Bearings Catalog

Download the most up-to-date version
at www.rexnord.com/documentation

Rexnord Bearings Catalog

Section Index

Page

SPHERICAL ROLLER BEARINGS

Units: Rex® **9**
- Features and Benefits 10
- Nomenclature 14
- Engineering 15
- Dimensions
  - Pillow Blocks 29
  - Flange Blocks 59
  - Cartridge Blocks 81
  - Take-up Blocks 93
  - Take-up Assemblies 101
  - Duplex Units 121
  - Unmounted Replacement Bearings 123
- Replacement Kits 129
- SHURLOK® Installation Tools 130

Units: Link-Belt® **131**
- Features and Benefits 132
- Nomenclature 134
- Engineering 135
- Dimensions
  - Pillow Blocks 141
  - Flange Blocks 159
  - Cartridge Blocks 171
  - Take-up Blocks 177
  - Take-up Assemblies 181
  - Take-up Frames 183
  - Unmounted Replacement Bearings 185
- Replacement Kits 189

Units: Rexnord® PT Select Series **191**
- Features and Benefits 192
- Nomenclature 193
- Engineering 194
- Dimensions
  - Pillow Blocks 198
  - Flange Blocks 201

Split Housings: Link-Belt **205**
- Features and Benefits 206
- Nomenclature 208
- Engineering 210
- Dimensions
  - Pillow Blocks 224
  - Take-up Assemblies 241
- Replacement Parts 243

Link-Belt **255**
- Features and Benefits 256
- Nomenclature 257
- Engineering 258
- Dimensions
  - Unmounted Bearings 274
  - Single-Row 282
  - Double-Row 283

Page

BALL BEARINGS

Standard Duty (200 Series)

Units: Link-Belt **285**
- Features and Benefits 286
- Nomenclature 288
- Engineering 290
- Dimensions
  - Pillow Blocks 299
  - Flange Blocks 321
  - Take-up Blocks 359
  - Hanger Units 366
  - Take-up Assemblies 369
  - Take-up Frames 373
  - Hanger and Trough Units 377
  - Unmounted Replacement Bearings 379

Medium Duty (200 Series)

Units: Link-Belt **399**
- Features and Benefits 400
- Nomenclature 402
- Engineering 404
- Dimensions
  - Pillow Blocks 409
  - Flange Blocks 411
  - Take-up Blocks 417
  - Hanger Units 419
  - Unmounted Replacement Bearings 421

Heavy Duty (300 Series)

Units: Link-Belt **423**
- Features and Benefits 424
- Nomenclature 425
- Engineering 426
- Dimensions
  - Pillow Blocks 431
  - Flange Blocks 436
  - Cartridge Blocks 442
  - Take-up Blocks 445
  - Take-up Frames 447
  - Unmounted Replacement Bearings 448
- SHURLOK Installation Tools 452

Units: Klean-Gard™ & Dura-Klean™ **453**
- Features and Benefits 454
- Nomenclature 455
- Engineering 456
- Dimensions
  - Klean-Gard Pillow Blocks 459
  - Klean-Gard Flange Blocks 460
  - Dura-Klean Pillow Blocks 463
  - Dura-Klean Flange Blocks 465
  - Dura-Klean Take-up Blocks 468
- Klean-Gard Accessory Kits 469

CYLINDRICAL ROLLER BEARINGS

Link-Belt **471**
- Features and Benefits 472
- Nomenclature 473
- Engineering 474
- Dimensions
  - Single Row 491
  - Double Row 499

Page

FILAMENT BEARINGS

Standard Sleeves: Rex RPT **501**
- Features and Benefits 502
- Nomenclature 503
- Engineering 504
- Dimensions
  - Straight Sleeve 506

Custom: Duralon® **513**
- Features and Benefits 514
- Nomenclature 515
- Engineering 516
- Dimensions
  - Sleeve 517
  - Annular 524
  - Flange 525
  - Thrust Washers 526
  - Annular 527
  - Mounting 528

SLEEVE BEARINGS

Rigid: Link-Belt **531**
- Features and Benefits 532
- Nomenclature 533
- Engineering 534
- Dimensions
  - Pillow Block 539
  - Flange Blocks 545
  - Take-up Assemblies 546
- Replacement Parts 547

Flex Block: Link-Belt **551**
- Features and Benefits 552
- Nomenclature 553
- Engineering 554
- Dimensions
  - Pillow Blocks 557
  - Flange Blocks 558
  - Take-up Frames 560

ENGINEERING INFORMATION

- Vibration Information 562
- Shaft Size Tolerance 564
- Setscrew Torque 565
- Bearing Selection 567

Quick Reference Tables

Rex Roller Bearings											
		Pillow Block	Page	Flange Units	Page	Piloted Flange Cartridge	Page	Steel Cartridge	Page	Cast Iron Cartridge	Page
SETSCREW MOUNT	2000	ZA, ZAS, ZA-72, ZAS-72, ZEP, ZEPS	34 42 48	ZB, ZBS, ZEF	59	ZBR	74	ZCS	81	ZMC	86
SETSCREW MOUNT	5000	ZAF, ZAFS, ZA, ZAS, ZA-72, ZAS-72, ZEP, ZEPS, ZP, ZPS	29 37 44 55 47	ZB, ZBS, ZF, ZFS, ZEF	62 65 71	ZBR	77	ZCS	83	ZMC	89
ECCENTRIC CAM MOUNT	3000	ZA, ZAS, ZA-72, ZAS-72, ZEP, ZEPS	36 43 54	ZB, ZBS, ZEF	61 70	ZBR	76	ZCS	82	ZMC	88
ADAPTER MOUNT	6000	ZAF, ZAFS, ZA, ZAS, ZA-72, ZAS-72, ZEP, ZEPS, ZP, ZPS	31 37 45 57 49	ZB, ZBS, ZF, ZFS, ZEF	63 67 72	ZBR	79	ZCS	84	ZMC	91
ADAPTER MOUNT	9000	ZA, ZAS, ZA-72, ZAS-72, ZEP, ZEPS, ZP, ZPS	41 46 58 51	ZB, ZBS, ZF, ZFS, ZEF	64 68 73	ZBR	80	ZCS	85	ZMC	92

Rex Roller Bearings (continued)									
		Take-up Block	Page	Take-up Frame Assemblies	Page	Duplex Units	Page	Replacement Inserts	Page
SETSCREW MOUNT	2000	ZT	93	ZNT ZAT	109 116	ZD	121	2000U	123
SETSCREW MOUNT	5000	ZT	93	ZHT ZST ZNT ZFT ZGT	101 107 112 118 119	ZD	122	5000U	126
ECCENTRIC CAM MOUNT	3000	ZT	95	ZNT ZAT	111 117			3000U	125
ADAPTER MOUNT	6000	ZT	95	ZHT ZNT	104 114			6000U	127
ADAPTER MOUNT	9000	ZT	99					9000U	128

Quick Reference Tables

Link-Belt Roller Bearings													
		Pillow Block - 2 Bolt	Page	Pillow Block - 4 Bolt	Page	Flange Units	Page	Piloted Flange Cartridge	Page	Steel Cartridge	Page	Cast Iron Cartridge	Page
SETSCREW MOUNT	B22400	PB, PEB, PKB, PKEB, EPB, EPEB	141 147 153	PB, PEB, PKB, PKEB, EPB, EPEB	143 149 154	FB, FEB, EFRB, FBB	159 162 165	FCB	167	CSEB	171	CB	175
	B22500	PB, PEB, EPB, EPEB	144 155	PB, PEB, PKB, PKEB, EPB, EPEB	144 150 155	EFB	163			CSEB	173		
ADAPTER MOUNT	B22600	PB, PEB, PKB, PKEB, EPB, EPEB	145 151 156	PB, PEB, PKB, PKEB, EPB, EPEB	146 152 157	FB, FEB, EFB, FBB	161 164 166	FCB	169	CSEB	174	CB	176

Link-Belt Roller Bearings (continued)							
		Take-up Block	Page	Take-up Frame Assemblies	Page	Replacement Inserts	Page
SETSCREW MOUNT	B22400	TB ETB	177 179	DSB	181	B400L	185
	B22500			DSHB	182	B500L	187
ADAPTER MOUNT	B22600	TB	178			B600L	188

Quick Reference Tables

Link-Belt Ball Bearings															
		Pillow Block	**Page**	**Tapped Base**	**Page**	**Stamped Pillow Block**	**Page**	**2-Bolt Flange**	**Page**	**4-Bolt Flange**	**Page**	**3-Bolt Flange Bracket**	**Page**	**Piloted Flange Cartridge**	**Page**
SETSCREW MOUNT	S200	P3S PL3S	305 311	PT3S	314	PSS	318	FX3S	326	F3S	333	FB3S	335	FC3S	341
	U200	P3U PH3U PL3U	302 307 309	PT3U	313	PSU	316	FX3U	324	F3U	330	FB3U	334	FC3U	339
	MS200	MPS	410					MFXS	412	MFS	414			MFCS	416
	U300	PU, PEU P2U	433 434							FU, FEU	438			FCU, FCEU	441
ECCENTRIC CAM MOUNT	W200	P3W PL3W	304 310			PSW	317	FX3W	325	F3W	332				
	Y200	P3Y PH3Y PL3Y	301 306 308			PSY	315	FX3Y	323	F3Y	329			FC3Y	338
	Y300	PLY	435												
CONCENTRIC MOUNT	CL200	P3CL	299	PT3CL	312			FX3CL	321	F3CL	327			FC3CL	336
	MCL200	MPCL	409					MFXCL	411	MFCL	413			MFCCL	415
ADAPTER MOUNT	A300	PA, PEA	431							FA, FEA	436			FCA, FCEA	439
	U3K00	PU3K, PEU3K	432							FU3K, FEU3K	437			FCU3K, FCEU3K	440

Quick Reference Tables

Link-Belt Ball Bearings (continued)

		2 & 3-Bolt Ductile Iron	Page	Take-up Blocks	Page	Hanger Bearings	Page	Take-up Assmblies	Page	Cartridge Bearing	Page
SETSCREW MOUNT	S200			TH3S	365	CHBS EHB	366 367				
	U200	FXU, FXUG FXRU, FXRUG FU, FUG FRU, FRUG	343 346 349 352	T3U TH3U	360 364	HM3	377	TAS3 TDS3 NT3	369 370 372		
	MS200			MTHS	418	MCHBS MEHBS	419 420				
	U300			TU	446					CU, CEU	444
ECCENTRIC CAM MOUNT	W200	FXW, FXWG FXRW, FXRWG FW, FWG FRW, FRWG	344 347 350 353								
	Y200	FXY, FXYG FXRY, FXRYG FY, FYG FRY, FRYG	342 345 348 351	T3Y TH3Y	359 363						
	Y300										
CONCENTRIC MOUNT	CL200			TH3CL	361						
	MCL200			MTHCL	417						
ADAPTER MOUNT	A300			TA	445					CA, CEA	442
	U3K00									CU3K, CEU3K	443

Alphabetical Index

Series Number	Page
25 mm, 30 mm, 35 mm, 40 mm Bores	491
25 mm thru 95 mm Bores	499
45 mm, 50 mm, 55 mm Bores	492
60 mm, 65 mm, 70 mm Bores	493
75 mm, 80 mm, 85 mm Bores	494
90 mm, 95 mm, 100 mm Bores	495
105 mm, 110 mm, 120 mm Bores	496
130 mm, 140 mm, 150 mm Bores	497
160 mm, 170 mm, 180 mm, 190 mm, 200 mm Bores	498
1000, 1000Z	539
1100	540
2000U	123
3000U	125
3200F	559
3200FX	558
3200P	557
5000U	126
6000U	127
9000U	128
21200, 21200Z	541
21300	542
21400, 21400Z, 2K1400Z	543
21500, 21500Z	544
22200LB, 22200LBK	274
22300LB, 22300LBK	276
23000LB, 23000LBK	278
23100LB, 23100LBK	279
23200LB, 23200LBK	280
23900LB, 23900LBK	281
A	
A20000	283
A20000M	284
A20000S	282
AG300L	448
B	
B400L	185
B500L	187
B600L	188
BPLB6800	228
C	
CA300, CEA300	442
CB22400	175
CB22600	176
CHBS200	366
CLG200NL	379
CSEB22400	171
CSEB22500	173
CSEB22600	174
CU3K00, CEU3K00	443
CU300, CEU300	444
D	
DSB2800	546
DSB22400	181
DSHB22500	182
DSLB6800	241

Series Number	Page
E	
EFB	202
EFB22500	163
EFB22600	164
EFRB22400	162
EHBS200	367
EP2B	200
EPB22400, EPEB22400	153
EPB22400F, EPEB22400F	154
EPB22500, EPEB22500, EPB22500F, EPEB22500F	155
EPB22600, EPEB22600	156
EPB22600F, EPEB22600F	157
ER	391
ER-K	390
ER-KCL	389
ETPB22400	179
F	
F3CL200	327
F3S200	333
F3U200	330
F3W200	332
F3Y200	329
F2200, F2200Z	545
FA300, FEA300	436
FB	201
FB3S200	335
FB3U200	334
FB22400, FEB22400	159
FB22600, FEB22600	161
FBB22400	165
FBB22600	166
FC	203
FC3CL200N	336
FC3S200	341
FC3U200	339
FC3Y200	338
FCA300, FCEA300	439
FCB22400	167
FCB22600	169
FCU3K00, FCEU3K00	440
FCU300, FCEU300	441
FF200	378
FRU200, FRUG200	352
FRW200, FRWG200	353
FRY200, FRYG200	351
FU3K00, FEU3K00	437
FU200, FUG200	349
FU300, FEU300	438
FW200, FWG200	350
FX3CL200	321
FX3S200	326
FX3U200	324
FX3W200	325
FX3Y200	323
FXRU200, FXRUG200	346
FXRW200, FXRWG200	347
FXRY200, FXRYG200	345
FXU200, FXUG200	343
FXW200, FXWG200	344
FXY200, FXYG200	342
FY200, FYG200	348

Series Number	Page
G	
GMSA, GMSB	357
H	
Hex	394
HM3U200	377
K	
KLFBSS200	462
KLFSS200	461
KLFXSS200	460
KLPSS200	459
L	
LC	373
LC	560
LHD FRAME	183
LHD FRAME	447
M	
MCHBS200	419
MCLG200NLPA	421
MEHBS200	420
MFCCL200N	415
MFCL200N	413
MFCS200N	416
MFS200N	414
MFXCL200N	411
MFXS200	412
MPCL200N	409
MPS200N	410
MSG200NLPA	422
MSL	392
MSLN	393
MS, MSC	356
MST	354
MSTR	355
MTHCL200N	417
MTHS200N	418
N	
NT3U200	372

Alphabetical Index

Series Number	Page
P	
P2B	198
P2U300	434
P3CL200N	299
P3S200	305
P3U200	302
P3W200	304
P3Y200	301
P4B	199
PA300, PEA300	431
PB22400F, PEB22400F	143
PB22400, PEB22400	141
PB22500, PEB22500, PB22500F, PEB22500F	144
PB22600F, PEB22600F	146
PB22600, PEB22600	145
PH3U200	307
PH3Y200	306
PKB22400F, PKEB22400F	149
PKB22400, PKEB22400	147
PKB22500F, PKEB22500F	150
PKB22600F, PKEB22600F	152
PKB22600, PKEB22600	151
PKLB6800FD8	231
PKLB6800F, PKLB6600F	229
PKLB7800F, PKLB7600F	234
PL3S200	311
PL3U200	309
PL3W200	310
PL3Y200	308
PLB6800D8,PLB6800FD8,PLB6600FD8	227
PLB6800, PLB6800F, PLB6600F	224
PLB6900,PLB6900F, SAF22600	232
PLB7800, PLB7800F, PLB7600F	233
PLB7900, PLB7900F, SAF22300	235
PLB23000K	236
PLB23100	238
PLB23100K	237
PLB23200	240
PLB23200K	239
PLY300	435
PPCL200	319
PPU200	320
PSS200	318
PSU200	316
PSW200	317
PSY200	315
PT3CL200N	312
PT3S200	314
PT3U200	313
PU3K00, PEU3K00	432
PU300, PEU300	433
R	
Round	395
S	
SG200ELPA	388
Square	397
T	
T3U200	360
T3Y200	359
TA300	445
TAS3U200	369
TB22400	177
TB22600	178
TDS3U200	370
TH3CL200	361
TH3S200	365
TH3U200	364
TH3Y200	363
TP, TPT, TSP, TSPT	374
TQP	375
TU300	446
U	
U200, UB200	383
UG3K00L	449
UG200, UBG200	384
UG300L	450
W	
W200, WB200	386
WF3S200	466
WFB3S200	467
WFX3S200	465
WG200, WBG200	387
WP3S200	463
WPT3S200	464
WTH3S200	468
Y	
Y200, YB200	381
YG200, YBG200	382
YG300	451
Z	
ZA2000-72, ZAS2000-72	42
ZA2000, ZAS2000	34
ZA3000-72, ZAS3000-72	43
ZA3000, ZAS3000	36
ZA5000-72, ZAS5000-72	44
ZA5000, ZAS5000	37
ZA6000-72, ZAS6000-72	45
ZA6000, ZAS6000	39
ZA9000-72, ZAS9000-72	46
ZA9000, ZAS9000	41
ZAF5000, ZAFS5000	29
ZAF6000, ZAFS6000	31
ZAT2000	116
ZAT3000	117
ZB2000, ZBS2000	59
ZB3000, ZBS3000	61
ZB5000, ZBS5000	62
ZB6000, ZBS6000	63
ZB9000, ZBS9000	64
ZBR2000	74
ZBR3000	76
ZBR5000	77
ZBR6000	79
ZBR9000	80
ZCS2000	81
ZCS3000	82
ZCS5000	83
ZCS6000	84
ZCS9000	85
ZD2000	121
ZD5000	122
ZEF2000	69
ZEF3000	70
ZEF5000	71
ZEF6000	72
ZEF9000	73
ZEP2000, ZEPS2000	52
ZEP3000, ZEPS3000	54
ZEP5000, ZEPS5000	55
ZEP6000, ZEPS6000	57
ZEP9000, ZEPS9000	58
ZF5000, ZFS5000	65
ZF6000, ZFS6000	67
ZF9000, ZFS9000	68
ZFT5000	118
ZGT5000	119
ZHT5000	101
ZHT6000	104
ZLF6000	33
ZMC2000	86
ZMC3000	88
ZMC5000	89
ZMC6000	91
ZMC9000	92
ZNT2000	109
ZNT3000	111
ZNT5000	112
ZNT6000	114
ZP5000, ZPS5000	47
ZP6000, ZPS6000	49
ZP9000, ZPS9000	51
ZST5000	107
ZT2000	93
ZT3000	95
ZT5000	96
ZT6000	98
ZT9000	99

Spherical Roller Bearings Units: Rex

Contents

	Page
Features and Benefits	10
Nomenclature	14
Engineering	15
Dimensions	
Pillow Blocks	29
Flange Blocks	59
Cartridge Blocks	81
Take-up Blocks	93
Take-up Assemblies	101
Duplex Units	121
Unmounted Replacement Bearings	123
Replacement Kits	129
SHURLOK Installation Tools	130

Industries Served

Mining
Forest Products
Aggregates
Steel
Air Handling
Construction
Package Handling

Rex Spherical Roller Bearings

Easy Bearing Clearance Adjustment
Can be field adjusted to meet application needs.

Replaceable Bearing
Available in single set collar, double set collar, eccentric lock and adapter mounting to suit load and installation requirements.

Shaft Ready
Pre-lubricated with our standard grease for normal operation; other lubricants available for special conditions.

Super-finished Raceways
Super-finished raceways provide a cool running, quiet, high-speed and high-load capacity bearing.

Rugged Housing
Standard material — cast iron. Steel or ductile iron available on request.

Multiple Housing Styles
Providing mounting features to match the operational and structural requirements.

Interchangeable Seals – Seal Types

Type Z Seal Clearance

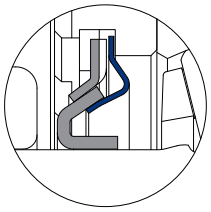

Denoted with a “Z” prefix in the model number. The standard seal used in the majority of applications.

- No frictional drag — generates no heat
- No speed limitations
- All metal — no temperature limitations

Type K Seal Light Contact

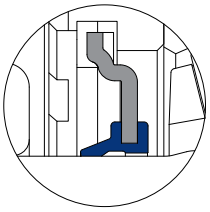

Substitute prefix “K” for “Z” in model number. Molded nitrile rubber lip seals out contaminants.

- Protects against contaminants
- Handles high speeds and vibration
- Less drag and heat generation than heavy contact seals

Type G Triple Lip Seal

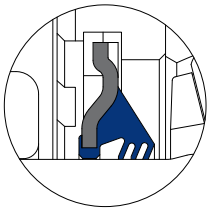

Substitute prefix “G” for “Z” in model number. Premium elastomer, heavy contact, triple lip seal.

- Protects against fine particles and moisture
- Three contacting lips provide constant contact even during misalignment
- Metal outboard guard protects inner seal lips from abrasion and damage

Type M Seal Heavy Contact

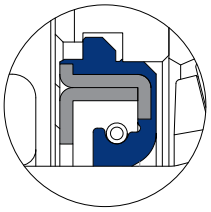

Substitute prefix “M” for “Z” in model number. Premium elastomer, spring loaded contact lip.

- Protects against liquids and grit
- Spring loaded lip assures constant contact, even during misalignment
- Molded-in garter spring retains seal in housing
- Seals in lubricant on horizontal and vertical shafts
- Available in Viton® material

Auxiliary Cap Seals

- Recommended for severe environments
- Provide supplemental protection for the primary seal
- Seals against liquids and gritty contaminants. Particularly effective against water washdown, taconite, cement, sand or caking build-up
- Provides safety, encloses rotating mounting hardware
- Protects primary seal from physical damage
- May be filled with grease to provide purging action
- Available as open or closed end cap

- Use “CB” Suffix in model number
- Protects from rotating shaft exposure and Foreign material penetration

Integral Self-Alignment

Our bearings represent the continuation of 80 years of bearing technology and experience. This design allows the inner race to misalign freely in any direction up to 4° of total misalignment.

By design, these bearings accept both radial and thrust loads under static, oscillatory, or dynamic conditions. The load is taken on the roller raceways, not the roller ends. This means that when thrust is loaded up to their allowable limit, **the bearings do not exhibit roller end wear.**

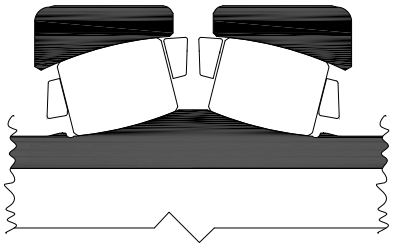

Featuring SHURLOK Adapter Mounts – Taking the Mystery Out of Mounting

Auxiliary end caps and four field interchangeable seal options ensure long bearing life through a full range of applications.

Self-aligning spherical roller bearing provides a total of 4° static and dynamic misalignment.

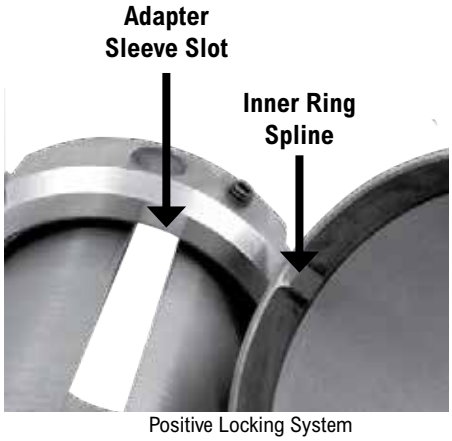

Positive Locking System

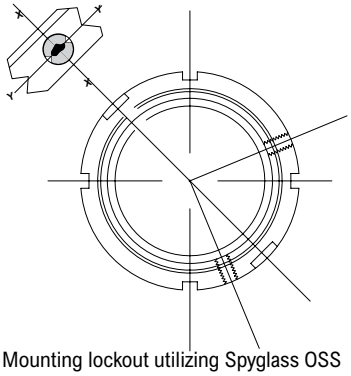

Mounting lockout utilizing Spyglass OSS

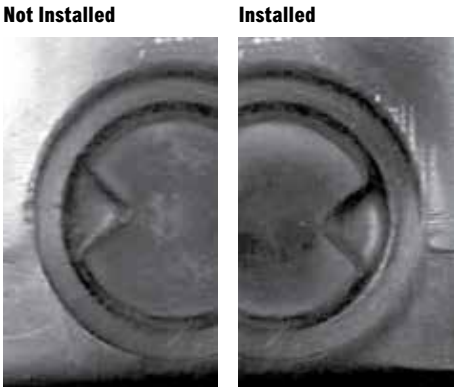

Easy Installation: Simply tighten the locknut until the Spyglass shows proper indication

6000 Series SHURLOK Roller Bearings are Also Available with These Housings

Pillow Block

Flanged Units

Flanged Cartridge

Take-up Units

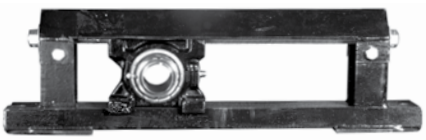

Take-up Assemblies

Shaft Mounting Styles

The following five mounting styles are available in any housing style.

2000 Series
Single Set Collar

- Normal duty
- Simplest installation
- Most economical

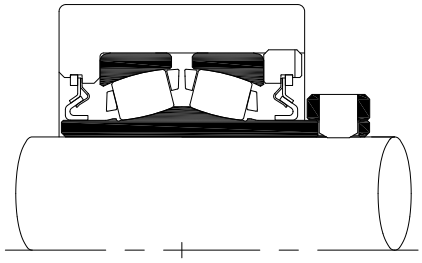

3000 Series Twist Lock™
Eccentric Locking Collar

- Medium duty
- Additional shaft holding power
- Accommodates undersized shafting
- Economical

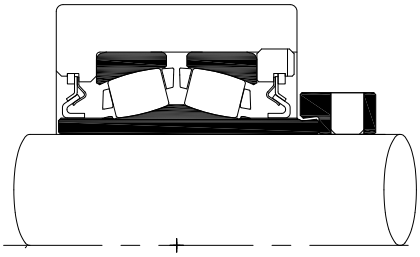

5000 Series
Double Set Collar

- Heavy duty
- Increased shaft holding power and stability
- Moderate cost

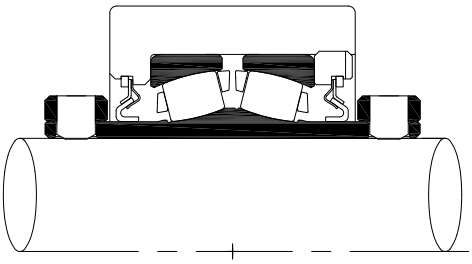

6000 Series
SHURLOK Adapter Mount

- Heavy duty
- Spyglass Optical Strain Sensor (OSS) Technology
- Full bore contact for maximum shaft holding power, concentricity and running accuracy
- Accommodates undersized shafting
- Easily removable

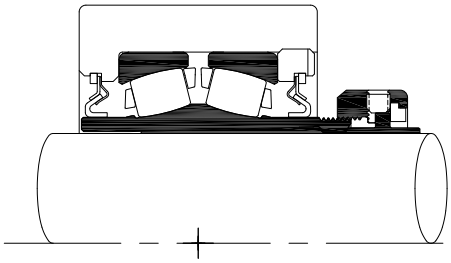

9000 Series
Adapter Mount

- Extra heavy duty
- Full bore contact for maximum shaft holding power, concentricity and running accuracy
- Accommodates undersized shafting

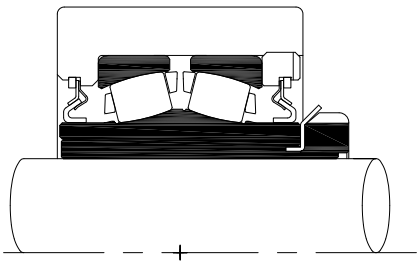

Nomenclature

A Z A - 2 207 F

Symbol	Description
A	Two open auxiliary end caps
AB	One open auxiliary end cap on locknut side, one closed on housing side
B	Two auxiliary end caps (open on housing side, closed on threaded cover side)
BA	One open auxiliary end cap on housing side, one closed on locknut side
X	Designates "SPECIAL UNITS", contact Rexnord Industries
Z	Clearance seal
K	Light contact seal
M	Heavy contact seal
G	Triple Lip Seal
A	Pillow block, fixed
AS	Pillow block, floating
AF	Pillow block, fixed SAF interchange
AFS	Pillow block, floating SAF interchange
LF	Split pillow block, fixed SAF interchange
LFS	Split pillow block, floating SAF interchange
P	Pillow block, fixed
PS	Pillow block, floating
EP	Pillow block, fixed Type E interchange
EPS	Pillow block, floating Type E interchange
B	Flanged block, fixed 4-bolt
BS	Flanged block, floating 4-bolt
EF	Flanged block, fixed 4-bolt Type E interchange
F	Flanged block, fixed 4 or 6-bolt
FS	Flanged block, floating 4 or 6-bolt
BR	Flanged cartridge block, fixed 4-bolt round
CS	Cartridge block, steel housing
MC	Cartridge block, cast iron housing
D	Duplex unit
N	Take-up block for protected screw frame
T	Take-up block for center pull frame
AT	Center pull take-up assembly
NT	Protected screw take-up assembly
HT	Center pull take-up assembly
FT	Elevator boot end take-up assembly
GT	Elevator head end take-up assembly
ST	Center pull spring loaded take-up assembly
11	Size code – only for take-up blocks and assemblies
2	2000 Series, single set collar
3	3000 Series, eccentric locking collar
5	5000 Series, double set collar
6	6000 Series, SHURLOK tapered adapter sleeve
9	9000 Series, tapered adapter sleeve
207	2 7/16" – last two digits in 16th of an inch
100MM	100 millimeters
24	Inches of take-up adjustment – only for take-up assemblies
A	One open auxiliary end cap (threaded cover side)
B	One closed auxiliary end cap (threaded cover side)
C	Closed end cap housing side
CB	Closed end cap collar side
F	4-bolt housing (pillow blocks only)
G	Face locked threaded cover
H	Reverse assembly
PL	Precision bore diamter and bore roundness
R	Tight fit of outer races in housing (high vibration, shock loading)
S	Machined pilot on face of flanged units
V	Viton seal material (when M seal suffix is used)
Y	Redesigned shaft size – not interchangeable
04	C5 internal clearance (high temperature)
05	C4 internal clearance (high speed)
06	C0 internal clearance
07	C2 internal clearance
40	Preservative only, no lubrication in unit
42	Grease designation for Chevron SRI #2
43	Grease designation for Mobilith SHC460
63	Grease designation for Mobilith SHC100
66	Housing drilled both sides for aux caps
72	Steel housing
78	Steel retainers
82	Inner race with Rexlon lined bore - Teflon™▼ material

▼ Teflon™ is a trademark of The Chemours Company FC, LLC used under license by Toray Flurofibers (America), Inc.

Seal Rating Guide

Application Conditions	Seal Ratings					
	Clearance	Light Contact	Heavy Contact	Viton	Triple Lip	Auxiliary Cap Consideration
	Z	K	M	M	G	
Shaft position						
Horizontal Shaft	4	4	4	4	4	
Veritcal Shaft	1	3	4	4	4	
Operating Temperature						
Below -40°F	4	1	1	2	1	
-40°F to 0°F	4	3	3	4	3	
0°F to +250°F	4	4	4	4	4	
+250°F to +400°F	4	0	0	4	0	
Over 400°F	4	0	0	0	0	
Speed						
Equal to / Less than limit below	4	4	4	4	4	
More than limit below	4	1	1	1	1	
Vibration/Shock						
Occasional - Mild	3	4	4	4	4	
Occasional - Severe	2	4	4	4	4	
Continuous - Mild	1	4	3	3	3	
Continuous - Severe	0	4	3	3	3	
Abrasive Material						
Coarse - Over #10 Mesh	4	4	4	4	4	X
Small - #10 to #50 Mesh	3	4	4	4	4	X
Fine - #50 to #200 Mesh	1	3	4	4	4	X
Very fine - Under #200 Mesh	0	3	4	4	4	X
"Caking or buildup' (cement, etc.)	2	4	4	4	4	X
Moisture						
Splash	2	3	4	4	4	X
Rain	2	3	4	4	4	X
Saturated Atmosphere	1	3	4	4	4	X
Flooding	0	1	3	3	4	X
Pressure Wash	0	1	4	4	4	X
Fibrous Material						
Short Fibers (lint, etc.)	1	3	4	4	4	X
Long Fibers (grass, etc.)	1	3	4	4	4	X
Chemical						
Acid Fumes and Liquids	1	1	1	4	1	X
Alkaline Fumes and Liquids	1	1	1	4	1	X

To extend life in tough applications, our application experience indicates that special consideration should be given to the addition of Auxiliary Cap Seals in the areas shaded with and "X" on the chart.

Rating Code

4 - Excellent - Best seal for conditions listed.

3 - Good - Sealability is above average.

2 - Fair - Seal performs under intermittent conditions.

1 - Limited - Actual conditions must be known to evaluate sealability. Contact Rexnord for special assistance in the realm of materials and designs.

0 - Not acceptable - Will not effectively perform seal functions. Contact Rexnord for special assistance in the realm of materials and designs.

Seal Selection Guide

The choice of the seal for a mounted bearing is often the key to successful bearing operation and long service life. The SEAL SELECTION GUIDE incorporates years of Rexnord's experience against the wide variety of conditions encountered on actual applications. Following the simple selection procedure outlined can translate the benefits of that broad experience to the individual applications through the choice of the most effective seal.

How to Use the Selection Guide

1. The appropriate seal for a given application may be selected by comparing the job application conditions against those listed in the Seal Rating Guide on this page.
2. When more than one application condition is present, the most appropriate seal may be selected based on prime sealing for the most detrimental condition, and secondary consideration given to the other application conditions.
3. Addition of auxiliary caps will enhance the primary seal performance shown in the chart.

Considerations in Addition to Seal Selection

Under certain adverse conditions, other changes should be considered to achieve maximum bearing life:

A. High temperature lubricants where housing or ambient temperatures exceed +200°F,

B. Special greases for additional bearing protection where excessive water, solvents or chemicals are present.

C. EP (extreme pressure) greases where high load, high shock load, or continuous vibration is present.

D. Readjustment of internal operating clearance of bearing where extreme high or low temperature conditions exist.

Seal Speed Limit Table*

Size Code		2	3	4	5	6	7	8	9	10	11	12	13	14	15	16
Bearing Number	2000	2012 2012 2100	2102 2103 2104	2107 2108	2111 2112	2115 2200	2203 2204	2206 2207 2208	2211 2212 2215 2300	2303 2307 2308	2311 2315 2400					
	3000			3107	3111	3115	3203	3207 3208	3211 3215	3307 3308	3315					
	5000			5107	5108 5111	5115	5200 5203	5207	5208 5211 5215	5303 5307	5311 5315 5400	5403Y 5407Y	5415 5500	5507	5515 5600	5607 5615 5700
	6000			6107	6111	6115	6203	6206 6207	6211 6212 6215	6303 6307	6311 6315	6403Y 6407Y	6415	6507	6515	6607 6615
	9000						9115 9200	9203	9207 9208	9211 9215 9300	9303 9307	9311Y 9315Y 9400Y	9403 9407	9415 9500	9503 9507	9515 9600 9607
(RPM)	Z	6500	5750	5250	4450	4050	3650	3300	2800	2400	2050	1850	1600	1000	900	800
	K	4500	4000	3600	3100	2800	2500	2300	1900	1700	1400	N/A	N/A	N/A	N/A	N/A
	M	4400	3700	3300	2800	2500	2200	2000	1700	1400	1200	1100	1000	900	800	700
	G	N/A	2375	2175	1850	1675	1500	1350	1150	1000	850	775	650	N/A	N/A	N/A
Size Code		2	3	4	5	6	7	8	9	10	11	12	13	14	15	16

Refer to Seal Rating Guide shown above for speeds in excess of those listed in this table.

*Actual bearing speed limits are largely based upon the applied load and can be found on the Load Rating Table.

Selection Guide

To select a bearing, determine the applied radial load, the applied thrust load, the desired Rating Life, and applicable operating conditions. The procedure shown here will aid in selecting a bearing to meet an L_{10} design life. The formulas for calculating life expectancy should be used to determine the Rating Life L_{10} for the bearing selected.

The selection procedures and rating formulas shown here are in agreement with The American Bearing Manufacturers Association Standards and ANSI/ABMA STD 9-1990. Ratings are based on fatigue life. The Rating Life L_{10} or fatigue life at 90% reliability is the usual basis for bearing selection.

To assure a satisfactory bearing application, fitting practice, mounting, lubrication, sealing, static rating, housing strength, operating conditions and maintenance must be considered.

Steps for Selection

Step 1

Determine an appropriate L_{10} design life.

Type of service	Operating time, hours per year	Design life, years	L_{10} design life, hours
Light seasonal usage	500 to 750	3-5	3,000
Heavy seasonal usage	1,400 to 1,600	4-6	8,000
Industrial—8 hour shift	2,000	10	20,000
Industrial—16 hour shift	4,000	10	40,000
Industrial—continuous	8,700	10	80,000 to 100,000

Step 2

Determine a required $\left(\frac{C}{P}\right)$ from Table 1.

Step 3

Calculate the required C and select a roller bearing.

a For radial load only:

$P = F_r$

required $C = \left(\frac{C}{P}\right) P$ using $\left(\frac{C}{P}\right)$ from Step 2

Select a roller bearing from Table 2 with a basic load rating C equal to or greater than the required C.

Step 3 (continued)

b For combined radial and thrust loads:

Select a trial roller bearing of the desired shaft size from Table 2.

Calculate the ratio of thrust load Fa to the radial load Fr.

$$\frac{F_a}{F_r}$$

Calculate the equivalent radial load P

$$P = XFr + YFa$$

If $\frac{F_a}{F_r}$ is equal to or less than e, then $P = X1Fr + Y1Fa$

If $\frac{F_a}{F_r}$ is greater than e, then $P = X2Fr + Y2Fa$

For values of e, X1, Y1, X2, and Y2, see Table 2.

Calculate the required C

required $C = \left(\frac{C}{P}\right) P$ using $\left(\frac{C}{P}\right)$ from Step 2.

Consult Table 2, basic load rating. If a smaller bearing meets, or nearly meets, the required C, its life expectancy can be calculated.

Note: If the load P is greater than .25C, consult Rexnord Bearing Division.

Selection

Symbols for formulas:

C = basic load rating, pounds (or newtons)
Co = static load rating, pounds (or newtons)
e = a reference value
Fa = thrust load, pounds (or newtons)
Fr = radial load, pounds (or newtons)
L_{10} = rating life, hours
n = speed, revolutions per minute
P = equivalent radial load, pounds (or newtons)
X = radial factor
Y = thrust factor

Basic Formula

$$\left(\frac{C}{P}\right) = \left(\frac{L_{10} \times n \times 60}{1{,}000{,}000}\right)^{3/10}$$

$$L_{10} = \frac{\left(\frac{C}{P}\right)^{10/3} \times 1{,}000{,}000}{n \times 60}$$

Life Expectancy

To calculate the Rating Life L_{10} of any selected or trial bearing:

Step 1

Determine the equivalent radial load P.

a For radial load only:

$$P = Fr$$

b For combined radial and thrust load:

$$P = XFr + YFa$$

if $\frac{Fa}{Fr}$ is equal to or less than e, then

$$P = X1Fr + Y1Fa$$

if $\frac{Fa}{Fr}$ is greater than e, then

$$P = X_2F_r + Y_2F_a$$

For values of e, X1, Y1, X2, and Y2, consult the appropriate bearing rating Table 2.

Step 2

Calculate the ratio of the basic load rating C to the equivalent radial load.

$$\left(\frac{C}{P}\right)$$

Step 3

Approximate the bearing life from Table 1.

Life Adjustment

The Rating Life, L_{10}, may be modified for some applications in accordance with the formula

$$Ln = a_1a_2a_3L_{10}$$

where Ln = Adjusted life for (100-n) % reliablility,
a_1 = Life adjustment factor for reliability
a_2 = Life adjustment factor for material and processing
a_3= Life adjustment factor for operating conditions.

For most normal applications, all factors will be taken as 1, and the Rating Life used as the selection basis or life estimate. In addition, as long as standard catalog bearings are used, a_2 will be normally set equal to one.

The factor a_3 covers such things as lubrication, misalignment, and temperature. Some conditions that could yield a_3 significantly different than unity include speeds less than 20000 DN or greater than 200000 DN, temperatures below –40°F *(–40°C)* or above 275°F *(135°C)*. For other possible conditions, as well as additional information on life adjustment factors, consult Rexnord Bearing Division.

Table 1 • Relation of L_{10} life and speed to $\left(\frac{C}{P}\right)$

Bearing Life Hours L_{10}	Speed, n								
	50	100	200	300	400	500	600	700	800
3000	1.93	2.38	2.93	3.31	3.61	3.86	4.07	4.27	4.44
4000	2.11	2.59	3.19	3.61	3.93	4.20	4.44	4.65	4.84
5000	2.25	2.77	3.42	3.86	4.20	4.50	4.75	4.97	5.18
6000	2.38	2.93	3.61	4.07	4.44	4.75	5.02	5.25	5.47
8000	2.59	3.19	3.93	4.44	4.84	5.18	5.47	5.73	5.96
10000	2.77	3.42	4.20	4.75	5.18	5.54	5.85	6.12	6.37
12000	2.93	3.61	4.44	5.02	5.47	5.85	6.18	6.47	6.73
14000	3.07	3.78	4.65	5.25	5.73	6.12	6.47	6.77	7.05
16000	3.19	3.93	4.84	5.47	5.96	6.37	6.73	7.05	7.34
18000	3.31	4.07	5.02	5.66	6.18	6.60	6.97	7.30	7.60
20000	3.42	4.20	5.18	5.85	6.37	6.81	7.20	7.54	7.85
25000	3.65	4.50	5.54	6.25	6.81	7.29	7.70	8.06	8.39
30000	3.86	4.75	5.85	6.60	7.20	7.70	8.13	8.51	8.86
35000	4.04	4.97	6.12	6.92	7.54	8.06	8.51	8.92	9.28
40000	4.20	5.18	6.37	7.20	7.85	8.39	8.86	9.28	9.66
45000	4.36	5.36	6.60	7.46	8.13	8.69	9.18	9.61	10.00
50000	4.50	5.54	6.81	7.70	8.39	8.97	9.48	9.92	10.30
60000	4.75	5.85	7.20	8.13	8.86	9.48	10.00	10.50	10.90
70000	4.97	6.12	7.54	8.51	9.28	9.92	10.50	11.00	11.40
80000	5.18	6.37	7.85	8.86	9.66	10.30	10.90	11.40	11.90
90000	5.36	6.60	8.13	9.18	10.00	10.70	11.30	11.80	12.30
100000	5.54	6.81	8.39	9.48	10.30	11.00	11.70	12.20	12.70
150000	6.25	7.70	9.48	10.70	11.70	12.50	13.20	13.80	14.40
200000	6.81	8.39	10.30	11.70	12.70	13.60	14.40	15.00	15.70
	Speed, n								
	900	1000	1200	1500	1800	2400	3000	3600	6000
3000	4.60	4.75	5.02	5.36	5.66	6.18	6.60	6.97	8.13
4000	5.02	5.18	5.47	5.85	6.18	6.73	7.20	7.60	8.86
5000	5.36	5.54	5.85	6.25	6.60	7.20	7.70	8.13	9.48
6000	5.66	5.85	6.18	6.60	6.97	7.60	8.13	8.59	10.00
8000	6.18	6.37	6.73	7.20	7.60	8.29	8.86	9.36	10.90
10000	6.60	6.81	7.20	7.70	8.13	8.86	9.48	10.00	11.70
12000	6.97	7.20	7.60	8.13	8.59	9.36	10.00	10.60	12.30
14000	7.30	7.54	7.96	8.51	8.99	9.80	10.50	11.10	12.90
16000	7.60	7.85	8.29	8.86	9.36	10.20	10.90	11.50	13.40
18000	7.88	8.13	8.59	9.18	9.70	10.60	11.30	11.90	13.90
20000	8.13	8.39	8.86	9.48	10.00	10.90	11.70	12.30	14.40
25000	8.69	8.97	9.48	10.10	10.70	11.70	12.50	13.20	15.40
30000	9.18	9.48	10.00	10.70	11.30	12.30	13.20	13.90	16.20
35000	9.61	9.92	10.50	11.20	11.80	12.90	13.80	14.60	17.00
40000	10.00	10.30	10.90	11.70	12.30	13.40	14.40	15.20	17.70
45000	10.40	10.70	11.30	12.10	12.80	13.90	14.90	15.70	18.30
50000	10.70	11.00	11.70	12.50	13.20	14.40	15.40	16.20	18.90
60000	11.30	11.70	12.30	13.20	13.90	15.20	16.20	17.10	20.00
70000	11.80	12.20	12.90	13.80	14.60	15.90	17.00	17.90	20.90
80000	12.30	12.70	13.40	14.40	15.20	16.50	17.70	18.70	21.80
90000	12.80	13.20	13.90	14.90	15.70	17.10	18.30	19.40	22.60
100000	13.20	13.60	14.40	15.40	16.20	17.70	18.90	20.00	23.30
150000	14.90	15.40	16.20	17.30	18.30	20.00	21.40	22.60	26.30
200000	16.20	16.70	17.70	18.90	20.00	21.80	23.30	24.60	28.70

Table 2 • Load Ratings and Speed Limits

Size Code	Co Static load rating		C Basic load rating*		Approximate speed limit RPM				e	$\frac{F_a}{F_r} \le e$		$\frac{F_a}{F_r} > e$	
	newtons	pounds	newtons	pounds	Z seal	K seal	M seal	G seal		X1	Y1	X2	Y2
2	66279	14900	68147	15,320	6500	4500	4400	-	0.51	1.00	1.32	0.67	1.96
3	81402	18300	83849	18,850	5750	4000	3700	2375	0.48	1.00	1.40	0.67	2.09
4	92968	20900	88342	19,860	5250	3600	3300	2175	0.44	1.00	1.54	0.67	2.29
5	127664	28700	123750	27,820	4450	3100	2800	1850	0.45	1.00	1.51	0.67	2.24
6	147681	33200	128509	28,890	4050	2800	2500	1675	0.40	1.00	1.68	0.67	2.50
7	197501	44400	161782	36,370	3650	2500	2200	1500	0.40	1.00	1.68	0.67	2.50
8	237980	53500	192341	43,240	3300	2300	2000	1350	0.38	1.00	1.80	0.67	2.68
9	318048	71500	256885	57,750	2800	1900	1700	1150	0.38	1.00	1.79	0.67	2.66
10	403454	90700	375119	84,330	2400	1700	1400	1000	0.38	1.00	1.77	0.67	2.63
11	609406	137000	582584	130,970	2050	1400	1200	850	0.36	1.00	1.88	0.67	2.80
12	708602	159300	665009	149,500	1850	-	1100	775	0.33	1.00	2.02	0.67	3.00
13	1076025	241900	850055	191,100	1600	-	1000	650	0.37	1.00	1.81	0.67	2.70
14	1219258	274100	1021401	229,620	1000	-	900	-	0.38	1.00	1.78	0.67	2.66
15	1354928	304600	1104049	248,200	900	-	800	-	0.35	1.00	1.93	0.67	2.87
16	1759272	395500	1378326	309,860	800	-	700	-	0.33	1.00	2.07	0.67	3.09

*Values in table represent the 9000 and 6000 series bearings. When commercial grade shafting and clearance mounting are used, the table values should be reduced up to 5% for the 5000 series, 10% reduction for 3000 and reduced up to 15% for the 2000 series.

Adjustment Table

Size Code	Shaft Size (Inches)			Standard Factory Adjustment (Average Speed and Temperature)			Recommended Adjustment High Speeds				Clearance Adjustment Inches Per 15 Degrees	
	2000 Series	3000 Series	5000 Series	Standard Degrees Adjust	Standard Radial Clearance	Standard Axial Clearance	Speed Over	High Speed Degrees Adjust.	High Speed Radial Clearance	High Speed Axial Clearance	Radial	Axial
2	3/4 - 1	-	-	45	.0022-.0028	.0068-.0086	2000	55	.0028-.0034	.0086-.0105	0.001	0.003
3	1 1/8-1 1/4	-	-	50	.0024-.0030	.0078-.0098	2000	60	.0030-.0036	.0098-.0117	0.001	0.003
4	1 7/16-1 1/2	1 7/16	1 7/16	55	.0025-.0031	.0088-.0109	2000	65	.0031-.0037	.0110-.0130	0.001	0.003
5	1 11/16-1 3/4	1 11/16	1 1/2- 1 11/16	60	.0029-.0037	.0101-.0128	1500	70	.0037-.0045	.0128-.0156	0.001	0.003
6	1 15/16-2	1 15/16	1 15/16	85	.0033-.0041	.0127-.0157	1500	105	.0041-.0049	.0157-.0188	0.001	0.003
7	2 3/16-2 1/4	2 3/16	2-2 3/16	60	.0031-.0039	.0119-.0149	1250	75	.0039-.0047	.0150-.0180	0.001	0.003
8	2 3/8-2 1/2	2 7/16-2 1/2	2 7/16	65	.0032-.0040	.0131-.0163	1250	80	.0040-.0048	.0163-.0196	0.001	0.003
9	2 11/16-3	2 11/16-2 15/16	2 1/2-2 15/16	80	.0040-.0052	.0163-.0211	1250	100	.0052-.0064	.0211-.0259	0.001	0.004
10	3 3/16-3 1/2	3 7/16-3 1/2	3 3/16-3 7/16	100	.0050-.0064	.0201-.0257	1000	125	.0064-.0076	.0257-.0304	0.001	0.003
11	3 11/16-4	3 15/16	3 11/16-4	120	.0056-.0072	.0239-.0306	1000	150	.0072-.0088	.0306-.0373	0.001	0.003
12	-	-	4 3/16-4 1/2	80	.0059-.0075	.0241-.0306	750	100	.0075-.0091	.0306-.0371	0.001	0.005
13	-	-	4 15/16-5	90	.0069-.0087	.0288-.0362	750	115	.0087-.0105	.0362-.0436	0.001	0.005
14	-	-	5 7/16	90	.0075-.0094	.0305-.0381	500	120	.0094-.0113	.0381-.0457	0.001	0.006
15	-	-	5 15/16-6	120	.0087-.0110	.0380-.0479	500	150	.0110-.0133	.0480-.0578	0.001	0.005
16	-	-	6 7/16-7	150	.0094-.0122	.0439-.0568	500	180	.0122-.0150	.0569-.0697	0.001	0.005

Size Code	Shaft Size (Inches)	Standard Factory Adjustment (Average Speed and Temperature)					Recommended Adjustment High Speeds						Clearance Adjustment Inches Per 15 Degrees	
	6000 Series	Standard Factory Degrees Adjustment	Unmounted Radial Clearance	*Mounted Standard Radial Clearance	Unmounted Standard Axial Clearance	*Mounted Standard Axial Clearance	Speed Over	High Speed Deg. Adj.	Unmounted High Speed Radial Clearance	*Mounted High Speed Radial Clearance	Unmounted High Speed Axial Clearance	*Mounted High Speed Axial Clearance	Radial	Axial
4	1 7/16	65	.0031-.0037	.0027-.0032	.0110-.0130	.0094-.0111	2000	80	.0037-.0043	.0033-.0038	.0131-.0151	.0118-.0132	0.001	0.003
5	1 11/16	70	.0037-.0045	.0030-.0036	.0128-.0156	.0107-.0130	1500	95	.0045-.0053	.0039-.0046	.0156-.0183	.0134-.0158	0.001	0.003
6	1 15/16	105	.0041-.0049	.0036-.0043	.0157-.0188	.0135-.0161	1500	115	.0049-.0057	.0045-.0052	.0188-.0218	.0169-.0195	0.001	0.003
7	2 3/16	75	.0039-.0047	.0033-.0042	.0150-.0180	.0122-.0156	1250	85	.0047-.0055	.0042-.0051	.0180-.0210	.0156-.0191	0.001	0.004
8	2 3/8 - 2 7/16	80	.0040-.0048	.0033-.0042	.0163-.0196	.0133-.0168	1250	95	.0048-.0056	.0042-.0051	.0196-.0228	.0168-.0203	0.001	0.004
9	2 11/16 - 2 15/16	100	.0052-.0064	.0042-.0051	.0211-.0259	.0168-.0203	1250	120	.0064-.0076	.0054-.0063	.0260-.0307	.0214-.0249	0.001	0.004
10	3 3/16 - 3 7/16	125	.0064-.0076	.0055-.0063	.0257-.0304	.0214-.0249	1000	140	.0076-.0088	.0069-.0078	.0304-.0352	.0272-.0307	0.001	0.004
11	3 11/16 - 3 15/16	150	.0072-.0088	.0062-.0071	.0306-.0373	.0260-.0295	1000	170	.0084-.0100	.0079-.0087	.0357-.0423	.0330-.0365	0.001	0.004
12	4 3/16 - 4 7/16	100	.0075-.0091	.0056-.0068	.0306-.0371	.0252-.0304	750	115	.0091-.0107	.0072-.0083	.0371-.0435	.0321-.0373	0.001	0.005
13	4 15/16	115	.0087-.0105	.0071-.0084	0362-.0436	.0286-.0339	750	135	.0105-.0123	.0093-.0106	.0436-.0510	.0373-.0425	0.001	0.005
14	5 7/16	120	.0094-.0113	.0072-.0085	.0381-.0457	.0286-.0339	500	145	.0113-.0132	.0099-.0112	.0457-.0533	.0391-.0443	0.001	0.005
15	5 15/16	150	.0110-.0133	.0091-.0103	0480-.0578	.0391-.0443	500	180	.0133-.0156	.0115-.0128	.0579-.0677	.0495-.0547	0.001	0.005
16	6 7/16 - 6 15/16	180	.0122-.0150	.0107-.0119	.0569-.0697	.0495-.0547	500	220	.0150-.0178	.0130-.0141	.0697-.0825	.0599-.0651	0.001	0.005

Size Code	Shaft Size (Inches)	Standard Factory Adjustment (Average Speed and Temperature)					Recommended Adjustment High Speeds						Clearance Adjustment Inches Per 15 Degrees	
	9000 Series	Standard Factory Degrees Adjustment	Unmounted Radial Clearance	*Mounted Standard Radial Clearance	Unmounted Standard Axial Clearance	*Mounted Standard Axial Clearance	Speed Over	High Speed Deg. Adj.	Unmounted High Speed Radial Clearance	*Mounted High Speed Radial Clearance	Unmounted High Speed Axial Clearance	*Mounted High Speed Axial Clearance	Radial	Axial
7	1 15/16 - 2	75	.0039-.0047	.0031-.0039	.0150-.0180	.0119-.0149	1250	85	.0047-.0055	.0039-.0047	.0180-.0210	.0150-.0180	0.001	0.003
8	2 3/16	80	.0040-.0048	.0032-.0040	.0163-.0196	.0131-.0163	1250	95	.0048-.0056	.0040-.0048	.0196-.0228	.0163-.0196	0.001	0.003
9	2 7/16 - 2 1/2	100	.0052-.0064	.0040-.0052	.0211-.0259	.0163-.0211	1250	120	.0064-.0076	.0052-.0064	.0260-.0307	.0211-.0259	0.001	0.004
10	2 11/16 - 2 15/16	125	.0064-.0076	.0050-.0064	.0257-.0304	.0201-.0257	1000	140	.0076-.0088	.0064-.0076	.0304-.0352	.0257-.0304	0.001	0.003
11	3 3/16 - 3 7/16	150	.0072-.0088	.0056-.0072	.0306-.0373	.0239-.0306	1000	170	.0084-.0100	.0072-.0088	.0357-.0423	.0306-.0373	0.001	0.003
12	3 11/16 - 4	100	.0075-.0091	.0059-.0075	.0306-.0371	.0241-.0306	750	115	.0091-.0107	.0075-.0091	.0371-.0435	.0306-.0371	0.001	0.005
13	4 3/16 - 4 7/16	115	.0087-.0105	.0069-.0087	0362-.0436	.0288-.0362	750	135	.0105-.0123	.0087-.0105	.0436-.0510	0362-.0436	0.001	0.005
14	4 15/16 - 5	120	.0094-.0113	.0075-.0094	.0381-.0457	.0305-.0381	500	145	.0113-.0132	.0094-.0113	.0457-.0533	.0381-.0457	0.001	0.006
15	5 3/16 - 5 7/16	150	.0110-.0133	.0087-.0110	0480-.0578	.0380-.0479	500	180	.0133-.0156	.0110-.0133	.0579-.0677	0480-.0578	0.001	0.005
16	5 15/16 - 6 7/16	180	.0122-.0150	.0094-.0122	.0569-.0697	.0439-.0568	500	220	.0150-.0178	.0122-.0150	.0697-.0825	.0569-.0697	0.001	0.005
16	6 7/16 - 6 15/16	180	.0122-.0150	.0107-.0119	.0569-.0697	.0495-.0547	500	220	.0150-.0178	.0130-.0141	.0697-.0825	.0599-.0651	0.001	0.005

*Mounted clearance result of tightening tapered adapter

Table 3 • Rex Size Code Interchange Table

Shaft Size	REX 2000 Single Set Collar Bearing Number	REX 3000 Twist Lock Eccentric Lock Bearing Number	REX 5000 Double Set Collar Bearing Number	REX 6000 SHURLOK Tapered Adapter Bearing Number	REX 9000 Tapered Adapter Bearing Number	Size Code	Approx Outer Race Dia.
3/4 15/16 *25 mm* 1	2012 2015 *2025MM* 2100					2	2.370
1-1/8 *30 mm* 1-3/16 1-1/4	2102 *2030MM* 2103 2104					3	2.630
35 mm 1-7/16 1-1/2	*2035MM* 2107 2108	3107	5107	6107		4	2.830
1-1/2 *40 mm* 1-11/16 1-3/4 *45 mm*	*2040MM* 2111 2112 *2045MM*	3111	5108 *5040MM* 5111	6111		5	3.340
1-15/16 *50 mm* 2	2115 *2050MM* 2200	3115	5115 *5050MM* 8200	6115 *6045MM*		6	3.540
50 mm 1-15/16 2 *55 mm* 2-3/16 2-1/4	*2055MM* 2203 2204	3203	5200 *5055MM* 5203	*6050MM* *6055MM* 6203	*9050MM* 9115 9200	7	3.940
55 mm 2-3/16 *60 mm* 2-3/8 2-7/16 2-1/2 *65 mm*	*2060MM* 2206 2207 2208 *2065MM*	3207 3208	*5060MM* 5207 *5065MM*	*6060MM* 6206 6207	*9055MM* 9203	8	4.320
2-7/16 2-1/2 *65 mm* 2-11/16 2-3/4 *70 mm* 2-15/16 *75 mm* 3	2211 2212 *2070MM* 2215 *2075MM* 2300	3211 3215	5208 5211 *5070MM* 5215 *5075MM* 8300	*6065MM* 6211 6212 *6070MM* 6215 *6075MM*	9207 9208	9	5.120
2-11/16 2-15/16 3 *75 mm* *80 mm* 3-3/16 *85 mm* 3-7/16 3-1/2 *90 mm*	*2080MM* 2303 *2085MM* 2307 2308 *2090MM*	3307 3308	*5080MM* 5303 *5085MM* 5307 8308 *5090MM*	*6080MM* 6303 *6085MM* 6307	9211 9215 9300 *9075MM*	10	5.900
80 mm 3-3/16 3-7/16 3-1/2 *90 mm* 3-11/16 *100 mm* 3-15/16 4	2311 *2100MM* 2315 2400	3315	5311 *5100MM* 5315 5400	*6090MM* 6311 *6100MM* 6315	*9080MM* 9303 9307 9308	11	7.090
3-11/16 3-15/16 4 4-3/16 *110 mm* 4-7/16 4-1/2 *115 mm*			5403Y *5110MM* 5407Y 5408Y *5115MM*	6403Y *6110MM* 6407Y	9311Y 9315Y 9400Y	12	7.680
4-3/16 4-7/16 *125 mm* 4-15/16 5 *130 mm*			*5125MM* 5415 5500 *5130MM*	*6125MM* 6415	9403 9407	13	9.050
4-15/16 5 5-7/16 *140 mm*			5507 *5140MM*	6507	9415 9500	14	10.630
5-3/16 5-7/16 *150 mm* 5-15/16 6 *160 mm*			*5150MM* 5515 5600 *5160MM*	6515	9503 9507	15	11.420
5-15/16 6 6-7/16 6-1/2 6-15/16 7 *180 mm*			5607 5608 5615 5700 *5180MM*	6607 6615	9515 9600 9607	16	12.600

Table 4 • Radial Load Ratings in Pounds at Various RPM for Appropriate L_{10} Life Hours

Size Code	L_{10} Minimum Life Hours	Speed, RPM																	
		50	100	200	300	400	500	600	700	800	900	1000	1200	1500	1800	2000	2500	3000	3500
2	8000	*	*	*	3449	3164	2959	2802	2675	2570	2481	2404	2276	2128	2015	1952	1826	1729	1651
	20000	*	3643	2959	2620	2404	2248	2128	2032	1952	1885	1826	1729	1617	1531	1483	1387	1313	1254
	40000	3643	2959	2404	2128	1952	1826	1729	1651	1586	1531	1483	1404	1313	1243	1205	1127	1067	1018
	100000	2768	2248	1826	1617	1483	1387	1313	1254	1205	1163	1127	1067	998	945	915	856	810	774
3	8000	*	*	*	4243	3893	3640	3447	3291	3162	3052	2957	2800	2618	2479	2402	2246	2127	2031
	20000	*	4482	3640	3224	2957	2766	2618	2500	2402	2318	2246	2127	1989	1883	1825	1706	1616	1543
	40000	4482	3640	2957	2618	2402	2246	2127	2031	1951	1883	1825	1727	1616	1530	1482	1386	1312	1253
	100000	3405	2766	2246	1989	1825	1706	1616	1543	1482	1431	1386	1312	1227	1162	1126	1053	997	952
4	8000	*	*	*	4471	4101	3836	3631	3467	3331	3215	3115	2950	2759	2612	2531	2367	2241	2139
	20000	*	4722	3836	3396	3115	2914	2759	2634	2531	2443	2367	2241	2096	1984	1922	1798	1702	1625
	40000	4722	3836	3115	2759	2531	2367	2241	2139	2055	1984	1922	1820	1702	1612	1561	1460	1383	1320
	100000	3587	2914	2367	2096	1922	1798	1702	1625	1561	1507	1460	1383	1293	1224	1186	1109	1050	1003
5	8000	*	*	*	6263	5745	5373	5087	4857	4666	4504	4364	4132	3864	3659	3545	3315	3139	2997
	20000	*	6615	5373	4757	4364	4081	3864	3690	3545	3422	3315	3139	2935	2779	2693	2518	2384	2277
	40000	6615	5373	4364	3864	3545	3315	3139	2997	2879	2779	2693	2549	2384	2257	2187	2046	1937	1849
	100000	5025	4081	3315	2935	2693	2518	2384	2277	2187	2111	2046	1937	1811	1715	1662	1554	1471	1405
6	8000	*	*	*	6504	5966	5580	5283	5044	4846	4678	4532	4291	4013	3800	3681	3443	3260	3112
	20000	*	6870	5580	4941	4532	4239	4013	3832	3681	3554	3443	3260	3049	2886	2797	2615	2476	2364
	40000	6870	5580	4532	4013	3681	3443	3260	3112	2990	2886	2797	2648	2476	2344	2272	2124	2011	1920
	100000	5219	4239	3443	3049	2797	2615	2476	2364	2272	2193	2124	2011	1881	1781	1726	1614	1528	1459
7	8000	*	*	*	8189	7512	7026	6652	6351	6102	5890	5707	5403	5053	4784	4635	4335	4104	3919
	20000	*	8649	7026	6221	5707	5337	5053	4825	4635	4474	4335	4104	3839	3634	3521	3293	3118	2977
	40000	8649	7026	5707	5053	4635	4335	4104	3919	3765	3634	3521	3334	3118	2952	2860	2675	2532	2418
	100000	6571	5337	4335	3839	3521	3293	3118	2977	2860	2761	2675	2532	2368	2242	2173	2032	1924	1837
8	8000	*	*	*	9735	8930	8352	7907	7550	7254	7002	6784	6423	6007	5687	5510	5153	4879	
	20000	*	10283	8352	7395	6784	6345	6007	5736	5510	5319	5153	4879	4563	4320	4186	3915	3707	
	40000	10283	8352	6784	6007	5510	5153	4879	4659	4476	4320	4186	3963	3707	3509	3400	3180	3011	
	100000	7811	6345	5153	4563	4186	3915	3707	3539	3400	3282	3180	3011	2816	2666	2583	2416	2287	
9	8000	*	*	*	13003	11927	11155	10561	10084	9688	9352	9061	8578	8023	7596	7360	6883		
	20000	*	13734	11155	9877	9061	8474	8023	7660	7360	7104	6883	6517	6095	5770	5591	5229		
	40000	13734	11155	9061	8023	7360	6883	6517	6222	5978	5770	5591	5293	4950	4687	4541	4247		
	100000	10433	8474	6883	6095	5591	5229	4950	4727	4541	4383	4247	4021	3761	3560	3450	3226		
10	8000	*	*	*	18987	17417	16289	15422	14725	14147	13656	13231	12526	11715	11092	10747	10051		
	20000	*	20054	16289	14423	13231	12374	11715	11186	10747	10374	10051	9516	8900	8426	8164	7635		
	40000	20054	16289	13231	11715	10747	10051	9516	9086	8729	8426	8164	7729	7229	6844	6631	6202		
	100000	15234	12374	10051	8900	8164	7635	7229	6902	6631	6401	6202	5872	5491	5199	5037	4711		
11	8000	*	*	*	29487	27049	25298	23951	22869	21971	21208	20548	19454	18195	17226	16690			
	20000	*	31145	25298	22400	20548	19217	18195	17372	16690	16111	15609	14779	13822	13086	12679			
	40000	31145	25298	20548	18195	16690	15609	14779	14111	13557	13086	12679	12004	11227	10629	10298			
	100000	23660	19217	15609	13822	12679	11858	11227	10719	10298	9941	9632	9119	8528	8074	7823			
12	8000	*	*	*	33661	30877	28878	27341	26105	25080	24209	23456	22208	20770	19664				
	20000	*	35553	28878	25570	23456	21937	20770	19831	19052	18391	17819	16870	15778	14938				
	40000	35553	28878	23456	20770	19052	17819	16870	16108	15475	14938	14473	13703	12816	12133				
	100000	27008	21937	17819	15778	14473	13536	12816	12236	11756	11348	10995	10409	9735	9217				
13	8000	*	*	*	43026	39469	36913	34948	33369	32058	30945	29983	28387	26549					
	20000	*	45445	36913	32685	29983	28041	26549	25349	24353	23508	22777	21564	20168					
	40000	45445	36913	29983	26549	24353	22777	21564	20590	19781	19094	18500	17516	16381					
	100000	34523	28041	22777	20168	18500	17302	16381	15641	15027	14505	14054	13306	12444					
14	8000	*	*	*	51700	47425	44355	41994	40096	38521	37184	36027							
	20000	*	54607	44355	39275	36027	33694	31901	30459	29263	28247	27368							
	40000	54607	44355	36027	31901	29263	27368	25912	24741	23769	22944	22230							
	100000	41483	33694	27368	24234	22230	20791	19684	18794	18056	17429	16887							
15	8000	*	*	*	55885	51264	47944	45392	43341	41639	40194	38943							
	20000	*	59027	47944	42453	38943	36421	34483	32924	31632	30533	29583							
	40000	59027	47944	38943	34483	31632	29583	28009	26743	25693	24801	24029							
	100000	44840	36421	29583	26195	24029	22473	21277	20315	19518	18840	18254							
16	8000	*	*	*	69766	63998	59854	56668	54107	51982									
	20000	*	73689	59854	52998	48616	45468	43048	41103	39489									
	40000	73689	59854	48616	43048	39489	36932	34966	33386	32075									
	100000	55978	45468	36932	32702	29998	28055	26562	25362	24366									

*Load exceeds 25% of the C rating, consult Rexnord Bearing Division.

Shaded areas may require additional axial clearance and/or high speed temperature lubricant due to higher operating temperatures.

Auxiliary Cap Seals for 2000, 3000, 5000, 9000 Series

Kit Nomenclature

A S 9 - 2 1 5

Symbol	Description
A	open cap
B	closed cap
S	floating type
*	leave blank for fixed type
4-16	bearing size code from dimension page
215	2 15/16" last two digits in 16th of an inch
*	not required for closed style caps

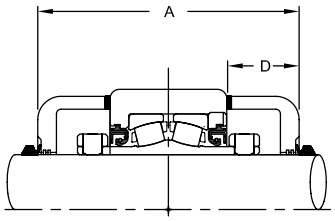

"A" Prefix
(Two Open Caps)
Example: AMA5207

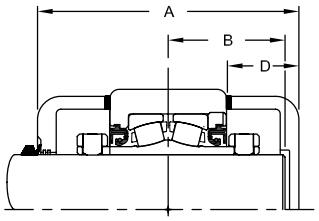

"B" Prefix
(1 Open 1 Closed Caps)
Example: BMA5207

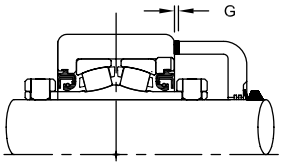

Gasket
Thickness

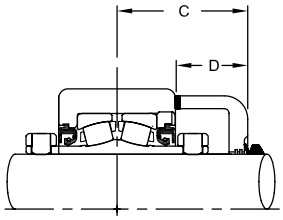

"A" SUFFIX
(One Open Cap)
Example: MA5207A

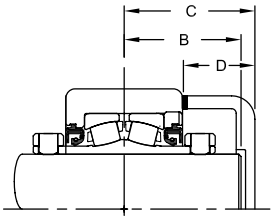

"B" SUFFIX
(One Closed Cap)
Example: MA5207B

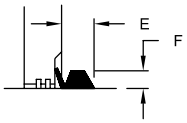

V-Ring Seal Detail

Cast Iron Auxiliary Cap

Size Code	Fixed Bearings Only				Floating (Expansion) Bearings Only				V-Ring Seal		Gasket
	A	B	C	D*	A	B	C	D*	E	F	G
4	5 5/16	2 5/16	2 11/16	1 9/16	5 1/2	2 3/8	2 3/4	1 17/32	5/16	3/16	3/16
5	5 1/2	2 7/16	2 3/4	1 17/32	5 3/4	2 1/2	2 7/8	1 15/32	3/8	3/16	
6	5 9/16	2 7/16	2 13/16	1 9/16	5 3/4	2 1/2	2 7/8	1 17/32			
7	5 3/4	2 1/2	2 7/8	1 19/32	6 1/16	2 5/8	31/16	1 21/32			
8	6 1/16	2 3/4	3 1/16	1 23/32	6 5/16	2 3/4	3 3/16	1 23/32			
9	7	3 1/8	3 1/2	1 15/16	6 15/16	3 1/16	3 1/2	1 25/32	7/16	1/4	
10	6 15/16	3 1/16	3 1/2	1 13/16	7 3/8	3 5/8	3 11/16	1 29/32			
11	8 5/16	3 5/8	4 3/16	2 5/32	8 9/16	3 3/4	4 5/16	2 5/32			
12	8 1/2	3 3/4	4 1/4	2 3/16	9 3/8	4 5/16	4 11/16	2 1/2	9/16	5/16	
13	10 1/8	4 1/2	5 1/16	2 9/32	10 9/16	4 3/4	5 5/16	2 9/32			
14	10 1/8	4 1/2	5 1/16	2 9/32	11 1/16	5	5 9/16	2 5/8			
15	11 1/16	4 15/16	5 9/16	2 5/8	11 1/2	4 15/16	5 3/4	2 3/4			
16	11 3/16	5	5 5/8	2 1/2	11 5/8	5 1/4	5 13/16	2 5/8	5/8	3/8	

Adapter Auxiliary End Cap Dimensions for 6000 Series Size Codes 6-13

Kit Nomenclature

A S 9 6 2 1 5

Symbol	Description
A	open cap
B	closed cap
S	floating type
*	leave blank for fixed type
6-13	bearing size code from dimension page
6	type "A" open caps
6000	type "B" closed caps
215	2-15/16" last two digits in 16th of an inch
*	not required for closed style caps

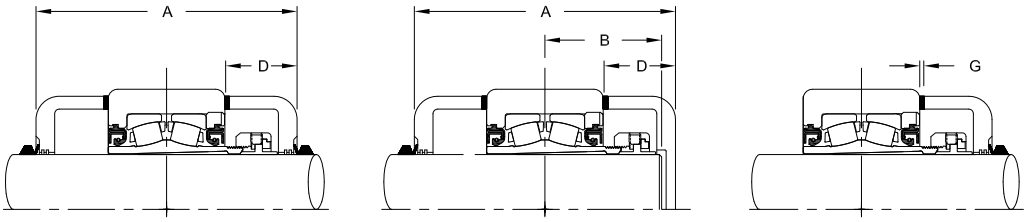

"A" Prefix
(Two Open Caps)
Example: AMA6215

"B" Prefix
(1 Open 1 Closed Caps)
Example: BMA6215

Gasket
Thickness

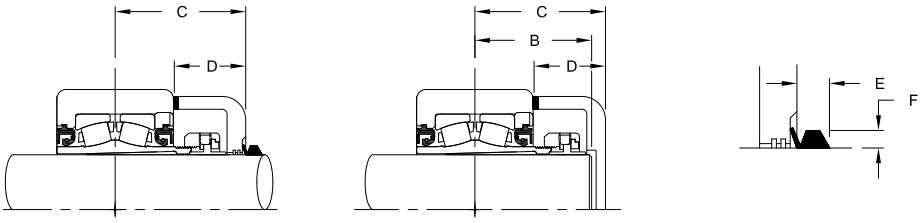

"A" SUFFIX
(One Open Cap)
Example: MA6215A

"B" SUFFIX
(One Closed Cap)
Example: MA6215B

V-Ring Seal Detail

6000 Series Adapter Mount Auxiliary Cap Dimensions

Cast Iron Auxiliary Caps																
Bearing Number	Size Code	Fixed Bearings Only				Floating (Expansion) ZAFS Bearings Only				Floating (Expansion) ZPS, ZFS Bearings Only				V-Ring Seal		Gasket
		A	B	C	D	A	B	C	D	A	B	C	D	E	F	G
6115	6	5 7/8	2 9/16	2 15/16	1 23/32	6 1/4	2 11/16	3 1/8	1 29/32	6 1/2	2 13/16	3 1/4	1 29/32	3/8	3/16	3/16
6203	7	6 1/16	2 5/8	3 1/32	1 3/4	6 7/16	2 25/32	3 7/32	1 15/16	6 5/8	2 7/8	3 5/16	1 15/16			
6206	8	6 11/16	3 1/32	3 11/32	2 1/32	7 3/16	3 5/32	3 19/32	2 9/32	7 7/16	3 9/32	3 23/32	2 9/32			
6207																
6211	9	7 1/4	3 1/16	3 5/8	2 1/16	7 3/4	3 7/16	3 7/8	2 5/16	8	3 9/16	4	2 5/16	7/16	1/4	
6212																
6215																
6303	10	7 15/16	3 17/32	3 31/32	2 1/4	8 7/16	3 25/32	4 7/32	2 1/2	8 11/16	3 29/32	4 11/32	2 1/2			
6307																
6311	11	9	3 15/16	4 1/2	2 7/16	9 1/2	4 3/16	4 3/4	2 11/16	9 3/4	4 5/16	4 7/8	2 11/16			
6315																
6403Y	12	9 7/16	4 5/32	4 23/32	2 19/32	10 3/16	4 21/32	5 3/32	2 31/32	10 7/16	4 31/32	5 7/32	2 31/32	9/16	5/16	
6407Y																
6415	13	11 5/8	5 1/4	5 13/16	3 1/32	12 3/8	5 5/8	6 3/16	3 13/32	12 13/16	5 27/32	6 13/32	3 13/32			

Adapter Auxiliary End Cap Dimensions for 6000 Series Size Codes 14-16

Kit Nomenclature

A S LN 14 6 507

Symbol	Description
A	open cap
B	closed cap
S	floating type or ZLF, ZLFS
*	leave blank for fixed type
LN	for locknut side
*	leave blank for non-locknut side
14-16	bearing size code from dimension page
6	type "A" open caps
6000	type "B" closed caps
507	5-7/16" last two digits in 16th of an inch
*	not required for closed style caps

LN kits provided with extended cap to provide clearance over adapter assembly.

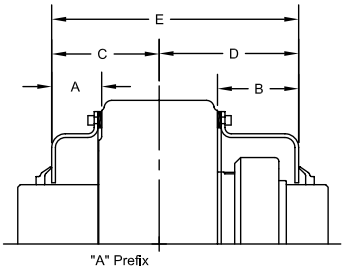

"A" Prefix
(2 Open Caps)
Example: AZAF6515F

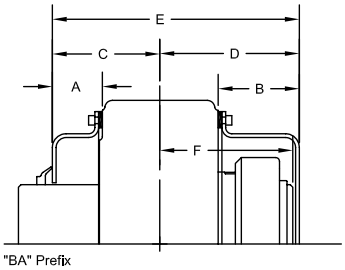

"BA" Prefix
(1 Closed Cap Locknut Side 1 Open Cap Housing side)
Example: BAZAF6515F

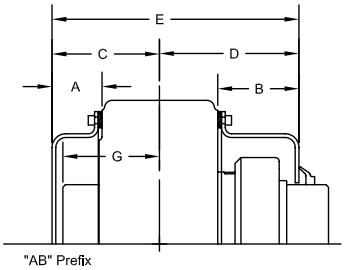

"AB" Prefix
(1 Open Cap Locknut Side 1 Closed Cap Housing side)
Example: ABZAF6515F

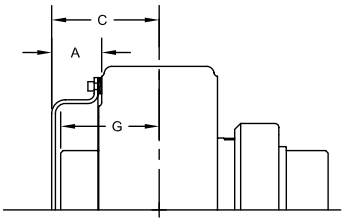

"B66" Suffix
(1 Closed Cap Locknut Side "Opposite Locknut")
Example: ZAF6515FB66

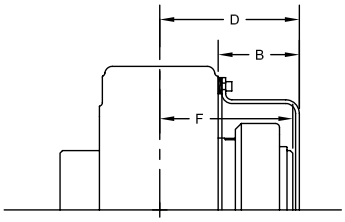

"B" Suffix
(1 Closed Cap Locknut Side)
Example: ZAF6515FB

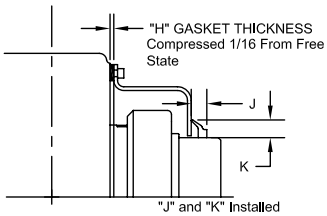

"J" and "K" Installed
Dimensions

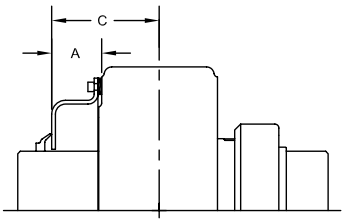

"A66" Suffix
(1 Open Cap Housing side "Opposite Locknut")
Example: ZAF6515FA66

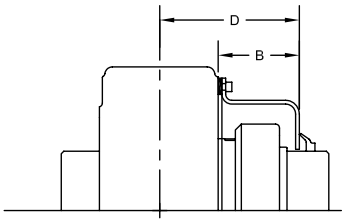

"A" Suffix
(1 Open Cap Locknut Side)
Example: ZAF6515FA

6000 Series Adapter Mount Auxiliary Cap Dimensions (Size codes 14-16)

Steel Auxiliary Caps

Bearing Number	Size Code	Fixed Bearings Only (No ZLF)								Floating (Expansion) ZPS, ZAFS Bearings Only								V-Ring Seal	
		A	B	C	D	E	F	G	*H	A	B	C	D	E	F	G	**H	J	K
6507	14	2 5/32	3 11/16	4 29/32	6 1/2	11 13/32	6 1/8	4 3/16	3/16	2 11/16	3 31/32	5 19/32	6 7/8	12 15/32	4 1/2	6 1/8	3/8	5/8	3/4
6515	15	2 1/2	4 1/16	5 3/8	6 63/64	12 23/64	6 5/8	4 11/16	3/16	2 9/16	4 3/8	5 9/16	7 3/8	12 15/16	6 5/8	4 3/8	3/8	45/64	7/8
6607	16	2 3/8	4 5/16	5 7/16	7 13/32	12 27/32	7	4 3/4	3/16	2 11/16	4 5/8	5 7/8	7 13/16	13 11/16	7	4 3/4	3/8	45/64	7/8
6615																		45/64	7/8

Bearing Number	Size Code	ZLF-ZLFS Split Housed Bearings Only								V-Ring Seal	
		A	B	C	D	E	F	G	*H	J	K
6507	14	2 1/2	3 25/32	5 7/8	7 5/32	13 1/32	6	5 3/16	3/16	5/8	3/4
6515	15	2 3/8	4 3/16	5 7/8	7 11/16	13 9/16	6 1/2	5 3/16	3/16	45/64	7/8
6607	16	2 1/2	4 7/16	6 3/16	8 1/8	14 5/16	6 7/8	5 1/2	3/16	45/64	7/8
6615										45/64	7/8

*H-compressed thickness. Free state is 1/4"

**H-compressed thickness. Free state 1/4. 2 gaskets required

Auxiliary Cap Kit

Auxiliary Cap Kit Part Number by Housing Style ‡

Size Code	Series	Aux Cap Style	HousingType												
			ZA	ZAS	ZEP	ZEPS	ZP	ZPS	ZAF	ZAFS	ZLF	ZLFS	ZB ◊	ZBS	ZF ◊
2	2000	Open	N/A	N/A	N/A	N/A	N/A	N/A	N/A	N/A	N/A	N/A	N/A	N/A	N/A
		Closed	N/A	N/A	N/A	N/A	N/A	N/A	N/A	N/A	N/A	N/A	N/A	N/A	N/A
3	2000	Open	N/A	N/A	N/A	N/A	N/A	N/A	N/A	N/A	N/A	N/A	N/A	N/A	N/A
		Closed	N/A	N/A	N/A	N/A	N/A	N/A	N/A	N/A	N/A	N/A	N/A	N/A	N/A
4	2000	Open	A4***	N/A	A4***	N/A	A4***	AS4***	N/A	N/A	N/A	N/A	N/A	N/A	A4***
		Closed	B4	N/A	B4	N/A	B4	BS4	N/A	N/A	N/A	N/A	N/A	N/A	B4
	3000	Open	A4***	N/A	A4***	N/A	A4***	AS4***	N/A	N/A	N/A	N/A	N/A	N/A	A4***
		Closed	B4	N/A	B4	N/A	B4	BS4	N/A	N/A	N/A	N/A	N/A	N/A	B4
	5000	Open	A4***	N/A	A4***	N/A	A4***	AS4***	N/A	N/A	N/A	N/A	N/A	N/A	A4***
		Closed	B4	N/A	B4	N/A	B4	BS4	N/A	N/A	N/A	N/A	N/A	N/A	B4
	6000	Open	N/A	N/A	N/A	N/A	N/A	N/A	N/A	N/A	N/A	N/A	N/A	N/A	N/A
		Closed	N/A	N/A	N/A	N/A	N/A	N/A	N/A	N/A	N/A	N/A	N/A	N/A	N/A
5	2000	Open	A5***	N/A	A5***	N/A	A5***	AS5***	N/A	N/A	N/A	N/A	N/A	N/A	A5***
		Closed	B5	N/A	B5	N/A	B5	BS5	N/A	N/A	N/A	N/A	N/A	N/A	B5
	3000	Open	A5***	N/A	A5***	N/A	A5***	AS5***	N/A	N/A	N/A	N/A	N/A	N/A	A5***
		Closed	B5	N/A	B5	N/A	B5	BS5	N/A	N/A	N/A	N/A	N/A	N/A	B5
	5000	Open	A5***	N/A	A5***	N/A	A5***	AS5***	N/A	N/A	N/A	N/A	N/A	N/A	A5***
		Closed	B5	N/A	B5	N/A	B5	BS5	N/A	N/A	N/A	N/A	N/A	N/A	B5
	6000	Open	N/A	N/A	N/A	N/A	N/A	N/A	N/A	N/A	N/A	N/A	N/A	N/A	N/A
		Closed	N/A	N/A	N/A	N/A	N/A	N/A	N/A	N/A	N/A	N/A	N/A	N/A	N/A
6	2000	Open	A6***	N/A	A6***	N/A	A6***	AS6***	A6***	AS6***	N/A	N/A	N/A	N/A	A6***
		Closed	B6	N/A	B6	N/A	B6	BS6	B6	BS6	N/A	N/A	N/A	N/A	B6
	3000	Open	A6***	N/A	A6***	N/A	A6***	AS6***	A6***	AS6***	N/A	N/A	N/A	N/A	A6***
		Closed	B6	N/A	B6	N/A	B6	BS6	B6	BS6	N/A	N/A	N/A	N/A	B6
	5000	Open	A6***	N/A	A6***	N/A	A6***	AS6***	A6***	AS6***	N/A	N/A	N/A	N/A	A6***
		Closed	B6	N/A	B6	N/A	B6	BS6	B6	BS6	N/A	N/A	N/A	N/A	B6
	6000	Open	A66***	N/A	A66***	N/A	A66***	AS66***	A66***	AS66***	N/A	N/A	N/A	N/A	A66***
		Closed	B66000	N/A	B66000	N/A	B66000	BS66000	B66000	BS66000	N/A	N/A	N/A	N/A	B66000
7	2000	Open	A7***	N/A	A7***	N/A	A7***	AS7***	A7***	AS7***	N/A	N/A	A7***	N/A	A7***
		Closed	B7	N/A	B7	N/A	B7	BS7	B7	BS7	N/A	N/A	B7	N/A	B7
	3000	Open	A7***	N/A	A7***	N/A	A7***	AS7***	A7***	AS7***	N/A	N/A	A7***	N/A	A7***
		Closed	B7	N/A	B7	N/A	B7	BS7	B7	BS7	N/A	N/A	B7	N/A	B7
	5000	Open	A7***	N/A	A7***	N/A	A7***	AS7***	A7***	AS7***	N/A	N/A	A7***	N/A	A7***
		Closed	B7	N/A	B7	N/A	B7	BS7	B7	BS7	N/A	N/A	B7	N/A	B7
	6000	Open	A76***	N/A	A76***	N/A	A76***	AS76***	A76***	AS76***	N/A	N/A	A76***	N/A	A76***
		Closed	B76000	N/A	B76000	N/A	B76000	BS76000	B76000	BS76000	N/A	N/A	B76000	N/A	B76000
	9000	Open	A7***	N/A	A7***	N/A	A7***	AS7***	A7***	AS7***	N/A	N/A	A7***	N/A	A7***
		Closed	B7	N/A	B7	N/A	B7	BS7	B7	BS7	N/A	N/A	B7	N/A	B7
8	2000	Open	A8***	N/A	A8***	N/A	A8***	AS8***	A8***	AS8***	N/A	N/A	A8***	N/A	A8***
		Closed	B8	N/A	B8	N/A	B8	BS8	B8	BS8	N/A	N/A	B8	N/A	B8
	3000	Open	A8***	N/A	A8***	N/A	A8***	AS8***	A8***	AS8***	N/A	N/A	A8***	N/A	A8***
		Closed	B8	N/A	B8	N/A	B8	BS8	B8	BS8	N/A	N/A	B8	N/A	B8
	5000	Open	A8***	N/A	A8***	N/A	A8***	AS8***	A8***	AS8***	N/A	N/A	A8***	N/A	A8***
		Closed	B8	N/A	B8	N/A	B8	BS8	B8	BS8	N/A	N/A	B8	N/A	B8
	6000	Open	A86***	N/A	A86***	N/A	A86***	AS86***	A86***	AS86***	N/A	N/A	A86***	N/A	A86***
		Closed	B86000	N/A	B86000	N/A	B86000	BS86000	B86000	BS86000	N/A	N/A	B86000	N/A	B86000
	9000	Open	A8***	N/A	A8***	N/A	A8***	AS8***	A8***	AS8***	N/A	N/A	A8***	N/A	A8***
		Closed	B8	N/A	B8	N/A	B8	BS8	B8	BS8	N/A	N/A	B8	N/A	B8
9	2000	Open	A9***	N/A	A9***	N/A	A9***	AS9***	A9***	AS9***	N/A	N/A	A9***	N/A	A9***
		Closed	B9	N/A	B9	N/A	B9	BS9	B9	BS9	N/A	N/A	B9	N/A	B9
	3000	Open	A9***	N/A	A9***	N/A	A9***	AS9***	A9***	AS9***	N/A	N/A	A9***	N/A	A9***
		Closed	B9	N/A	B9	N/A	B9	BS9	B9	BS9	N/A	N/A	B9	N/A	B9
	5000	Open	A9***	N/A	A9***	N/A	A9***	AS9***	A9***	AS9***	N/A	N/A	A9***	N/A	A9***
		Closed	B9	N/A	B9	N/A	B9	BS9	B9	BS9	N/A	N/A	B9	N/A	B9
	6000	Open	A96***	N/A	A96***	N/A	A96***	AS96***	A96***	AS96***	N/A	N/A	A96***	N/A	A96***
		Closed	B96000	N/A	B96000	N/A	B96000	BS96000	B96000	BS96000	N/A	N/A	B96000	N/A	B96000
	9000	Open	A9***	N/A	A9***	N/A	A9***	AS9***	A9***	AS9***	N/A	N/A	A9***	N/A	A9***
		Closed	B9	N/A	B9	N/A	B9	BS9	B9	BS9	N/A	N/A	B9	N/A	B9
10	2000	Open	A10***	N/A	A10***	N/A	A10***	AS10***	A10***	AS10***	N/A	N/A	A10***	N/A	A10***
		Closed	B10	N/A	B10	N/A	B10	BS10	B10	BS10	N/A	N/A	B10	N/A	B10
	3000	Open	A10***	N/A	A10***	N/A	A10***	AS10***	A10***	AS10***	N/A	N/A	A10***	N/A	A10***
		Closed	B10	N/A	B10	N/A	B10	BS10	B10	BS10	N/A	N/A	B10	N/A	B10
	5000	Open	A10***	N/A	A10***	N/A	A10***	AS10***	A10***	AS10***	N/A	N/A	A10***	N/A	A10***
		Closed	B10	N/A	B10	N/A	B10	BS10	B10	BS10	N/A	N/A	B10	N/A	B10
	6000	Open	A106***	N/A	A106***	N/A	A106***	AS106***	A106***	AS106***	N/A	N/A	A106***	N/A	A106***
		Closed	B106000	N/A	B106000	N/A	B106000	BS106000	B106000	BS106000	N/A	N/A	B106000	N/A	B106000
	9000	Open	A10***	N/A	A10***	N/A	A10***	AS10***	A10***	AS10***	N/A	N/A	A10***	N/A	A10***
		Closed	B10	N/A	B10	N/A	B10	BS10	B10	BS10	N/A	N/A	B10	N/A	B10
11	2000	Open	A11***	N/A	A11***	N/A	A11***	AS11***	A11***	AS11***	N/A	N/A	A11***	N/A	A11***
		Closed	B11	N/A	B11	N/A	B11	BS11	B11	BS11	N/A	N/A	B11	N/A	B11
	3000	Open	A11***	N/A	A11***	N/A	A11***	AS11***	A11***	AS11***	N/A	N/A	A11***	N/A	A11***
		Closed	B11	N/A	B11	N/A	B11	BS11	B11	BS11	N/A	N/A	B11	N/A	B11
	5000	Open	A11***	N/A	A11***	N/A	A11***	AS11***	A11***	AS11***	N/A	N/A	A11***	N/A	A11***
		Closed	B11	N/A	B11	N/A	B11	BS11	B11	BS11	N/A	N/A	B11	N/A	B11
	6000	Open	A116***	N/A	A116***	N/A	A116***	AS116***	A116***	AS116***	N/A	N/A	A116***	N/A	A116***
		Closed	B116000	N/A	B116000	N/A	B116000	BS116000	B116000	BS116000	N/A	N/A	B116000	N/A	B116000
	9000	Open	A11***	N/A	A11***	N/A	A11***	AS11***	A11***	AS11***	N/A	N/A	A11***	N/A	A11***
		Closed	B11	N/A	B11	N/A	B11	BS11	B11	BS11	N/A	N/A	B11	N/A	B11

Auxiliary Cap Kit Part Number by Housing Style ‡ (Continued)

Size Code	Series	Aux Cap Style	HousingType												
			ZA	ZAS	ZEP	ZEPS	ZP	ZPS	ZAF	ZAFS	ZLF	ZLFS	ZB ◊	ZBS	ZF ◊
12	2000	Open	N/A	N/A	N/A	N/A	N/A	N/A	N/A	N/A	N/A	N/A	N/A	N/A	N/A
		Closed	N/A	N/A	N/A	N/A	N/A	N/A	N/A	N/A	N/A	N/A	N/A	N/A	N/A
	3000	Open	N/A	N/A	N/A	N/A	N/A	N/A	N/A	N/A	N/A	N/A	N/A	N/A	N/A
		Closed	N/A	N/A	N/A	N/A	N/A	N/A	N/A	N/A	N/A	N/A	N/A	N/A	N/A
	5000	Open	N/A	N/A	N/A	N/A	A12***	AS12***	A12***	AS12***	N/A	N/A	N/A	N/A	A12***
		Closed	N/A	N/A	N/A	N/A	B12	BS12	B12	BS12	N/A	N/A	N/A	N/A	B12
	6000	Open	N/A	N/A	A126***	N/A	A126***	AS126***	A126***	AS126***	N/A	N/A	N/A	N/A	A126***
		Closed	N/A	N/A	B126000	N/A	B126000	BS126000	B126000	BS126000	N/A	N/A	N/A	N/A	B126000
	9000	Open	N/A	N/A	A12***	N/A	A12***	AS12***	A12***	AS12***	N/A	N/A	N/A	N/A	A12***
		Closed	N/A	N/A	B12	N/A	B12	BS12	B12	BS12	N/A	N/A	N/A	N/A	B12
13	2000	Open	N/A	N/A	N/A	N/A	N/A	N/A	N/A	N/A	N/A	N/A	N/A	N/A	N/A
		Closed	N/A	N/A	N/A	N/A	N/A	N/A	N/A	N/A	N/A	N/A	N/A	N/A	N/A
	3000	Open	N/A	N/A	N/A	N/A	N/A	N/A	N/A	N/A	N/A	N/A	N/A	N/A	N/A
		Closed	N/A	N/A	N/A	N/A	N/A	N/A	N/A	N/A	N/A	N/A	N/A	N/A	N/A
	5000	Open	N/A	N/A	N/A	N/A	A13***	AS13***	A13***	AS13***	N/A	N/A	N/A	N/A	A13***
		Closed	N/A	N/A	N/A	N/A	B13	BS13	B13	BS13	N/A	N/A	N/A	N/A	B13
	6000	Open	N/A	N/A	A136***	N/A	A136***	AS136***	A136***	AS136***	N/A	N/A	N/A	N/A	A136***
		Closed	N/A	N/A	B136000	N/A	B136000	BS136000	B136000	BS136000	N/A	N/A	N/A	N/A	B136000
	9000	Open	N/A	N/A	A13***	N/A	A13***	AS13***	A13***	AS13***	N/A	N/A	N/A	N/A	A13***
		Closed	N/A	N/A	B13	N/A	B13	BS13	B13	BS13	N/A	N/A	N/A	N/A	B13
14	2000	Open	N/A	N/A	N/A	N/A	N/A	N/A	N/A	N/A	N/A	N/A	N/A	N/A	N/A
		Closed	N/A	N/A	N/A	N/A	N/A	N/A	N/A	N/A	N/A	N/A	N/A	N/A	N/A
	3000	Open	N/A	N/A	N/A	N/A	N/A	N/A	N/A	N/A	N/A	N/A	N/A	N/A	N/A
		Closed	N/A	N/A	N/A	N/A	N/A	N/A	N/A	N/A	N/A	N/A	N/A	N/A	N/A
	5000	Open	N/A	N/A	N/A	N/A	A14***	AS14***	A14***	AS14***	N/A	N/A	N/A	N/A	N/A
		Closed	N/A	N/A	N/A	N/A	B14	BS14	B14	BS14	N/A	N/A	N/A	N/A	N/A
	6000	Open Locknut Side	N/A	N/A	N/A	N/A	ALN146***	ALN146***	ALN146***	ALN146***	ASLN146***	ASLN146***	N/A	N/A	N/A
		Open Non Locknut Side	N/A	N/A	N/A	N/A	A146***	A146***	A146***	A146***	AS146***	AS146***	N/A	N/A	N/A
		Closed Locknut Side	N/A	N/A	N/A	N/A	BLN146000	BLN146000	BLN146000	BLN146000	BSLN146000	BSLN146000	N/A	N/A	N/A
		Closed Non Locknut Side	N/A	N/A	N/A	N/A	B146000	BS146000	B146000	BS146000	BS146000	BS146000	N/A	N/A	N/A
	9000	Open	N/A	N/A	N/A	N/A	A14***	AS14***	A14***	AS14***	N/A	N/A	N/A	N/A	N/A
		Closed	N/A	N/A	N/A	N/A	B14	BS14	B14	BS14	N/A	N/A	N/A	N/A	N/A
15	2000	Open	N/A	N/A	N/A	N/A	N/A	N/A	N/A	N/A	N/A	N/A	N/A	N/A	N/A
		Closed	N/A	N/A	N/A	N/A	N/A	N/A	N/A	N/A	N/A	N/A	N/A	N/A	N/A
	3000	Open	N/A	N/A	N/A	N/A	N/A	N/A	N/A	N/A	N/A	N/A	N/A	N/A	N/A
		Closed	N/A	N/A	N/A	N/A	N/A	N/A	N/A	N/A	N/A	N/A	N/A	N/A	N/A
	5000	Open	N/A	N/A	N/A	N/A	A15***	AS15***	A15***	AS15***	N/A	N/A	N/A	N/A	N/A
		Closed	N/A	N/A	N/A	N/A	B15	BS15	B15	BS15	N/A	N/A	N/A	N/A	N/A
	6000	Open Locknut Side	N/A	N/A	N/A	N/A	ALN156***	ALN156***	ALN156***	ALN156***	ASLN156***	ASLN156***	N/A	N/A	N/A
		Open Non Locknut Side	N/A	N/A	N/A	N/A	A156***	A156***	A156***	A156***	AS156***	AS156***	N/A	N/A	N/A
		Closed Locknut Side	N/A	N/A	N/A	N/A	BLN156000	BLN156000	BLN156000	BLN156000	BSLN156000	BSLN156000	N/A	N/A	N/A
		Closed Non Locknut Side	N/A	N/A	N/A	N/A	B156000	BS156000	B156000	BS156000	BS156000	BS156000	N/A	N/A	N/A
	9000	Open	N/A	N/A	N/A	N/A	A15***	AS15***	A15***	AS15***	N/A	N/A	N/A	N/A	N/A
		Closed	N/A	N/A	N/A	N/A	B15	BS15	B15	BS15	N/A	N/A	N/A	N/A	N/A
16	2000	Open	N/A	N/A	N/A	N/A	N/A	N/A	N/A	N/A	N/A	N/A	N/A	N/A	N/A
		Closed	N/A	N/A	N/A	N/A	N/A	N/A	N/A	N/A	N/A	N/A	N/A	N/A	N/A
	3000	Open	N/A	N/A	N/A	N/A	N/A	N/A	N/A	N/A	N/A	N/A	N/A	N/A	N/A
		Closed	N/A	N/A	N/A	N/A	N/A	N/A	N/A	N/A	N/A	N/A	N/A	N/A	N/A
	5000	Open	N/A	N/A	N/A	N/A	A16***	AS16***	A16***	AS16***	N/A	N/A	N/A	N/A	N/A
		Closed	N/A	N/A	N/A	N/A	B16	BS16	B16	BS16	N/A	N/A	N/A	N/A	N/A
	6000	Open Locknut Side	N/A	N/A	N/A	N/A	ALN166***	ALN166***	ALN166***	ALN166***	ASLN166***	ASLN166***	N/A	N/A	N/A
		Open Non Locknut Side	N/A	N/A	N/A	N/A	A166***	A166***	A166***	A166***	AS166***	AS166***	N/A	N/A	N/A
		Closed Locknut Side	N/A	N/A	N/A	N/A	BLN166000	BLN166000	BLN166000	BLN166000	BSLN166000	BSLN166000	N/A	N/A	N/A
		Closed Non Locknut Side	N/A	N/A	N/A	N/A	B166000	BS166000	B166000	BS166000	BS166000	BS166000	N/A	N/A	N/A
	9000	Open	N/A	N/A	N/A	N/A	A16***	AS16***	A16***	AS16***	N/A	N/A	N/A	N/A	N/A
		Closed	N/A	N/A	N/A	N/A	B16	BS16	B16	BS16	N/A	N/A	N/A	N/A	N/A

‡ Housings are not drilled to accept auxiliary caps as standard.
*** Indicates shaft size in inches, i.e. the open cap for a ZA2107 would be A4107
◊ See specific product page for applicability.

Auxiliary Cap Kit Part Number by Housing Style ‡ (Continued)

Size Code	Series	Aux Cap Style	HousingType												
			ZFS ◊	ZEF	ZBR	ZCS	ZMC	ZT	ZN	ZHT	ZST	ZAT ◊	ZFT	ZGT	ZNT
2	2000	Open	N/A	N/A	N/A	N/A	N/A	N/A	N/A	N/A	N/A	N/A	N/A	N/A	N/A
		Closed	N/A	N/A	N/A	N/A	N/A	N/A	N/A	N/A	N/A	N/A	N/A	N/A	N/A
3	2000	Open	N/A	N/A	N/A	N/A	N/A	N/A	N/A	N/A	N/A	N/A	N/A	N/A	N/A
		Closed	N/A	N/A	N/A	N/A	N/A	N/A	N/A	N/A	N/A	N/A	N/A	N/A	N/A
4	2000	Open	AS4***	A4***	A4***	N/A	N/A	A4***	N/A	N/A	N/A	A4***	A4***	N/A	N/A
		Closed	BS4	B4	B4	N/A	N/A	B4	N/A	N/A	N/A	B4	B4	N/A	N/A
	3000	Open	AS4***	A4***	A4***	N/A	N/A	A4***	N/A	N/A	N/A	A4***	A4***	N/A	N/A
		Closed	BS4	B4	B4	N/A	N/A	B4	N/A	N/A	N/A	B4	B4	N/A	N/A
	5000	Open	AS4***	A4***	A4***	N/A	N/A	A4***	N/A	N/A	N/A	A4***	A4***	N/A	N/A
		Closed	BS4	B4	B4	N/A	N/A	B4	N/A	N/A	N/A	B4	B4	N/A	N/A
	6000	Open	N/A	N/A	N/A	N/A	N/A	N/A	N/A	N/A	N/A	N/A	N/A	N/A	N/A
		Closed	N/A	N/A	N/A	N/A	N/A	N/A	N/A	N/A	N/A	N/A	N/A	N/A	N/A
5	2000	Open	AS5***	A5***	A5***	N/A	N/A	A5***	N/A	A5***	A5***	A5***	A5***	N/A	N/A
		Closed	BS5	B5	B5	N/A	N/A	B5	N/A	B5	B5	B5	B5	N/A	N/A
	3000	Open	AS5***	A5***	A5***	N/A	N/A	A5***	N/A	A5***	A5***	A5***	A5***	N/A	N/A
		Closed	BS5	B5	B5	N/A	N/A	B5	N/A	B5	B5	B5	B5	N/A	N/A
	5000	Open	AS5***	A5***	A5***	N/A	N/A	A5***	N/A	A5***	A5***	A5***	A5***	N/A	N/A
		Closed	BS5	B5	B5	N/A	N/A	B5	N/A	B5	B5	B5	B5	N/A	N/A
	6000	Open	N/A	N/A	N/A	N/A	N/A	N/A	N/A	N/A	N/A	N/A	N/A	N/A	N/A
		Closed	N/A	N/A	N/A	N/A	N/A	N/A	N/A	N/A	N/A	N/A	N/A	N/A	N/A
6	2000	Open	AS6***	A6***	A6***	N/A	N/A	A6***	A6***	A6***	A6***	A6***	A6***	A6***	A6***
		Closed	BS6	B6	B6	N/A	N/A	B6	B6	B6	B6	B6	B6	B6	B6
	3000	Open	AS6***	A6***	A6***	N/A	N/A	A6***	A6***	A6***	A6***	A6***	A6***	A6***	A6***
		Closed	BS6	B6	B6	N/A	N/A	B6	B6	B6	B6	B6	B6	B6	B6
	5000	Open	AS6***	A6***	A6***	N/A	N/A	A6***	A6***	A6***	A6***	A6***	A6***	A6***	A6***
		Closed	BS6	B6	B6	N/A	N/A	B6	B6	B6	B6	B6	B6	B6	B6
	6000	Open	AS66***	A66***	A66***	N/A	N/A	A66***	A66***	A66***	A66***	A66***	A66***	A66***	A66***
		Closed	BS66000	B66000	B66000	N/A	N/A	B66000	B66000	B66000	B66000	B66000	B66000	B66000	B66000
7	2000	Open	AS7***	A7***	A7***	N/A	N/A	A7***	A7***	A7***	A7***	A7***	A7***	N/A	A7***
		Closed	BS7	B7	B7	N/A	N/A	B7	B7	B7	B7	B7	B7	N/A	B7
	3000	Open	AS7***	A7***	A7***	N/A	N/A	A7***	A7***	A7***	A7***	A7***	A7***	N/A	A7***
		Closed	BS7	B7	B7	N/A	N/A	B7	B7	B7	B7	B7	B7	N/A	B7
	5000	Open	AS7***	A7***	A7***	N/A	N/A	A7***	A7***	A7***	A7***	A7***	A7***	N/A	A7***
		Closed	BS7	B7	B7	N/A	N/A	B7	B7	B7	B7	B7	B7	N/A	B7
	6000	Open	AS76***	A76***	A76***	N/A	N/A	A76***	A76***	A76***	A76***	A76***	A76***	N/A	A76***
		Closed	BS76000	B76000	B76000	N/A	N/A	B76000	B76000	B76000	B76000	B76000	B76000	N/A	B76000
	9000	Open	AS7***	A7***	A7***	N/A	N/A	A7***	A7***	A7***	A7***	A7***	A7***	N/A	A7***
		Closed	BS7	B7	B7	N/A	N/A	B7	B7	B7	B7	B7	B7	N/A	B7
8	2000	Open	AS8***	A8***	A8***	N/A	N/A	A8***	A8***	A8***	A8***	A8***	A8***	A8***	A8***
		Closed	BS8	B8	B8	N/A	N/A	B8	B8	B8	B8	B8	B8	B8	B8
	3000	Open	AS8***	A8***	A8***	N/A	N/A	A8***	A8***	A8***	A8***	A8***	A8***	A8***	A8***
		Closed	BS8	B8	B8	N/A	N/A	B8	B8	B8	B8	B8	B8	B8	B8
	5000	Open	AS8***	A8***	A8***	N/A	N/A	A8***	A8***	A8***	A8***	A8***	A8***	A8***	A8***
		Closed	BS8	B8	B8	N/A	N/A	B8	B8	B8	B8	B8	B8	B8	B8
	6000	Open	AS86***	A86***	A86***	N/A	N/A	A86***	A86***	A86***	A86***	A86***	A86***	A86***	A86***
		Closed	BS86000	B86000	B86000	N/A	N/A	B86000	B86000	B86000	B86000	B86000	B86000	B86000	B86000
	9000	Open	AS8***	A8***	A8***	N/A	N/A	A8***	A8***	A8***	A8***	A8***	A8***	A8***	A8***
		Closed	BS8	B8	B8	N/A	N/A	B8	B8	B8	B8	B8	B8	B8	B8
9	2000	Open	AS9***	A9***	A9***	N/A	N/A	A9***	A9***	A9***	A9***	A9***	A9***	A9***	A9***
		Closed	BS9	B9	B9	N/A	N/A	B9	B9	B9	B9	B9	B9	B9	B9
	3000	Open	AS9***	A9***	A9***	N/A	N/A	A9***	A9***	A9***	A9***	A9***	A9***	A9***	A9***
		Closed	BS9	B9	B9	N/A	N/A	B9	B9	B9	B9	B9	B9	B9	B9
	5000	Open	AS9***	A9***	A9***	N/A	N/A	A9***	A9***	A9***	A9***	A9***	A9***	A9***	A9***
		Closed	BS9	B9	B9	N/A	N/A	B9	B9	B9	B9	B9	B9	B9	B9
	6000	Open	AS96***	A96***	A96***	N/A	N/A	A96***	A96***	A96***	A96***	A96***	A96***	A96***	A96***
		Closed	BS96000	B96000	B96000	N/A	N/A	B96000	B96000	B96000	B96000	B96000	B96000	B96000	B96000
	9000	Open	AS9***	A9***	A9***	N/A	N/A	A9***	A9***	A9***	A9***	A9***	A9***	A9***	A9***
		Closed	BS9	B9	B9	N/A	N/A	B9	B9	B9	B9	B9	B9	B9	B9
10	2000	Open	AS10***	A10***	A10***	N/A	N/A	A10***	A10***	A10***	A10***	N/A	N/A	A10***	A10***
		Closed	BS10	B10	B10	N/A	N/A	B10	B10	B10	B10	N/A	N/A	B10	B10
	3000	Open	AS10***	A10***	A10***	N/A	N/A	A10***	A10***	A10***	A10***	N/A	N/A	A10***	A10***
		Closed	BS10	B10	B10	N/A	N/A	B10	B10	B10	B10	N/A	N/A	B10	B10
	5000	Open	AS10***	A10***	A10***	N/A	N/A	A10***	A10***	A10***	A10***	N/A	N/A	A10***	A10***
		Closed	BS10	B10	B10	N/A	N/A	B10	B10	B10	B10	N/A	N/A	B10	B10
	6000	Open	AS106***	A106***	A106***	N/A	N/A	A106***	A106***	A106***	A106***	N/A	N/A	A106***	A106***
		Closed	BS106000	B106000	B106000	N/A	N/A	B106000	B106000	B106000	B106000	N/A	N/A	B106000	B106000
	9000	Open	AS10***	A10***	A10***	N/A	N/A	A10***	A10***	A10***	A10***	N/A	N/A	A10***	A10***
		Closed	BS10	B10	B10	N/A	N/A	B10	B10	B10	B10	N/A	N/A	B10	B10
11	2000	Open	AS11***	A11***	A11***	N/A	N/A	A11***	A11***	A11***	A11***	N/A	N/A	A11***	A11***
		Closed	BS11	B11	B11	N/A	N/A	B11	B11	B11	B11	N/A	N/A	B11	B11
	3000	Open	AS11***	A11***	A11***	N/A	N/A	A11***	A11***	A11***	A11***	N/A	N/A	A11***	A11***
		Closed	BS11	B11	B11	N/A	N/A	B11	B11	B11	B11	N/A	N/A	B11	B11
	5000	Open	AS11***	A11***	A11***	N/A	N/A	A11***	A11***	A11***	A11***	N/A	N/A	A11***	A11***
		Closed	BS11	B11	B11	N/A	N/A	B11	B11	B11	B11	N/A	N/A	B11	B11
	6000	Open	AS116***	A116***	A116***	N/A	N/A	A116***	A116***	A116***	A116***	N/A	N/A	A116***	A116***
		Closed	BS116000	B116000	B116000	N/A	N/A	B116000	B116000	B116000	B116000	N/A	N/A	B116000	B116000
	9000	Open	AS11***	A11***	A11***	N/A	N/A	A11***	A11***	A11***	A11***	N/A	N/A	A11***	A11***
		Closed	BS11	B11	B11	N/A	N/A	B11	B11	B11	B11	N/A	N/A	B11	B11

Auxiliary Cap Kit Part Number by Housing Style ‡ (Continued)

Size Code	Series	Aux Cap Style	HousingType												
			ZFS ◊	ZEF	ZBR	ZCS	ZMC	ZT	ZN	ZHT	ZST	ZAT ◊	ZFT	ZGT	ZNT
12	2000	Open	N/A	N/A	N/A	N/A	N/A	N/A	N/A	N/A	N/A	N/A	N/A	N/A	N/A
		Closed	N/A	N/A	N/A	N/A	N/A	N/A	N/A	N/A	N/A	N/A	N/A	N/A	N/A
	3000	Open	N/A	N/A	N/A	N/A	N/A	N/A	N/A	N/A	N/A	N/A	N/A	N/A	N/A
		Closed	N/A	N/A	N/A	N/A	N/A	N/A	N/A	N/A	N/A	N/A	N/A	N/A	N/A
	5000	Open	N/A	N/A	A12***	N/A	N/A	A12***	N/A	A12***	A12***	N/A	N/A	A12***	N/A
		Closed	N/A	N/A	B12	N/A	N/A	B12	N/A	B12	B12	N/A	N/A	B12	N/A
	6000	Open	N/A	N/A	A126***	N/A	N/A	A126***	N/A	A126***	A126***	N/A	N/A	A126***	N/A
		Closed	N/A	N/A	B126000	N/A	N/A	B126000	N/A	B126000	B126000	N/A	N/A	B126000	N/A
	9000	Open	N/A	N/A	A12***	N/A	N/A	A12***	N/A	A12***	A12***	N/A	N/A	A12***	N/A
		Closed	N/A	N/A	B12	N/A	N/A	B12	N/A	B12	B12	N/A	N/A	B12	N/A
13	2000	Open	N/A	N/A	N/A	N/A	N/A	N/A	N/A	N/A	N/A	N/A	N/A	N/A	N/A
		Closed	N/A	N/A	N/A	N/A	N/A	N/A	N/A	N/A	N/A	N/A	N/A	N/A	N/A
	3000	Open	N/A	N/A	N/A	N/A	N/A	N/A	N/A	N/A	N/A	N/A	N/A	N/A	N/A
		Closed	N/A	N/A	N/A	N/A	N/A	N/A	N/A	N/A	N/A	N/A	N/A	N/A	N/A
	5000	Open	AS13***	N/A	A13***	N/A	N/A	A13***	N/A	A13***	A13***	N/A	N/A	A13***	N/A
		Closed	BS13	N/A	B13	N/A	N/A	B13	N/A	B13	B13	N/A	N/A	B13	N/A
	6000	Open	AS136***	N/A	A136***	N/A	N/A	A136***	N/A	A136***	A136***	N/A	N/A	A136***	N/A
		Closed	BS136000	N/A	B136000	N/A	N/A	B136000	N/A	B136000	B136000	N/A	N/A	B136000	N/A
	9000	Open	AS13***	N/A	A13***	N/A	N/A	A13***	N/A	A13***	A13***	N/A	N/A	A13***	N/A
		Closed	BS13	N/A	B13	N/A	N/A	B13	N/A	B13	B13	N/A	N/A	B13	N/A
14	2000	Open	N/A	N/A	N/A	N/A	N/A	N/A	N/A	N/A	N/A	N/A	N/A	N/A	N/A
		Closed	N/A	N/A	N/A	N/A	N/A	N/A	N/A	N/A	N/A	N/A	N/A	N/A	N/A
	3000	Open	N/A	N/A	N/A	N/A	N/A	N/A	N/A	N/A	N/A	N/A	N/A	N/A	N/A
		Closed	N/A	N/A	N/A	N/A	N/A	N/A	N/A	N/A	N/A	N/A	N/A	N/A	N/A
	5000	Open	N/A	N/A	A14***	N/A	N/A	A14***	N/A	A14***	N/A	N/A	N/A	A14***	N/A
		Closed	N/A	N/A	B14	N/A	N/A	B14	N/A	B14	N/A	N/A	N/A	B14	N/A
	6000	Open Locknut Side	N/A	N/A	ALN146***	N/A	N/A	ALN146***	N/A	ALN146***	N/A	N/A	N/A	ALN146***	N/A
		Open Non Locknut Side	N/A	N/A	A146***	N/A	N/A	A146***	N/A	A146***	N/A	N/A	N/A	A146***	N/A
		Closed Locknut Side	N/A	N/A	BLN146000	N/A	N/A	BLN146000	N/A	BLN146000	N/A	N/A	N/A	BLN146000	N/A
		Closed Non Locknut Side	N/A	N/A	B146000	N/A	N/A	B146000	N/A	B146000	N/A	N/A	N/A	B146000	N/A
	9000	Open	N/A	N/A	A14***	N/A	N/A	A14***	N/A	A14***	N/A	N/A	N/A	A14***	N/A
		Closed	N/A	N/A	B14	N/A	N/A	B14	N/A	B14	N/A	N/A	N/A	B14	N/A
15	2000	Open	N/A	N/A	N/A	N/A	N/A	N/A	N/A	N/A	N/A	N/A	N/A	N/A	N/A
		Closed	N/A	N/A	N/A	N/A	N/A	N/A	N/A	N/A	N/A	N/A	N/A	N/A	N/A
	3000	Open	N/A	N/A	N/A	N/A	N/A	N/A	N/A	N/A	N/A	N/A	N/A	N/A	N/A
		Closed	N/A	N/A	N/A	N/A	N/A	N/A	N/A	N/A	N/A	N/A	N/A	N/A	N/A
	5000	Open	N/A	N/A	A15***	N/A	N/A	A15***	N/A	A15***	N/A	N/A	N/A	A15***	N/A
		Closed	N/A	N/A	B15	N/A	N/A	B15	N/A	B15	N/A	N/A	N/A	B15	N/A
	6000	Open Locknut Side	N/A	N/A	ALN156***	N/A	N/A	ALN156***	N/A	ALN156***	N/A	N/A	N/A	ALN156***	N/A
		Open Non Locknut Side	N/A	N/A	A156***	N/A	N/A	A156***	N/A	A156***	N/A	N/A	N/A	A156***	N/A
		Closed Locknut Side	N/A	N/A	BLN156000	N/A	N/A	BLN156000	N/A	BLN156000	N/A	N/A	N/A	BLN156000	N/A
		Closed Non Locknut Side	N/A	N/A	B156000	N/A	N/A	B156000	N/A	B156000	N/A	N/A	N/A	B156000	N/A
	9000	Open	N/A	N/A	A15***	N/A	N/A	A15***	N/A	A15***	N/A	N/A	N/A	A15***	N/A
		Closed	N/A	N/A	B15	N/A	N/A	B15	N/A	B15	N/A	N/A	N/A	B15	N/A
16	2000	Open	N/A	N/A	N/A	N/A	N/A	N/A	N/A	N/A	N/A	N/A	N/A	N/A	N/A
		Closed	N/A	N/A	N/A	N/A	N/A	N/A	N/A	N/A	N/A	N/A	N/A	N/A	N/A
	3000	Open	N/A	N/A	N/A	N/A	N/A	N/A	N/A	N/A	N/A	N/A	N/A	N/A	N/A
		Closed	N/A	N/A	N/A	N/A	N/A	N/A	N/A	N/A	N/A	N/A	N/A	N/A	N/A
	5000	Open	N/A	N/A	A16***	N/A	N/A	A16***	N/A	A16***	N/A	N/A	N/A	A16***	N/A
		Closed	N/A	N/A	B16	N/A	N/A	B16	N/A	B16	N/A	N/A	N/A	B16	N/A
	6000	Open Locknut Side	N/A	N/A	ALN166***	N/A	N/A	ALN166***	N/A	ALN166***	N/A	N/A	N/A	ALN166***	N/A
		Open Non Locknut Side	N/A	N/A	A166***	N/A	N/A	A166***	N/A	A166***	N/A	N/A	N/A	A166***	N/A
		Closed Locknut Side	N/A	N/A	BLN166000	N/A	N/A	BLN166000	N/A	BLN166000	N/A	N/A	N/A	BLN166000	N/A
		Closed Non Locknut Side	N/A	N/A	B166000	N/A	N/A	B166000	N/A	B166000	N/A	N/A	N/A	B166000	N/A
	9000	Open	N/A	N/A	A16***	N/A	N/A	A16***	N/A	A16***	N/A	N/A	N/A	A16***	N/A
		Closed	N/A	N/A	B16	N/A	N/A	B16	N/A	B16	N/A	N/A	N/A	B16	N/A

‡ Housings are not drilled to accept auxiliary caps as standard.
*** Indicates shaft size in inches, i.e. the open cap for a ZA2107 would be A4107
◊ See specific product page for applicability.

ZAF5000, ZAFS5000

Interchange: *TAF, USRB5500, (E)RPBXT*

Photo Shows a 2-Bolt Spherical Roller Bearing Pillow Block Unit

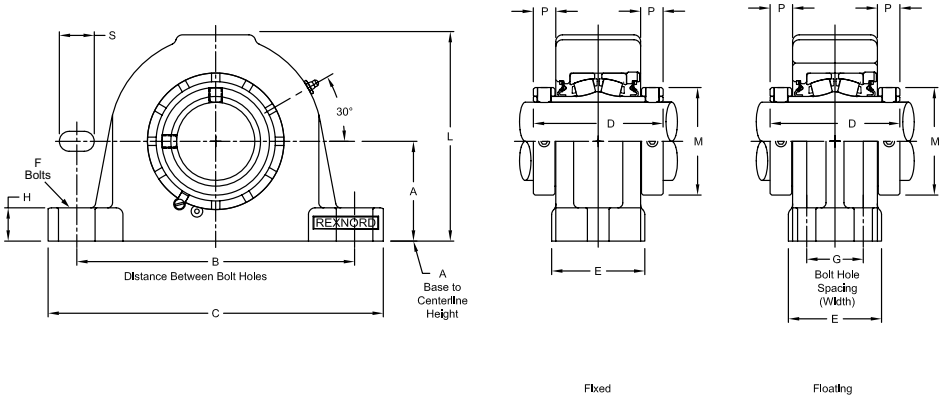

Product Features

- SAF Interchange
- Precision milled ends
- Corrosion-resistant powder coating
- Cast iron housing
- Misalignment capabilities - total of 4°
- Broad range of sealing options
- Factory set clearance & lubrication
- Precision ground & superfinished raceways
- See Features and Benefits for additional info on pages 10 - 13.

Bearing Dimensions

Size Code	Shaft Diameter	Expansion Part Number	Expansion L	Expansion P	Expansion Approx. Weight	Fixed Part Number	Fixed L	Fixed P	Fixed Approx. Weight	A Base to Centerline Height	B Distance Between Bolt Holes Min.	B Distance Between Bolt Holes Max.	G Bolt Hole Spacing (Width)	C	D	E	F Bolts	H	M	S
Two-Bolt Pillow Block																				
6	1 15/16	ZAFS5115	5 5/16	11/16	20.00	ZAF5115	5 5/16	11/16	16.50	2 3/4	7 3/8	7 7/8	-	9.625	3 13/16	2 3/4	5/8	1	2 7/8	15/16
	50.00	*ZAFS5050MM*	*134.94*	*17.46*	*9.00*	*ZAF5050MM*	*134.94*	*17.46*	*7.50*	*69.85*	*187.33*	*200.03*	*-*	*244.480*	*96.84*	*69.85*	*16.00*	*25.40*	*73.03*	*23.81*
7	2 3/16	ZAFS5203	5 31/32	13/16	25.50	ZAF5203	5 31/32	13/16	21.00	3	8 1/8	9 1/2	-	11.000	4 1/8	3 1/8	5/8	1	3 1/4	1 3/8
	55.00	*ZAFS5055MM*	*151.61*	*20.64*	*11.50*	*ZAF5055MM*	*151.61*	*20.64*	*9.50*	*76.20*	*206.38*	*241.30*	*-*	*279.400*	*104.78*	*79.38*	*16.00*	*25.40*	*82.60*	*34.93*
8	2 7/16	ZAFS5207	6 25/32	7/8	32.50	ZAF5207	6 25/32	7/8	32.50	3 1/4	8 5/8	9 5/8	-	11.125	4 3/8	3 1/8	5/8	1 1/4	3 9/16	1 3/16
	60.00	*ZAFS5060MM*	*172.24*	*22.23*	*14.70*	*ZAF5060MM*	*172.24*	*22.23*	*14.70*	*82.55*	*219.08*	*244.48*	*-*	*282.580*	*111.13*	*79.38*	*16.00*	*31.75*	*90.50*	*30.16*
	65.00	*ZAFS5065MM*				*ZAF5065MM*														
9	2 11/16	ZAFS5211	7 1/2	7/8	45.50	ZAF5211	7 1/2	7/8	45.50	3 1/2	9 7/8	11	-	12.590	4 7/8	3 1/2	3/4	1	4 1/16	1 3/8
	2 3/4	ZAFS5212				ZAF5212														
	2 15/16	ZAFS5215	7 3/4		45.00	ZAF5215	7 3/4		45.00	3 3/4			-					1 1/4		
	70.00	*ZAFS5070MM*	*190.50*	*22.23*	*20.60*	*ZAF5070MM*	*190.50*	*22.23*	*20.60*	*88.90*	*250.83*	*279.40*	*-*	*319.790*	*123.83*	*88.90*	*19.00*	*25.40*	*103.20*	*34.93*
	75.00	*ZAFS5075MM*	*196.85*		*20.40*	*ZAF5075MM*	*196.85*		*20.40*	*95.25*			*-*					*31.75*		
10	3 3/16	ZAFS5303	8 1/4	15/16	60.00	ZAF5303	8 1/4	15/16	53.00	4	10 3/8	11 5/8	-	13.750	5 5/16	3 7/8	3/4	1 5/8	4 29/32	1 7/16
	3 7/16	ZAFS5307	9 9/32		76.50	ZAF5307	9 9/32		76.50	4 1/2	11 5/8	13 1/8	-	15.375		4 11/32	7/8	1 21/32		1 11/16
	80.00	*ZAFS5080MM*	*209.55*	*23.81*	*27.00*	*ZAF5080MM*	*209.55*	*23.81*	*24.00*	*101.60*	*263.53*	*295.28*	*-*	*349.250*	*134.94*	*98.43*	*19.00*	*41.28*	*124.62*	*36.51*
	85.00	*ZAFS5085MM*	*235.74*		*34.70*	*ZAF5085MM*	*235.74*		*34.70*	*114.30*	*295.28*	*333.38*	*-*	*390.530*		*110.31*	*22.00*	*42.06*		*42.86*
	90.00	*ZAFS5090MM*			*34.40*	*ZAF5090MM*			*34.40*											
Four-Bolt Pillow Block																				
8	2 7/16	ZAFS5207F	6 25/32	7/8	31.50	ZAF5207F	6 25/32	7/8	31.00	3 1/4	8 5/8	9 5/8	1 7/8	11.125	4 3/8	3 1/8	1/2	1 1/4	3 9/16	1 1/16
	60.00	*ZAFS5060MMF*	*172.24*	*22.23*	*14.00*	*ZAF5060MMF*	*172.24*	*22.23*	*14.00*	*82.55*	*219.08*	*244.48*	*47.63*	*282.580*	*111.13*	*79.38*	*13.00*	*31.75*	*90.50*	*26.99*
	65.00	*ZAFS5065MMF*				*ZAF5065MMF*														
9	2 11/16	ZAFS5211F	7 1/2	7/8	45.50	ZAF5211F	7 1/2	7/8	45.00	3 1/2	9 7/8	11	2 1/8	12.590	4 7/8	3 1/2	5/8	1	4 1/16	1 1/4
	2 3/4	ZAFS5212F				ZAF5212F														
	2 15/16	ZAFS5215F	7 3/4		44.50	ZAF5215F	7 3/4		44.50	3 3/4								1 1/4		
	70.00	*ZAFS5070MMF*	*190.50*	*22.23*	*20.60*	*ZAF5070MMF*	*190.50*	*22.23*	*20.40*	*88.90*	*250.83*	*279.40*	*53.98*	*319.790*	*123.83*	*88.90*	*16.00*	*25.40*	*103.20*	*31.75*
	75.00	*ZAFS5075MMF*	*196.85*		*20.00*	*ZAF5075MMF*	*196.85*		*20.00*	*95.25*								*31.75*		
10	3 3/16	ZAFS5303F	8 1/4	15/16	60.00	ZAF5303F	8 1/4	15/16	53.00	4	10 3/8	11 5/8	2 1/8	13.750	5 5/16	3 7/8	5/8	1 5/8	4 29/32	1 5/16
	3 7/16	ZAFS5307F	9 9/32		75.50	ZAF5307F	9 9/32		75.00	4 1/2	11 5/8	13 1/8	2 3/8	15.375		4 11/32	3/4	1 21/32		1 9/16
	80.00	*ZAFS5080MMF*	*209.55*	*23.81*	*27.00*	*ZAF5080MMF*	*209.55*	*23.81*	*24.00*	*101.60*	*263.53*	*295.28*	*53.98*	*349.250*	*134.94*	*98.43*	*16.00*	*41.28*	*124.62*	*33.34*
	85.00	*ZAFS5085MMF*	*235.74*		*34.00*	*ZAF5085MMF*	*235.74*		*34.00*	*114.30*	*295.28*	*333.38*	*60.33*	*390.530*		*110.31*	*19.00*	*42.06*		*39.69*
	90.00	*ZAFS5090MMF*			*33.60*	*ZAF5090MMF*			*33.60*											
11	3 15/16	ZAFS5315F	10 5/16	1 1/32	104.00	ZAF5315F	10 5/16	1 1/32	102.00	4 15/16	12 19/32	14 1/2	2 3/4	16.500	6 1/8	4 3/4	3/4	1 25/32	5 5/8	1 53/64
	100.00	*ZAFS5100MMF*	*261.94*	*26.19*	*47.00*	*ZAF5100MMF*	*261.94*	*26.19*	*46.00*	*125.41*	*319.86*	*368.30*	*69.85*	*419.100*	*155.58*	*120.65*	*19.00*	*45.24*	*142.90*	*46.43*
12	4 7/16	ZAFS5407YF	11 7/8	1 1/16	144.00	ZAF5407YF	11 7/8	1 1/16	143.00	6	14 1/2	16	3 1/4	18.375	6 1/4	5 1/8	7/8	2 1/16	6 3/16	1 3/4
	110.00	*ZAFS5110MMF*	*301.63*	*26.99*	*65.00*	*ZAF5110MMF*	*301.63*	*26.99*	*64.80*	*152.40*	*368.30*	*406.40*	*82.55*	*466.730*	*158.75*	*130.18*	*22.00*	*52.39*	*157.16*	*44.45*

Continued...

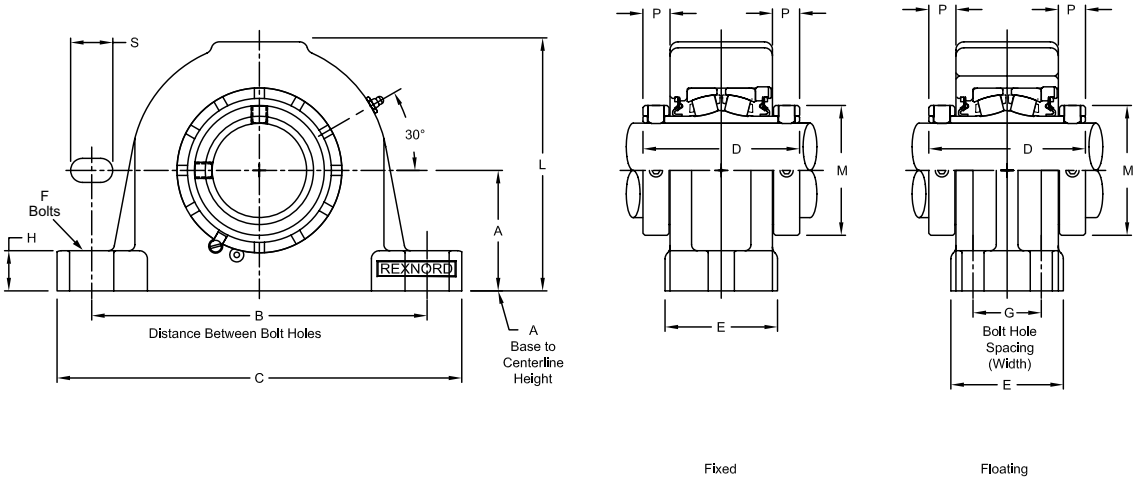

Continued...

Bearing Dimensions

Size Code	Shaft Diameter	Expansion Part Number	Expansion L	Expansion P	Expansion Approx. Weight	Fixed Part Number	Fixed L	Fixed P	Fixed Approx. Weight	A Base to Centerline Height	B Distance Between Bolt Holes Min.	B Distance Between Bolt Holes Max.	G Bolt Hole Spacing (Width)	C	D	E	F Bolts	H	M	S
Four-Bolt Pillow Block (continued)																				
12	*115.00*	*ZAFS5115MMF*	*301.63*	*26.99*	*65.00*	*ZAF5115MMF*	*301.63*	*26.99*	*64.80*	*152.40*	*368.30*	*406.40*	*82.55*	*466.730*	*158.75*	*130.18*	*22.00*	*52.39*	*157.16*	*44.45*
13	4 15/16	ZAFS5415F	12 9/16	1 5/32	209.00	ZAF5415F	12 9/16	1 5/32	207.00	6	15 5/8	17 3/8	3 3/8	19.700	7 7/8	5 7/8	1	2 1/16	7 1/16	1 15/16
	125.00	*ZAFS5125MMF*	*319.09*	*29.37*	*95.00*	*ZAF5125MMF*	*319.09*	*29.37*	*94.00*	*152.40*	*390.53*	*441.33*	*85.73*	*500.380*	*200.03*	*149.23*	*25.00*	*52.39*	*179.39*	*49.21*
	130.00	*ZAFS5130MMF*				*ZAF5130MMF*														
14	5 7/16	ZAFS5507F	13 11/16	1 3/32	248.00	ZAF5507F	13 7/16	1 7/32	233.00	6 11/16	17 3/8	19 1/4	3 3/4	22.000	8	6 1/4	1	2 5/8	8 3/16	2
	140.00	*ZAFS5140MMF*	*347.66*	*27.76*	*112.00*	*ZAF5140MMF*	*341.31*	*30.96*	*106.00*	*169.86*	*441.33*	*488.95*	*95.25*	*558.800*	*203.20*	*158.75*	*25.00*	*66.68*	*207.96*	*50.80*
15	5 15/16	ZAFS5515F	14 9/16	1 1/16	295.00	ZAF5515F	14 1/4	1 5/32	274.00	7 1/16	19 3/8	21 5/8	4 1/4	24.750	8 1/8	6 3/4	1	2 3/4	8 5/8	2 3/16
	6	ZAFS5600F			290.00	ZAF5600F			269.00											
	150.00	*ZAFS5150MMF*	*369.88*	*26.99*	*131.00*	*ZAF5150MMF*	*361.95*	*29.37*	*124.00*	*179.39*	*492.13*	*549.28*	*107.95*	*628.650*	*206.38*	*171.45*	*25.00*	*69.85*	*219.08*	*55.56*
	160.00	*ZAFS5160MMF*				*ZAF5160MMF*														
16	6 7/16	ZAFS5607F	15 3/4	1 3/16	355.00	ZAF5607F	15 5/16	1 9/32	337.00	7 1/2	20 7/8	23 5/8	4 5/8	26.750	8 3/4	7 1/8	1	3	9 23/32	2 7/16
	6 1/2	ZAFS5608F			353.00	ZAF5608F			335.00											
	6 15/16	ZAFS5615F	16 1/8		376.00	ZAF5615F	15 11/16		347.00	7 7/8	21 5/8	24 3/8	4 1/2	28.000		7 1/2	1 1/4	3 1/8		2 11/16
	7	ZAFS5700F			372.00	ZAF5700F			345.00											
	180.00	*ZAFS5180MMF*	*409.58*	*30.16*	*169.00*	*ZAF5180MMF*	*398.46*	*32.54*	*169.00*	*200.03*	*549.28*	*619.13*	*114.30*	*711.200*	*222.25*	*190.50*	*32.00*	*79.38*	*246.86*	*68.26*

Additional Notes

Please call 1-866-REXNORD for availability

Metric bore sizes available, see the Rex Interchangeability guide

Lubrication fitting tap size: for size code 6 thru 11, 1/8" PT: for all other size codes, 1/4" PT

Base to centerline tolerance, +/-.005 in *(+/-0.13 mm)*

Bore size = nominal shaft size +.001 in/-.000 in *(+0.03 mm/-0.00 mm)*

Expansion - size code 6-8 is 3/8", size code 9 thru 11 is 1/2" & size code 12 thru 16 is 3/4"

Seals - To specify G, K or M seal, replace "Z" in part number with "G", "K" or "M"

"K" seals only available in size codes 6 thru 11

"G" seals available in size codes 3 thru 13

Auxiliary end caps - available in all sizes

Pad length tolerance, +/-.0075 in *(+/-0.19 mm)* for size codes 6 thru 13, +/-.015 in *(+/-0.38 mm)* for size codes 14 thru 16

For the Selection Guide, Load Ratings and Speed Limits, see the Spherical Roller Bearings Engineering section on pages 15 - 27.

Note: Dimensions subject to change. Certified dimensions of ordered material furnished on request.

ZAF6000, ZAFS6000

Interchange: *ISAF, USRB5500A, QVVPA, QVVPH, TAPA, TAPH*

Photo Shows a 2-Bolt Spherical Roller Bearing Pillow Block Unit

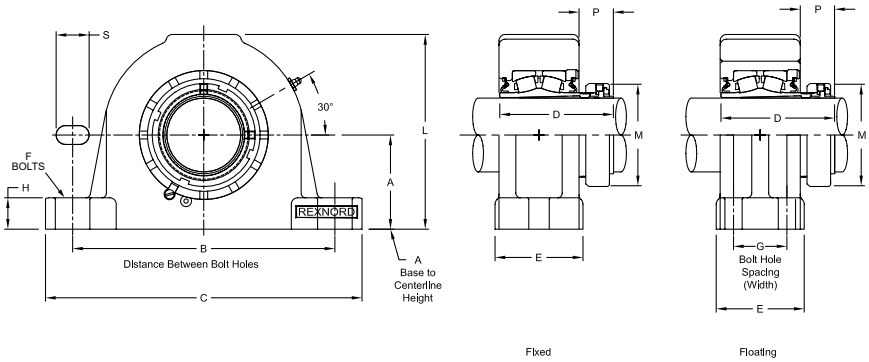

Product Features

- Spyglass Optical Strain Sensor (OSS) Technology
- Positive locking system
- Tapered adapter sleeve
- SAF Interchange
- Precision milled ends
- Corrosion-resistant powder coating
- Cast iron housing
- Misalignment capabilities - total of 4°
- Broad range of sealing options
- See Features and Benefits for additional info on pages 10 - 13.

Bearing Dimensions

Size Code	Shaft Diameter	Expansion Part Number	Expansion L	Expansion P	Expansion Approx. Weight	Fixed Part Number	Fixed L	Fixed P	Fixed Approx. Weight	A Base to Centerline Height	B Distance Between Bolt Holes Min.	B Distance Between Bolt Holes Max.	G Bolt Hole Spacing (Width)	C	D	E	F Bolts	H	M	S
Two-Bolt Pillow Block																				
6	1 15/16	ZAFS6115	5 5/16	1 1/8	20.00	ZAF6115	5 5/16	1 1/8	16.50	2 3/4	7 3/8	7 7/8	-	9.625	3 41/64	2 3/4	5/8	1	2 55/64	15/16
	45.00	*ZAFS6045MM*	*134.94*	*28.58*	*9.00*	*ZAF6045MM*	*134.94*	*28.58*	*7.50*	*69.85*	*187.33*	*200.03*	*-*	*244.480*	*92.47*	*69.85*	*16.00*	*25.40*	*72.63*	*23.81*
7	2 3/16	ZAFS6203	5 31/32	1 5/32	25.50	ZAF6203	5 31/32	1 5/32	21.00	3	8 1/8	9 1/2	-	11.000	3 11/16	3 1/8	5/8	1	3 15/64	1 3/8
	55.00	*ZAFS6055MM*	*151.61*	*29.37*	*11.50*	*ZAF6055MM*	*151.61*	*29.37*	*9.50*	*76.20*	*206.38*	*241.30*	*-*	*279.400*	*93.66*	*79.38*	*16.00*	*25.40*	*82.15*	*34.93*
8	2 3/8	ZAFS6206	6 25/32	1 27/64	32.50	ZAF6206	6 25/32	1 27/64	32.50	3 1/4	8 5/8	9 5/8	-	11.125	4 1/16	3 1/8	5/8	1 1/4	3 19/32	1 3/16
	2 7/16	ZAFS6207				ZAF6207														
	60.00	*ZAFS6060MM*	*172.24*	*36.12*	*14.70*	*ZAF6060MM*	*172.24*	*36.12*	*14.70*	*82.55*	*219.08*	*244.48*	*-*	*282.580*	*103.19*	*79.38*	*16.00*	*31.75*	*91.28*	*30.16*
9	2 11/16	ZAFS6211	7 1/2	1 25/64	45.00	ZAF6211	7 1/2	1 25/64	45.00	3 1/2	9 7/8	11	-	12.590	4 17/32	3 1/2	3/4	1	4 3/32	1 3/8
	2 3/4	ZAFS6212				ZAF6212														
	2 15/16	ZAFS6215	7 3/4			ZAF6215	7 3/4			3 3/4			-					1 1/4		
	70.00	*ZAFS6070MM*	*190.50*	*35.32*	*20.60*	*ZAF6070MM*	*190.50*	*35.32*	*20.60*	*88.90*	*250.83*	*279.40*	*-*	*319.790*	*115.09*	*88.90*	*19.00*	*25.40*	*103.98*	*34.93*
	75.00	*ZAFS6075MM*	*196.85*		*20.40*	*ZAF6075MM*	*196.85*		*20.40*	*95.25*			*-*					*31.75*		
10	3 3/16	ZAFS6303	8 1/4	1 19/32	59.00	ZAF6303	8 1/4	1 19/32	52.00	4	10 3/8	11 5/8	-	13.750	5 1/32	3 7/8	3/4	1 5/8	4 61/64	1 7/16
	3 7/16	ZAFS6307	9 9/32	1 19/32	76.50	ZAF6307	9 9/32	1 19/32	76.50	4 1/2	11 5/8	13 1/8	-	15.375	5 1/32	4 11/32	7/8	1 21/32	4 61/64	1 11/16
	80.00	*ZAFS6080MM*	*209.55*	*40.48*	*27.00*	*ZAF6080MM*	*209.55*	*40.48*	*24.00*	*101.60*	*263.53*	*295.28*	*-*	*349.250*	*127.79*	*98.43*	*19.00*	*41.28*	*125.81*	*36.51*
	85.00	*ZAFS6085MM*	*235.74*		*34.70*	*ZAF6085MM*	*235.74*		*34.70*	*114.30*	*295.28*	*333.38*	*-*	*390.530*		*110.31*	*22.00*	*42.06*		*42.86*
Four-Bolt Pillow Block																				
8	2 3/8	ZAFS6206F	6 25/32	1 27/64	31.00	ZAF6206F	6 25/32	1 27/64	31.00	3 1/4	8 5/8	9 5/8	1 7/8	11.125	4 1/16	3 1/8	1/2	1 1/4	3 19/32	1 1/16
	2 7/16	ZAFS6207F				ZAF6207F														
	60.00	*ZAFS6060MMF*	*172.24*	*36.12*	*14.00*	*ZAF6060MMF*	*172.24*	*36.12*	*14.00*	*82.55*	*219.08*	*244.48*	*47.63*	*282.580*	*103.19*	*79.38*	*13.00*	*31.75*	*91.28*	*26.99*
9	2 11/16	ZAFS6211F	7 1/2	1 25/64	44.50	ZAF6211F	7 1/2	1 25/64	44.50	3 1/2	9 7/8	11	2 1/8	12.590	4 17/32	3 1/2	5/8	1	4 3/32	1 1/4
	2 3/4	ZAFS6212F				ZAF6212F														
	2 15/16	ZAFS6215F	7 3/4			ZAF6215F	7 3/4			3 3/4								1 1/4		
	70.00	*ZAFS6070MMF*	*190.50*	*35.32*	*20.60*	*ZAF6070MMF*	*190.50*	*35.32*	*20.40*	*88.90*	*250.83*	*279.40*	*53.98*	*319.790*	*115.09*	*88.90*	*16.00*	*25.40*	*103.98*	*31.75*
	75.00	*ZAFS6075MMF*	*196.85*		*20.00*	*ZAF6075MMF*	*196.85*		*20.00*	*95.25*								*31.75*		
10	3 3/16	ZAFS6303F	8 1/4	1 19/32	59.00	ZAF6303F	8 1/4	1 19/32	52.00	4	10 3/8	11 5/8	2 1/8	13.750	5 1/32	3 7/8	5/8	1 5/8	4 61/64	1 5/16
	3 7/16	ZAFS6307F	9 9/32		75.00	ZAF6307F	9 9/32		75.00	4 1/2	11 5/8	13 1/8	2 3/8	15.375		4 11/32	3/4	1 21/32		1 9/16
	80.00	*ZAFS6080MMF*	*209.55*	*40.48*	*27.00*	*ZAF6080MMF*	*209.55*	*40.48*	*24.00*	*101.60*	*263.53*	*295.28*	*53.98*	*349.250*	*127.79*	*98.43*	*16.00*	*41.28*	*125.81*	*33.34*
	85.00	*ZAFS6085MMF*	*235.74*		*34.00*	*ZAF6085MMF*	*235.74*		*34.00*	*114.30*	*295.28*	*333.38*	*60.33*	*390.530*		*110.31*	*19.00*	*42.06*		*39.69*
11	3 11/16	ZAFS6311F	10 5/16	1 47/64	103.00	ZAF6311F	10 5/16	1 47/64	103.00	4 15/16	12 19/32	14 1/2	2 3/4	16.500	5 25/32	4 3/4	3/4	1 25/32	5 43/64	1 53/64
	3 15/16	ZAFS6315F				ZAF6315F														
	90.00	*ZAFS6090MMF*	*261.94*	*44.05*	*47.00*	*ZAF6090MMF*	*261.94*	*44.05*	*46.00*	*125.41*	*319.86*	*368.30*	*69.85*	*419.100*	*146.84*	*120.65*	*19.00*	*45.24*	*144.07*	*46.43*
	100.00	*ZAFS6100MMF*				*ZAF6100MMF*														
12	4 3/16	ZAFS6403YF	11 7/8	1 7/8	144.00	ZAF6403YF	11 7/8	1 7/8	144.00	6	14 1/2	16	3 1/4	18.375	6 1/4	5 1/8	7/8	2 1/16	6 1/16	1 3/4
	4 7/16	ZAFS6407YF				ZAF6407YF														
	110.00	*ZAFS6110MMF*	*301.63*	*47.63*	*65.00*	*ZAF6110MMF*	*301.63*	*47.63*	*64.80*	*152.40*	*368.30*	*406.40*	*82.55*	*466.730*	*158.75*	*130.18*	*22.00*	*52.39*	*153.99*	*44.45*

Continued...

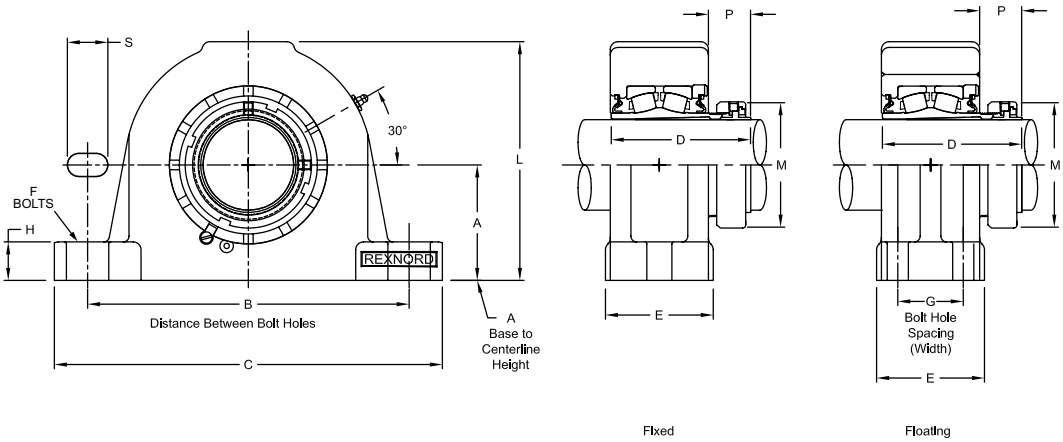

Continued...

Bearing Dimensions

Size Code	Shaft Diameter	Expansion Part Number	Expansion L	Expansion P	Expansion Approx. Weight	Fixed Part Number	Fixed L	Fixed P	Fixed Approx. Weight	A Base to Centerline Height	B Distance Between Bolt Holes Min.	B Distance Between Bolt Holes Max.	G Bolt Hole Spacing (Width)	C	D	E	F Bolts	H	M	S
Four-Bolt Pillow Block (continued)																				
13	4 15/16	ZAFS6415F	12 9/16	2 1/4	208.00	ZAF6415F	12 9/16	2 1/4	208.00	6	15 5/8	17 3/8	3 3/8	19.700	7 15/16	5 7/8	1	2 1/16	6 61/64	1 15/16
	125.00	*ZAFS6125MMF*	*319.09*	*57.15*	*95.00*	*ZAF6125MMF*	*319.09*	*57.15*	*94.00*	*152.40*	*390.53*	*441.33*	*85.73*	*500.380*	*201.61*	*149.23*	*25.00*	*52.39*	*176.61*	*49.21*
14	5 7/16	ZAFS6507F	13 11/16	2 15/16	248.00	ZAF6507F	13 7/16	3 3/64	233.00	6 11/16	17 3/8	19 1/4	3 3/4	22.000	8 49/64	6 1/4	1	2 5/8	8 1/64	2
15	5 15/16	ZAFS6515F	14 9/16	3 23/64	295.00	ZAF6515F	14 1/4	3 7/16	274.00	7 1/16	19 3/8	21 5/8	4 1/4	24.750	9 19/64	6 3/4	1	2 3/4	8 21/32	2 3/16
16	6 7/16	ZAFS6607F	15 3/4	3 37/64	355.00	ZAF6607F	15 5/16	3 43/64	337.00	7 1/2	20 7/8	23 5/8	4 5/8	26.750	10	7 1/8	1	3	9 3/4	2 7/16
	6 15/16	ZAFS6615F	16 1/8	3 37/64	376.00	ZAF6615F	15 11/16	3 43/64	347.00	7 7/8	21 5/8	24 3/8	4 1/2	28.000	10	7 1/2	1 1/4	3 1/8	9 3/4	2 11/16

Additional Notes

Please call 1-866-REXNORD for availability

Metric bore sizes available, see the Rex Interchangeability guide

Lubrication fitting tap size: for size code 6 thru 11, 1/8" PT: for all other size codes, 1/4" PT

Base to centerline tolerance, +/-.005 in *(+/-0.13 mm)*

Expansion - size code 6-8 is 3/8", size code 9 thru 11 is 1/2" & size code 12 thru 16 is 3/4"

Seals - To specify G, K or M seal, replace "Z" in part number with "G", "K" or "M"

"G" seals available in size code 13

Auxiliary end caps - available in all sizes

Pad length tolerance, +/-.0075 in *(+/-0.19 mm)* for size codes 6 thru 13, +/-.015 in *(+/-0.38 mm)* for size codes 14 thru 16

For the Selection Guide, Load Ratings and Speed Limits, see the Spherical Roller Bearings Engineering section on pages 15 - 27.

Note: Dimensions subject to change. Certified dimensions of ordered material furnished on request.

ZLF6000

Interchange: *ISAF, USRB5500A, QVVPH*

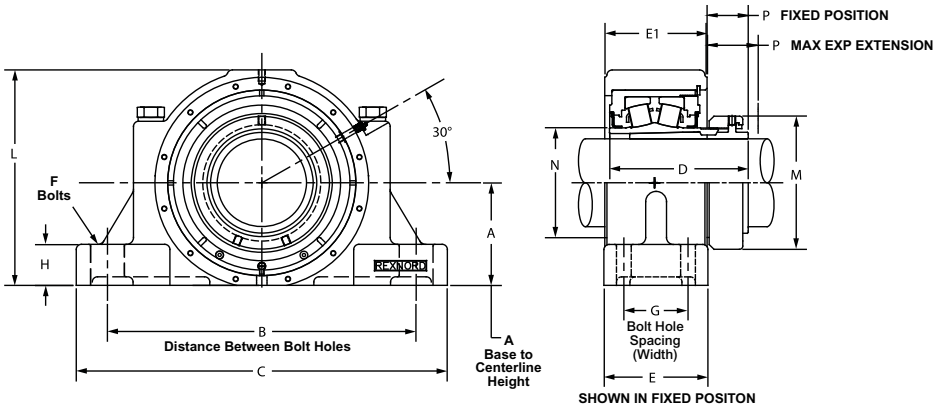

Product Features

- Spyglass Optical Strain Sensor (OSS) Technology
- Positive locking system
- Tapered adapter sleeve
- SAF Interchange
- Precision milled ends
- Corrosion-resistant powder coating
- Cast iron split housing
- Pre-Drilled/Tapped for Auxiliary Caps
- Unitized cartridge bearing
- Misalignment capabilities - total of 4˚
- Broad range of sealing options
- See Features and Benefits for additional info on pages 10 - 13.

Bearing Dimensions

Size Code	Shaft Diameter	Expansion			Fixed			A Base to Centerline Height	B Distance Between Bolt Holes		G Bolt Hole Spacing (Width)	C	D	E	E1	F (Bolts)	H	M	N	Approx. Weight
		Part Number	L	P (Max Expansion)	Part Number	L	P		Min.	Max.										
14	5 7/16	ZLFS6507F	13 11/16	3 3/64	ZLF6507F	13 11/16	2 11/32	6 11/16	17 3/8	19 1/4	3 3/4	22	8 49/64	6 1/4	6 3/4	1	2 5/8	8 1/64	6 1/2	248
15	5 15/16	ZLFS6515F	14 9/16	3 7/16	ZLF6515F	14 9/16	2 47/64	7 1/16	19 3/8	21 5/8	4 1/4	24 3/4	9 19/64	6 3/4	7	1	2 3/4	8 21/32	7 13/64	295
16	6 7/16	ZLFS6607F	15 3/4	3 43/64	ZLF6607F	15 3/4	2 31/32	7 1/2	20 7/8	23 5/8	4 5/8	26 3/4	10	7 1/2	7 3/8	1	3	9 3/4	8 3/64	355
	6 15/16	ZLFS6615F	16 1/8	3 43/64	ZLF6615F	16 1/8	2 31/32	7 7/8	21 5/8	24 3/8	4 1/2	28	10	7 1/2	7 3/8	1 1/4	3 1/8	9 3/4	8 3/64	376

Additional Notes

- Please call 1-866-REXNORD for availability
- Lubrication fitting tap size 1/4" PT
- Base to centerline +/-.005 in *(+/-0.13 mm)*
- Bore size = nominal shaft size +.001"/-.000"
- Seals - To specify M seal, replace "Z" in part number with "M"
- Auxiliary end caps - available except as noted
- Expansion - 3/4"

For the Selection Guide, Load Ratings and Speed Limits, see the Spherical Roller Bearings Engineering section on pages 15 - 27.

Note: Dimensions subject to change. Certified dimensions of ordered material furnished on request.

ZA2000, ZAS2000

Interchange: *P2BS2, P4BS2, (F)SYR, USRB5000, QAPL, QAPF*

Photo Shows a 2-Bolt Spherical Roller Bearing Pillow Block Unit

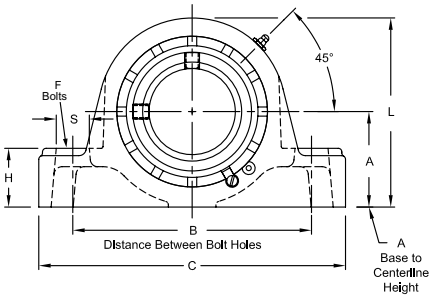

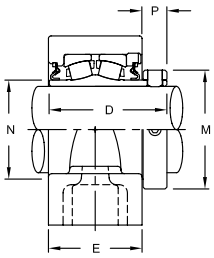

Fixed Block

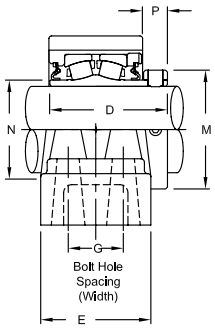

Floating Block

Product Features

- Corrosion-resistant powder coating
- Cast iron housing
- Misalignment capabilities - total of 4°
- Broad range of sealing options
- Factory set clearance & lubrication
- Precision ground & superfinished raceways
- Hardened spring locking collar
- Field interchangeable seals
- Fixed or Expansion - total of 3/8" expansion
- See Features and Benefits for additional info on pages 10 - 13.

Bearing Dimensions

Size Code	Shaft Diameter	Expansion						Fixed						A Base to Center-line Height	B Distance Between Bolt Holes	D	F Bolts	G Bolt Hole Spacing	M	N	P	Approx. Weight
		Part Number	C	E	H	L	S	Part Number	C	E	H	L	S									
Two-Bolt Pillow Block																						
2	3/4	-	-	-	-	-	-	ZA2012	5 7/8	2	3/4	3 1/16	7/8	1 9/16	4 3/8	2 9/16	1/2	-	1 3/4	1 5/16	9/16	4.40
	15/16	-	-	-	-	-	-	ZA2015														4.30
	1	-	-	-	-	-	-	ZA2100														4.20
	25.00	-	-	-	-	-	-	*ZA2025MM*	*149.23*	*50.80*	*19.05*	*77.79*	*22.23*	*39.69*	*111.13*	*65.09*	*13.00*	-	*44.45*	*33.34*	*14.29*	*2.00*
3	1 1/8	-	-	-	-	-	-	ZA2102	6 5/16	2 1/8	7/8	3 7/16	7/8	1 3/4	4 3/4	2 11/16	1/2	-	2	1 17/32	9/16	5.50
	1 3/16	-	-	-	-	-	-	ZA2103														5.40
	1 1/4	-	-	-	-	-	-	ZA2104														
	30.00	-	-	-	-	-	-	*ZA2030MM*	*160.34*	*53.94*	*22.23*	*87.31*	*22.23*	*44.45*	*120.65*	*68.26*	*13.00*	-	*50.00*	*38.89*	*14.29*	*2.50*
4	1 7/16	ZAS2107	6 9/16	2 3/16	1	3 7/8	7/8	ZA2107	6 9/16	2 1/4	1 3/16	3 11/16	13/16	1 7/8	5	2 7/8	1/2	-	2 5/16	1 3/4	11/16	7.00
	1 1/2	ZAS2108						ZA2108														6.90
	35.00	*ZAS2035MM*	*166.96*	*55.56*	*25.40*	*98.42*	*22.23*	*ZA2035MM*	*166.96*	*55.56*	*30.16*	*93.66*	*20.64*	*47.63*	*127.00*	*73.02*	*13.00*	-	*58.74*	*44.45*	*17.46*	*3.20*
5	1 11/16	ZAS2111	7 1/8	2 7/16	1	4 3/8	7/8	ZA2111	7 1/8	2 1/2	1 5/16	4 1/4	13/16	2 1/8	5 1/2	3 1/8	1/2	-	2 5/8	2 1/32	11/16	9.50
	1 3/4	ZAS2112						ZA2112														9.40
	40.00	*ZAS2040MM*	*180.98*	*63.5*	*28.58*	*111.13*	*22.23*	*ZA2040MM*	*180.98*	*63.50*	*33.34*	*107.95*	*20.64*	*53.98*	*139.70*	*79.38*	*13.00*	-	*65.88*	*51.59*	*17.46*	*4.10*
	45.00	*ZAS2045MM*						*ZAS2045MM*														*4.30*
6	1 15/16	ZAS2115	8 3/8	2 1/2	1 3/8	4 9/16	15/16	ZA2115	8 1/8	2 1/2	1 3/8	4 9/16	15/16	2 1/4	6 1/4	3 1/8	5/8	-	2 15/16	2 5/16	11/16	10.90
	2	ZAS2200						ZA2200														10.70
	50.00	*ZAS2050MM*	*212.73*	*63.50*	*34.93*	*115.89*	*25.40*	*ZA2050MM*	*206.37*	*63.50*	*34.93*	*115.89*	*25.40*	*57.15*	*158.75*	*79.38*	*16.00*	-	*73.03*	*58.74*	*17.46*	*4.90*
7	2 3/16	ZAS2203	8 7/8	2 9/16	1 5/8	5	15/16	ZA2203	8 5/8	2 9/16	1 5/8	5	15/16	2 1/2	6 3/4	3 5/16	5/8	-	3 1/4	2 5/8	25/32	13.50
	2 1/4	ZAS2204						ZA2204														13.30
	55.00	*ZAS2055MM*	*225.43*	*65.09*	*41.28*	*127.00*	*25.40*	*ZA2055MM*	*219.08*	*65.09*	*41.28*	*127.00*	*25.40*	*63.50*	*171.45*	*84.14*	*16.00*	-	*82.60*	*66.68*	*20.64*	*6.10*
8	2 3/8	ZAS2206	9 1/4	2 11/16	1 5/8	5 1/2	15/16	ZA2206	9 1/8	2 11/16	1 5/8	5 1/2	15/16	2 3/4	7 1/8	3 1/2	5/8	-	3 9/16	2 29/32	7/8	16.10
	2 7/16	ZAS2207						ZA2207														16.30
	2 1/2	ZAS2208						ZA2208														16.60
	60.00	*ZAS2060MM*	*234.95*	*68.26*	*41.28*	*139.70*	*25.40*	*ZA2060MM*	*231.78*	*68.26*	*41.28*	*139.70*	*25.40*	*69.85*	*180.98*	*88.90*	*16.00*	-	*90.50*	*73.81*	*22.23*	*7.30*
	65.00	*ZAS2065MM*						*ZAS2065MM*														*7.60*
9	2 11/16	ZAS2211	10 7/16	3 3/16	2	6 7/16	1 1/16	ZA2211	10 7/16	3 3/16	2	6 7/16	1 1/16	3 1/4	8 1/8	4	3/4	-	4 1/16	3 3/8	13/16	27.30
	2 3/4	ZAS2212						ZA2212														26.90
	2 15/16	ZAS2215						ZA2215														26.00
	3	ZAS2300						ZA2300														25.60
	70.00	*ZAS2070MM*	*265.11*	*80.96*	*50.80*	*163.51*	*28.58*	*ZA2070MM*	*265.11*	*80.96*	*50.80*	*163.51*	*28.58*	*82.55*	*206.38*	*101.60*	*19.00*	-	*103.20*	*85.73*	*22.23*	*12.20*
	75.00	*ZAS2075MM*						*ZAS2075MM*														*11.00*
10	3 3/16	ZAS2303	13	3 7/16	2 1/4	7 1/2	1 5/8	ZA2303	13	3 7/16	2 1/4	7 1/2	1 5/8	3 3/4	10	4 3/8	7/8	-	4 15/16	3 31/32	15/16	41.80
	3 7/16	ZAS2307						ZA2307														40.30
	3 1/2	ZAS2308						ZA2308														39.80

Continued...

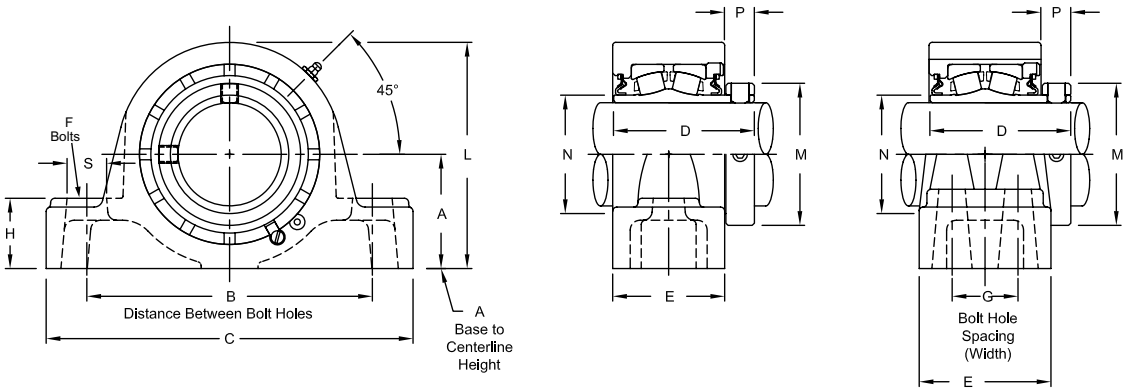

Continued...

Bearing Dimensions

Size Code	Shaft Diameter	Expansion Part Number	Expansion C	Expansion E	Expansion H	Expansion L	Expansion S	Fixed Part Number	Fixed C	Fixed E	Fixed H	Fixed L	Fixed S	A Base to Center-line Height	B Distance Between Bolt Holes	D	F Bolts	G Bolt Hole Spacing	M	N	P	Approx. Weight
Two-Bolt Pillow Block (cont.)																						
10	80.00	ZAS2080MM	330.20	87.31	57.15	190.50	41.28	ZA2080MM	330.2	87.31	57.15	190.50	41.28	95.25	254.00	111.13	22.00	-	124.62	100.81	23.81	19.00
	85.00	ZAS2085MM						ZA2085MM														18.30
	90.00	ZAS2090MM						ZAS2090MM														18.00
11	3 11/16	ZAS2311	14 1/4	4 1/8	2 1/8	8 1/2	1 3/4	ZA2311	14 1/4	4 1/8	2 1/8	8 1/2	1 3/4	4 1/8	10 7/8	5 1/16	1	-	5 5/8	4 9/16	1 1/16	58.00
	3 15/16	ZAS2315						ZA2315														56.00
	4	ZAS2400						ZA2400														55.00
	100.00	ZAS2100MM	361.95	104.78	53.98	215.90	44.45	ZA2100MM	361.95	104.78	53.98	215.90	44.45	104.78	276.23	128.59	25.00	-	142.90	115.89	26.19	25.40
Four-Bolt Pillow Block																						
6	1 15/16	ZAS2115F	8 3/8	3 3/16	1 3/8	4 9/16	13/16	ZA2115F	8 3/8	3 3/16	1 3/8	4 9/16	13/16	2 1/4	6 1/4	3 1/8	1/2	1 19/32	2 15/16	2 5/16	11/16	13.20
	2	ZAS2200F						ZA2200F														13.10
	50.00	ZAS2050MMF	212.73	80.96	34.93	115.89	22.23	ZA2050MMF	212.73	80.96	34.93	115.89	22.23	57.15	158.75	79.38	13.00	40.89	73.03	58.74	17.46	5.90
7	2 3/16	ZAS2203F	8 7/8	3 1/4	1 5/8	5	13/16	ZA2203F	8 7/8	3 1/4	1 5/8	5	13/16	2 1/2	6 3/4	3 5/16	1/2	1 11/16	3 1/4	2 5/8	25/32	15.30
	2 1/4	ZAS2204F						ZA2204F														15.10
	55.00	ZAS2055MMF	225.43	82.55	41.28	127.00	22.23	ZA2055MMF	225.43	82.55	41.28	127.00	22.23	63.50	171.45	84.14	13.00	42.86	82.60	66.68	20.64	7.00
8	2 3/8	ZAS2206F	9 1/4	3 3/8	1 3/4	5 1/2	13/16	ZA2206F	9 1/4	3 3/8	1 3/4	5 1/2	13/16	2 3/4	7 1/8	3 1/2	1/2	1 3/4	3 9/16	2 29/32	7/8	16.90
	2 7/16	ZAS2207F						ZA2207F														16.60
	2 1/2	ZAS2208F						ZA2208F														16.40
	60.00	ZAS2060MMF	234.95	85.73	44.45	139.70	22.23	ZA2060MMF	234.95	85.73	44.45	139.70	22.23	69.85	180.98	88.90	13.00	44.45	90.50	73.81	22.23	7.70
	65.00	ZAS2065MMF						ZA2065MMF														7.50
9	2 11/16	ZAS2211F	10 7/16	3 3/4	2 1/4	6 7/16	15/16	ZA2211F	10 7/16	3 3/4	2 1/4	6 7/16	15/16	3 1/4	8 1/8	4	5/8	1 7/8	4 1/16	3 3/8	13/16	28.00
	2 3/4	ZAS2212F						ZA2212F														27.80
	2 15/16	ZAS2215F						ZA2215F														26.80
	3	ZAS2300F						ZA2300F														26.50
	70.00	ZAS2070MMF	265.11	95.25	57.15	163.51	25.40	ZA2070MMF	265.11	95.25	57.15	163.51	25.40	82.55	206.38	101.60	16.00	47.63	103.20	85.73	22.23	12.60
	75.00	ZAS2075MMF						ZA2075MMF														12.20
10	3 3/16	ZAS2303F	13	4 1/8	2 1/4	7 1/2	1 1/2	ZA2303F	13	4 1/8	2 1/4	7 1/2	1 1/2	3 3/4	10	4 3/8	3/4	2	4 15/16	3 31/32	15/16	42.10
	3 7/16	ZAS2307F						ZA2307F														40.60
	3 1/2	ZAS2308F						ZA2308F														40.10
	80.00	ZAS2080MMF	330.20	104.78	57.15	190.50	38.10	ZA2080MMF	330.20	104.78	57.15	190.50	38.10	95.25	254.00	111.13	19.00	50.80	124.62	100.81	23.81	19.10
	85.00	ZAS2085MMF						ZA2085MMF														18.50
	90.00	ZAS2090MMF						ZA2090MMF														18.20
11	3 11/16	ZAS2311F	15 1/4	4 1/2	2 5/8	8 5/8	1 1/4	ZA2311F	15 1/4	4 1/2	2 5/8	8 1/2	1 1/4	4 1/4	12 1/2	5 1/16	3/4	2 1/4	5 5/8	4 9/16	1 1/16	63.00
	3 15/16	ZAS2315F						ZA2315F														61.00
	4	ZAS2400F						ZA2400F														60.00
	100.00	ZAS2100MMF	387.35	114.30	66.68	215.90	31.75	ZA2100MMF	387.35	114.30	66.68	215.90	31.75	107.95	317.50	128.59	19.00	57.15	142.90	115.89	26.19	27.70

Additional Notes

Please call 1-866-REXNORD for availability
Metric bore sizes available, see the Rex Interchangeability guide
Lubrication fitting tap size: 1/8" PT
Base to centerline tolerance, +/-.005 in *(+/-0.13 mm)*
Bore size = nominal shaft size +.001 in/-.000 in *(+0.03 mm/-0.00 mm)*
Expansion - is 3/8" for all size codes
Seals - To specify G, K or M seal, replace "Z" in part number with "G", "K" or "M"

"G" seals available in size codes 3 thru 11
Auxiliary end caps - available in all size codes except for size codes 2 & 3 and ZAS series
For the Selection Guide, Load Ratings and Speed Limits, see the Spherical Roller Bearings Engineering section on pages 15 - 27.
Note: Dimensions subject to change. Certified dimensions of ordered material furnished on request.

ZA3000, ZAS3000

Interchange: *QMPL, QMPF*

Photo Shows a 2-Bolt Spherical Roller Bearing Pillow Block Unit

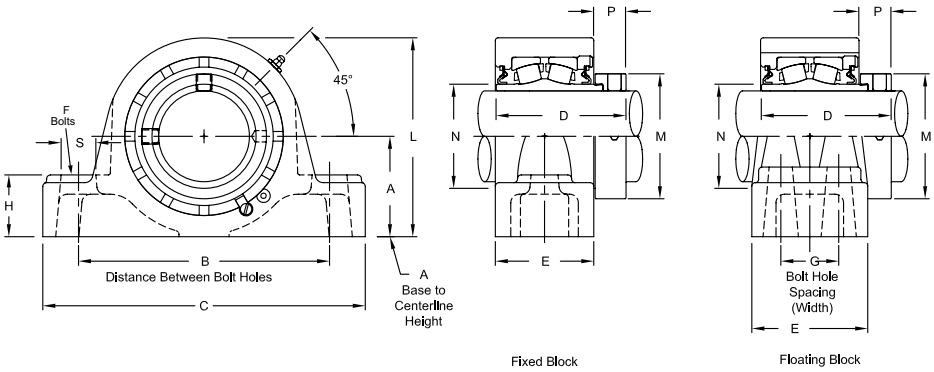

Product Features

- Corrosion-resistant powder coating
- Cast iron housing
- Misalignment capabilities - total of 4°
- Broad range of sealing options
- Factory set clearance & lubrication
- Precision ground & superfinished raceways
- Eccentric locking collar
- Field interchangeable seals
- Fixed or Expansion - total of 3/8" expansion
- See Features and Benefits for additional info on pages 10 - 13.

Bearing Dimensions

Size Code	Shaft Diameter	Expansion						Fixed						A Base to Centerline Height	B Distance Between Bolt Holes	G Bolt Hole Spacing (Width)	D	F Bolts	M	N	P	Approx. Weight
		Part Number	C	E	H	L	S	Part Number	C	E	H	L	S									
Two-Bolt Pillow Block																						
4	1 7/16	ZAS3107	6 9/16	2 3/16	1	3 7/8	7/8	ZA3107	6 9/16	2 1/4	1 3/16	3 11/16	13/16	1 7/8	5	-	2 59/64	1/2	2 5/16	1 3/4	25/32	7.20
5	1 11/16	ZAS3111	7 1/8	2 7/16	1 1/8	4 3/8	7/8	ZA3111	7 1/8	2 1/2	1 5/16	4 1/4	13/16	2 1/8	5 1/2	-	3 3/16	1/2	2 5/8	2 1/32	3/4	9.70
6	1 15/16	ZAS3115	8 3/8	2 1/2	1 3/8	4 9/16	15/16	ZA3115	8 1/8	2 1/2	1 3/8	4 9/16	15/16	2 1/4	6 1/4	-	3 9/32	5/8	2 3/4	2 5/16	27/32	11.10
7	2 3/16	ZAS3203	8 7/8	2 9/16	1 5/8	5	15/16	ZA3203	8 5/8	2 9/16	1 5/8	5	15/16	2 1/2	6 3/4	-	3 1/2	5/8	3 1/4	2 5/8	31/32	13.80
8	2 7/16	ZAS3207	9 1/4	2 11/16	1 5/8	5 1/2	15/16	ZA3207	9 1/8	2 11/16	1 5/8	5 1/2	15/16	2 3/4	7 1/8	-	3 21/32	5/8	3 9/16	2 29/32	1 1/64	16.50
	2 1/2	ZAS3208						ZA3208														
9	2 11/16	ZAS3211	10 7/16	3 3/16	2	6 7/16	1 1/16	ZA3211	10 7/16	3 3/16	2	6 7/16	1 1/16	3 1/4	8 1/8	-	4 13/64	3/4	4 1/16	3 3/8	1 1/64	27.70
	2 15/16	ZAS3215						ZA3215														26.40
10	3 7/16	ZAS3307	13	3 7/16	2 1/4	7 1/2	1 5/8	ZA3307	13	3 7/16	2 1/4	7 1/2	1 5/8	3 3/4	10	-	4 37/64	7/8	4 15/16	3 31/32	1 9/64	40.90
	3 1/2	ZAS3308						ZA3308														40.40
11	3 15/16	ZAS3315	14 1/4	4 1/8	2 1/8	8 1/2	1 3/4	ZA3315	14 1/4	4 1/8	2 1/8	8 1/2	1 3/4	4 1/8	10 7/8	-	5 3/16	1	5 5/8	4 9/16	1 1/16	56.00
Four-Bolt Pillow Block																						
6	1 15/16	ZAS3115F	8 3/8	3 3/16	1 3/8	4 9/16	13/16	ZA3115F	8 3/8	3 3/16	1 3/8	4 9/16	13/16	2 1/4	6 1/4	1 19/32	3 9/32	1/2	2 3/4	2 5/16	27/32	13.40
7	2 3/16	ZAS3203F	8 7/8	3 1/4	1 5/8	5	13/16	ZA3203F	8 7/8	3 1/4	1 5/8	5	13/16	2 1/2	6 3/4	1 11/16	3 1/2	1/2	3 1/4	2 5/8	31/32	15.60
8	2 7/16	ZAS3207F	9 1/4	3 3/8	1 3/4	5 1/2	13/16	ZA3207F	9 1/4	3 3/8	1 3/4	5 1/2	13/16	2 3/4	7 1/8	1 3/4	3 21/32	1/2	3 9/16	2 29/32	1 1/64	16.80
	2 1/2	ZAS3208F						ZA3208F														
9	2 11/16	ZAS3211F	10 7/16	3 3/4	2 1/4	6 7/16	15/16	ZA3211F	10 7/16	3 3/4	2 1/4	6 7/16	15/16	3 1/4	8 1/8	1 7/8	4 13/64	5/8	4 1/16	3 3/8	1 1/64	28.40
	2 15/16	ZAS3215F						ZA3215F														27.20
10	3 7/16	ZAS3307F	13	4 1/8	2 1/4	7 1/2	1 1/2	ZA3307F	13	4 1/8	2 1/4	7 1/2	1 1/2	3 3/4	10	2	4 37/64	3/4	4 15/16	3 31/32	1 9/64	41.20
	3 1/2	ZAS3308F						ZA3308F														40.70
11	3 15/16	ZAS3315F	15 1/4	4 1/2	2 5/8	8 5/8	1 1/4	ZA3315F	15 1/4	4 1/2	2 5/8	8 1/2	1 1/4	4 1/4	12 1/2	2 1/4	5 3/16	3/4	5 5/8	4 9/16	1 1/16	61.00

Additional Notes

- Please call 1-866-REXNORD for availability
- Lubrication fitting tap size1/8" PT
- Base to centerline tolerance, +/-.005 in *(+/-0.13 mm)*
- Bore size = nominal shaft size +.001 in/-.000 in *(+0.03 mm/-0.00 mm)*
- Expansion - is 3/8" for all size codes
- Seals - To specify G, K or M seal, replace "Z" in part number with "G", "K" or "M"
- Auxiliary end caps - available in all size codes except ZAS series

For the Selection Guide, Load Ratings and Speed Limits, see the Spherical Roller Bearings Engineering section on pages 15 - 27.

Note: Dimensions subject to change. Certified dimensions of ordered material furnished on request.

ZA5000, ZAS5000

Interchange: *QAAPL, QAAPF*

Photo Shows a 2-Bolt Spherical Roller Bearing Pillow Block Unit

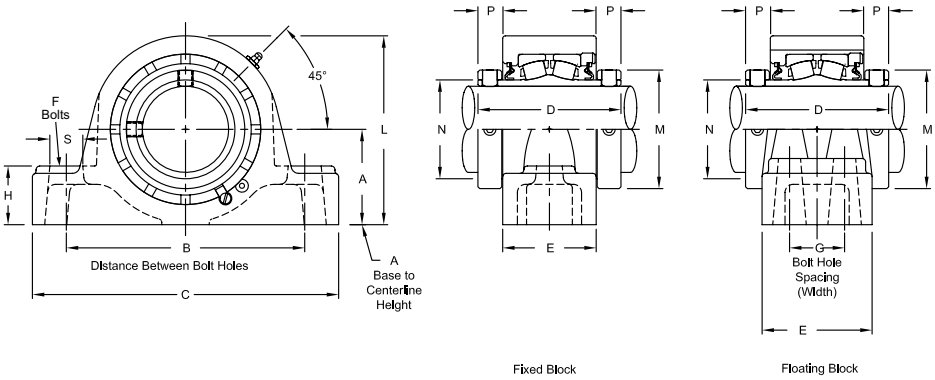

Product Features

- Corrosion-resistant powder coating
- Cast iron housing
- Misalignment capabilities - total of 4°
- Broad range of sealing options
- Factory set clearance & lubrication
- Precision ground & superfinished raceways
- Two hardened spring locking collars
- Field interchangeable seals
- Fixed or Expansion - total of 3/8" expansion
- See Features and Benefits for additional info on pages 10 - 13.

Bearing Dimensions

Size Code	Shaft Diameter	Expansion						Fixed						A Base to Center-line Height	B Distance Between Bolt Holes	D	F	G Bolt Hole Spacing (Width)	M	N	P	Approx. Weight
		Part Number	C	E	H	L	S	Part Number	C	E	H	L	S									
Two-Bolt Pillow Block																						
4	1 7/16	ZAS5107	6 9/16	2 1/4	1 3/16	3 7/8	7/8	ZA5107	6 9/16	2 3/16	1	3 7/8	7/8	1 7/8	5	3 9/16	1/2	-	2 5/16	1 3/4	11/16	7.50
	35.00	*ZAS5035MM*	*166.96*	*55.56*	*25.40*	*98.42*	*22.23*	*ZA5035MM*	*166.96*	*55.56*	*30.16*	*93.66*	*20.64*	*47.63*	*127.00*	*90.49*	*13.00*	*-*	*58.74*	*44.45*	*17.46*	*3.40*
5	1 1/2	ZAS5108	7 1/8	2 1/2	1 5/16	4 3/8	7/8	ZA5108	7 1/8	2 7/16	1 1/8	4 3/8	7/8	2 1/8	5 1/2	3 13/16	1/2	-	2 19/32	2 1/32	11/16	10.50
	1 11/16	ZAS5111						ZA5111														10.10
	40.00	*ZAS5040MM*	*180.98*	*63.5*	*28.58*	*111.13*	*22.23*	*ZA5040MM*	*180.98*	*63.50*	*33.34*	*107.95*	*20.64*	*53.98*	*139.70*	*96.84*	*13.00*	*-*	*65.88*	*51.59*	*17.46*	*4.70*
	45.00	*ZAS5045MM*						*ZA5045MM*														*4.60*
6	1 15/16	ZAS5115	8 3/8	2 1/2	1 3/8	4 9/16	1	ZA5115	8 3/8	2 1/2	1 3/8	4 9/16	1	2 1/4	6 1/4	3 13/16	5/8	-	2 7/8	2 5/16	11/16	11.50
	50.00	*ZAS5050MM*	*212.73*	*63.50*	*34.93*	*115.89*	*25.40*	*ZA5050MM*	*206.37*	*63.50*	*34.93*	*115.89*	*25.40*	*57.15*	*158.75*	*96.84*	*16.00*	*-*	*73.03*	*66.68*	*25.40*	*5.20*
7	2	ZAS5200	8 5/8	2 9/16	1 5/8	5	1	ZA5200	8 5/8	2 9/16	1 5/8	5	1	2 1/2	6 3/4	4 1/8	5/8	-	3 1/4	2 5/8	13/16	15.20
	2 3/16	ZAS5203						ZA5203														15.80
	55.00	*ZAS5055MM*	*225.43*	*65.09*	*41.28*	*127.00*	*25.40*	*ZA5055MM*	*219.08*	*65.09*	*41.28*	*127.00*	*25.40*	*63.50*	*171.45*	*104.78*	*16.00*		*82.60*	*66.68*	*20.64*	*7.20*
8	2 7/16	ZAS5207	9 1/8	2 11/16	1 5/8	5 1/2	1	ZA5207	9 1/8	2 11/16	1 5/8	5 1/2	1	2 3/4	7 1/8	4 3/8	5/8	-	3 9/16	2 29/32	7/8	17.10
	60.00	*ZAS5060MM*	*234.95*	*68.26*	*41.28*	*139.70*	*25.40*	*ZA5060MM*	*231.78*	*68.26*	*41.28*	*139.70*	*25.40*	*69.85*	*180.98*	*111.13*	*16.00*	*-*	*90.50*	*73.81*	*22.23*	*7.80*
	65.00	*ZAS5065MM*						*ZA5065MM*														*7.50*
9	2 1/2	ZAS5208	10 7/16	3 3/16	2	6 7/16	1 1/8	ZA5208	10 7/16	3 3/16	2	6 7/16	1 1/8	3 1/4	8 1/8	4 7/8	3/4	-	4 1/16	3 3/8	7/8	30.00
	2 11/16	ZAS5211						ZA5211														29.00
	2 15/16	ZAS5215						ZA5215														28.50
	70.00	*ZAS5070MM*	*265.11*	*80.96*	*50.80*	*163.51*	*28.58*	*ZA5070MM*	*265.11*	*80.96*	*50.80*	*163.51*	*28.58*	*82.55*	*206.38*	*134.94*	*19.00*	*-*	*103.20*	*85.73*	*22.23*	*13.10*
	75.00	*ZAS5075MM*						*ZA5075MM*														*12.90*
10	3 3/16	ZAS5303	13	3 7/16	2 1/4	7 1/2	1 5/8	ZA5303	13	3 7/16	2 1/4	7 1/2	1 5/8	3 3/4	10	5 5/16	7/8	-	4 29/32	3 31/32	15/16	44.40
	3 7/16	ZAS5307						ZA5307														42.50
	80.00	*ZAS5080MM*	*330.20*	*87.31*	*57.15*	*190.50*	*41.28*	*ZA5080MM*	*330.2*	*87.31*	*57.15*	*190.50*	*41.28*	*95.25*	*254.00*	*134.94*	*22.00*	*-*	*124.62*	*100.81*	*23.81*	*20.10*
	85.00	*ZAS5085MM*						*ZA5085MM*														*19.90*
	90.00	*ZAS5090MM*						*ZA5090MM*														*19.70*
11	3 11/16	ZAS5311	14 1/4	4 1/8	2 1/8	8 1/2	1 3/4	ZA5311	14 1/4	4 1/8	2 1/8	8 1/2	1 3/4	4 1/8	10 7/8	6 1/8	1	-	5 5/8	4 9/16	1 1/32	60.50
	3 15/16	ZAS5315						ZA5315														59.50
	4	ZAS5400						ZA5400														58.50
	100.00	*ZAS5100MM*	*361.95*	*104.78*	*53.98*	*215.90*	*44.45*	*ZA5100MM*	*361.95*	*104.78*	*53.98*	*215.90*	*44.45*	*104.78*	*276.23*	*155.58*	*25.00*	*-*	*142.90*	*115.89*	*26.19*	*26.50*

Continued...

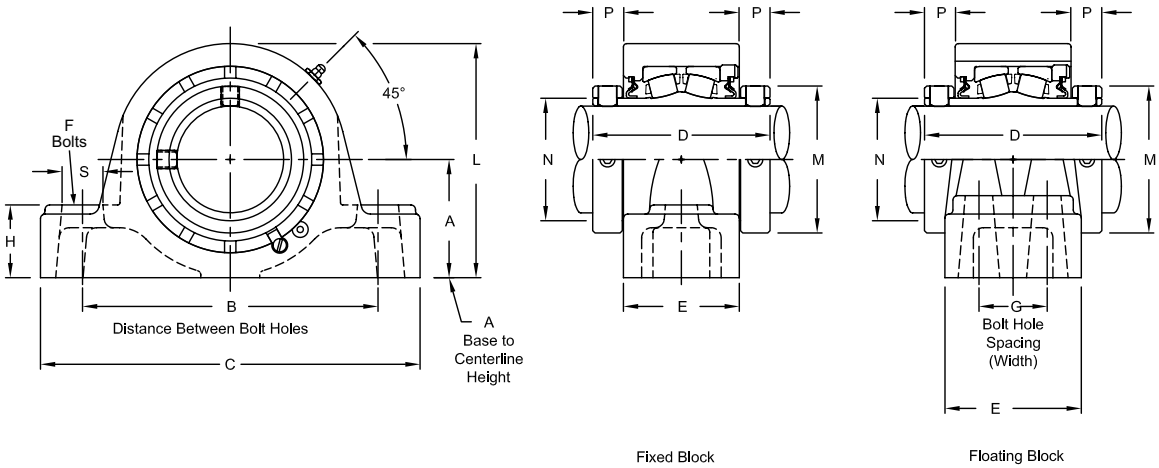

Continued...

Bearing Dimensions

Size Code	Shaft Diameter	Expansion Part Number	Expansion C	Expansion E	Expansion H	Expansion L	Expansion S	Fixed Part Number	Fixed C	Fixed E	Fixed H	Fixed L	Fixed S	A Base to Center-line Height	B Distance Between Bolt Holes	D	F Bolts	G Bolt Hole Spacing (Width)	M	N	P	Approx. Weight
Four-Bolt Pillow Block																						
6	1 15/16	ZAS5115F	8 3/8	3 3/16	1 3/8	4 9/16	7/8	ZA5115F	8 3/8	3 3/16	1 3/8	4 9/16	7/8	2 1/4	6 1/4	3 13/16	1/2	1 19/32	2 7/8	2 5/16	11/16	13.80
	45.00	*ZAS5050MMF*	*212.73*	*80.96*	*34.93*	*115.89*	*22.23*	*ZA5050MMF*	*212.73*	*80.96*	*34.93*	*115.89*	*22.23*	*57.15*	*158.75*	*96.84*	*13.00*	*40.89*	*73.03*	*58.74*	*22.23*	*6.30*
7	2	ZAS5200F	8 7/8	3 1/4	1 5/8	5	7/8	ZA5200F	8 7/8	3 1/4	1 5/8	5	7/8	2 1/2	6 3/4	4 1/8	1/2	1 11/16	3 1/4	2 5/8	13/16	17.00
	2 3/16	ZAS5203F						ZA5203F														17.60
	55.00	*ZAS5055MMF*	*225.43*	*82.55*	*41.28*	*127.00*	*22.23*	*ZA5055MMF*	*225.43*	*82.55*	*41.28*	*127.00*	*22.23*	*63.50*	*171.45*	*104.78*	*13.00*	*42.86*	*82.60*	*66.68*	*22.23*	*8.00*
8	2 7/16	ZAS5207F	9 1/4	3 3/8	1 3/4	5 1/2	7/8	ZA5207F	9 1/4	3 3/8	1 3/4	5 1/2	7/8	2 3/4	7 1/8	4 3/8	1/2	1 3/4	3 9/16	2 29/32	7/8	17.90
	60.00	*ZAS5060MMF*	*234.95*	*85.73*	*44.45*	*139.70*	*22.23*	*ZA5060MMF*	*234.95*	*85.73*	*44.45*	*139.70*	*22.23*	*69.85*	*180.98*	*111.13*	*13.00*	*44.45*	*90.50*	*73.81*	*22.23*	*8.10*
	65.00	*ZAS5065MMF*						*ZA5065MMF*														*7.80*
9	2 1/2	ZAS5208F	10 7/16	3 3/4	2 1/4	6 7/16	1	ZA5208F	10 7/16	3 3/4	2 1/4	6 7/16	1	3 1/4	8 1/8	4 7/8	5/8	1 7/8	4 1/16	3 3/8	7/8	30.70
	2 11/16	ZAS5211F						ZA5211F														29.70
	2 15/16	ZAS5215F						ZA5215F														29.20
	70.00	*ZAS5070MMF*	*265.11*	*95.25*	*57.15*	*163.51*	*25.40*	*ZA5070MMF*	*265.11*	*95.25*	*57.15*	*163.51*	*25.40*	*82.55*	*206.38*	*123.83*	*16.00*	*47.63*	*103.20*	*85.73*	*22.23*	*13.50*
	75.00	*ZAS5075MMF*						*ZA5075MMF*														*13.20*
10	3 3/16	ZAS5303F	13	4 1/8	2 1/4	7 1/2	1 1/2	ZA5303F	13	4 1/8	2 1/4	7 1/2	1 1/2	3 3/4	10	5 5/16	3/4	2	4 29/32	3 31/32	15/16	44.70
	3 7/16	ZAS5307F						ZA5307F														42.80
	80.00	*ZAS5080MMF*	*330.20*	*104.78*	*57.15*	*190.50*	*38.10*	*ZA5080MMF*	*330.2*	*104.78*	*57.15*	*190.50*	*38.10*	*95.25*	*254.00*	*134.94*	*19.00*	*50.80*	*124.62*	*100.81*	*23.81*	*20.30*
	85.00	*ZAS5085MMF*						*ZA5085MMF*														*20.10*
	90.00	*ZAS5090MMF*						*ZA5090MMF*														*19.90*
11	3 11/16	ZAS5311F	15 1/4	4 1/2	2 5/8	8 1/2	1 1/4	ZA5311F	15 1/4	4 1/2	2 5/8	8 1/2	1 1/4	4 1/4	12 1/2	6 1/8	3/4	2 1/4	5 5/8	4 9/16	1 1/32	65.50
	3 15/16	ZAS5315F						ZA5315F														64.50
	4	ZAS5400F						ZA5400F														63.50
	100.00	*ZAS5100MMF*	*387.35*	*114.30*	*66.68*	*215.90*	*31.75*	*ZA5100MMF*	*387.35*	*114.30*	*66.68*	*215.90*	*31.75*	*107.95*	*317.50*	*155.58*	*19.00*	*57.15*	*142.90*	*115.89*	*26.19*	*28.80*

Additional Notes

Please call 1-866-REXNORD for availability
Metric bore sizes available, see the Rex Interchangeability guide
Lubrication fitting tap size 1/8" PT
Base to centerline tolerance, +/-.005 in *(+/-0.13 mm)*
Bore size = nominal shaft size +.001 in/-.000 in *(+0.03 mm/-0.00 mm)*
Expansion - is 3/8" for all size codes
Seals - To specify G, K or M seal, replace "Z" in part number with "G", "K" or "M"

Auxiliary end caps - available in all size codes except ZAS series
For the Selection Guide, Load Ratings and Speed Limits, see the Spherical Roller Bearings Engineering section on pages 15 - 27.
Note: Dimensions subject to change. Certified dimensions of ordered material furnished on request.

ZA6000, ZAS6000

Interchange: *P2BIP, P4BIP, (F)SYR-N, USRB5000A, USRBF5000A, QVVPL, QVVPF, DVPF*

Photo Shows a 2-Bolt Spherical Roller Bearing Pillow Block Unit

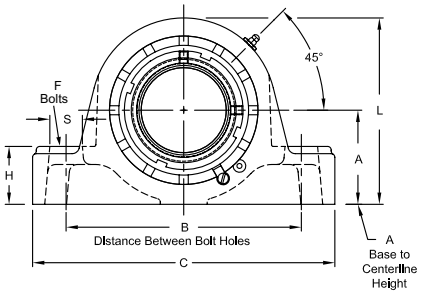

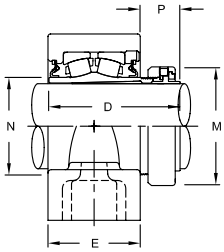

Fixed Block

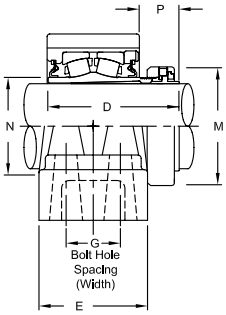

Floating Block

Product Features

- Spyglass Optical Strain Sensor (OSS) Technology
- Positive locking system
- Tapered adapter sleeve
- Corrosion-resistant powder coating
- Cast iron housing
- Misalignment capabilities - total of 4°
- Broad range of sealing options
- Factory set clearance & lubrication
- Precision ground & superfinished raceways
- See Features and Benefits for additional info on pages 10 - 13.

Bearing Dimensions

Size Code	Shaft Diameter	Expansion Part Number	Expansion C	Expansion E	Expansion H	Expansion L	Expansion S	Fixed Part Number	Fixed C	Fixed E	Fixed H	Fixed L	Fixed S	A Base to Center-line Height	B Distance Between Bolt Holes	G Bolt Hole Spacing (Width)	D	F Bolts	M	N	P	Approx. Weight
Two-Bolt Pillow Block																						
4	1 7/16	ZAS6107	6 9/16	2 3/16	1	3 7/8	7/8	ZA6107	6 9/16	2 1/4	1 3/16	3 11/16	13/16	1 7/8	5	-	3 21/64	1/2	2 25/64	1 3/4	1 9/64	6.10 lb
5	1 11/16	ZAS6111	7 1/8	2 3/16	1 1/8	4 3/8	7/8	ZA6111	7 1/8	2 1/2	1 5/16	4 1/4	13/16	2 1/8	5 1/2	-	3 47/64	1/2	2 41/64	2 1/32	1 9/32	9.50 lb
6	1 15/16	ZAS6115	8 3/8	2 1/2	1 3/8	4 9/16	1	ZA6115	8 1/8	2 1/2	1 3/8	4 9/16	15/16	2 1/4	6 1/4	-	3 41/64	5/8	2 55/64	2 5/16	1 1/8	10.90 lb
	45.00	*ZAS6045MM*	*212.73*	*63.50*	*34.93*	*115.89*	*25.40*	*ZA6045MM*	*212.73*	*63.50*	*34.93*	*115.89*	*25.40*	*57.15*	*158.75*	*-*	*92.47*	*16.00*	*72.63*	*58.74*	*28.58*	*5.20 kg*
7	2 3/16	ZAS6203	8 5/8	2 9/16	1 5/8	5	1	ZA6203	8 5/8	2 9/16	1 5/8	5	1	2 1/2	6 3/4	-	3 11/16	5/8	3 15/64	2 5/8	1 5/32	12.90 lb
	55.00	*ZAS6055MM*	*225.43*	*65.09*	*41.28*	*127.00*	*25.40*	*ZA6055MM*	*225.43*	*65.09*	*41.28*	*127.00*	*25.40*	*63.50*	*171.45*	*-*	*93.66*	*16.00*	*82.15*	*66.68*	*29.37*	*7.20 kg*
8	2 3/8	ZAS6206	9 1/8	2 11/16	1 5/8	5 1/2	1	ZA6206	9 1/8	2 11/16	1 5/8	5 1/2	1	2 3/4	7 1/8	-	4 1/16	5/8	3 19/32	2 29/32	1 27/64	16.10 lb
	2 7/16	ZAS6207						ZA6207														16.30 lb
	60.00	*ZAS6060MM*	*231.78*	*68.26*	*41.28*	*139.70*	*25.40*	*ZA6060MM*	*231.78*	*68.26*	*41.28*	*139.70*	*25.40*	*69.85*	*180.98*	*-*	*103.19*	*16.00*	*91.28*	*73.81*	*36.12*	*7.80 kg*
9	2 11/16	ZAS6211	10 7/16	3 3/16	2	6 7/16	1 1/8	ZA6211	10 7/16	3 3/16	2	6 7/16	1 1/8	3 1/4	8 1/8	-	4 17/32	3/4	4 3/32	3 3/8	1 25/64	27.30 lb
	2 3/4	ZAS6212						ZA6212														26.90 lb
	2 15/16	ZAS6215						ZA6215														26.00 lb
	70.00	*ZAS6070MM*	*265.11*	*80.96*	*50.80*	*163.51*	*28.58*	*ZA6070MM*	*265.11*	*80.96*	*50.80*	*163.51*	*28.58*	*82.55*	*206.38*	*-*	*115.09*	*19.00*	*103.98*	*85.73*	*35.32*	*13.10 kg*
	75.00	*ZAS6075MM*						*ZA6075MM*														*12.90 kg*
10	3 3/16	ZAS6303	13	3 7/16	2 1/4	7 1/2	1 5/8	ZA6303	13	3 7/16	2 1/4	7 1/2	1 5/8	3 3/4	10	-	5 1/32	7/8	4 61/64	3 31/32	1 19/32	41.80 lb
	3 7/16	ZAS6307						ZA6307														40.30 lb
	80.00	*ZAS6080MM*	*330.20*	*87.31*	*57.15*	*190.50*	*41.28*	*ZA6080MM*	*330.2*	*87.31*	*57.15*	*190.50*	*41.28*	*95.25*	*254.00*	*-*	*127.79*	*22.00*	*125.81*	*100.81*	*40.48*	*20.10 kg*
	85.00	*ZAS6085MM*						*ZA6085MM*														*19.90 kg*
11	3 11/16	ZAS6311	14 1/4	4 1/8	2 1/8	8 1/2	1 3/4	ZA6311	14 1/4	4 1/8	2 1/8	8 1/2	1 3/4	4 1/8	10 7/8	-	5 31/32	1	5 43/64	4 9/16	1 47/64	58.00 lb
	3 15/16	ZAS6315						ZA6315														56.00 lb
	90.00	*ZAS6090MM*	*361.95*	*104.78*	*53.98*	*215.90*	*44.45*	*ZA6090MM*	*361.95*	*104.78*	*53.98*	*215.90*	*44.45*	*104.78*	*276.23*	*-*	*146.84*	*25.00*	*144.07*	*115.89*	*44.05*	*26.50 kg*
	100.00	*ZAS6100MM*						*ZA6100MM*														
Four-Bolt Pillow Block																						
6	1 15/16	ZAS6115F	8 3/8	3 3/16	1 3/8	4 9/16	7/8	ZA6115F	8 3/8	3 3/16	1 3/8	4 9/16	7/8	2 1/4	6 1/4	1 19/32	3 41/64	1/2	2 55/64	2 5/16	1 1/8	11.70 lb
	45.00	*ZAS6045MMF*	*212.73*	*80.96*	*34.93*	*115.89*	*22.23*	*ZA6045MMF*	*212.73*	*80.96*	*34.93*	*115.89*	*22.23*	*57.15*	*158.75*	*40.89*	*92.47*	*13.00*	*72.63*	*58.74*	*28.58*	*6.30 kg*
7	2 3/16	ZAS6203F	8 7/8	3 1/4	1 5/8	5	7/8	ZA6203F	8 7/8	3 1/4	1 5/8	5	7/8	2 1/2	6 3/4	1 11/16	3 11/16	1/2	3 15/64	2 5/8	1 5/32	15.30 lb
	55.00	*ZAS6055MMF*	*225.43*	*82.55*	*41.28*	*127.00*	*22.23*	*ZA6055MMF*	*225.43*	*82.55*	*41.28*	*127.00*	*22.23*	*63.50*	*171.45*	*42.86*	*93.66*	*13.00*	*82.15*	*66.68*	*29.37*	*8.00 kg*
8	2 3/8	ZAS6206F	9 1/4	3 3/8	1 3/4	5 1/2	7/8	ZA6206F	9 1/4	3 3/8	1 3/4	5 1/2	7/8	2 3/4	7 1/8	1 3/4	4 1/16	1/2	3 19/32	2 29/32	1 27/64	16.90 lb
	2 7/16	ZAS6207F						ZA6207F														16.60 lb
	60.00	*ZAS6060MMF*	*234.95*	*85.73*	*44.45*	*139.70*	*22.23*	*ZA6060MMF*	*234.95*	*85.73*	*44.45*	*139.70*	*22.23*	*69.85*	*180.98*	*44.45*	*103.19*	*13.00*	*91.28*	*73.81*	*36.12*	*8.10 kg*
9	2 11/16	ZAS6211F	10 7/16	3 3/4	2 1/4	6 7/16	1	ZA6211F	10 7/16	3 3/4	2 1/4	6 7/16	1	3 1/4	8 1/8	1 7/8	4 17/32	5/8	4 3/32	3 3/8	1 25/64	28.00 lb
	2 3/4	ZAS6212F						ZA6212F														26.80 lb
	2 15/16	ZAS6215F						ZA6215F														
	70.00	*ZAS6070MMF*	*165.11*	*95.25*	*57.15*	*163.51*	*25.40*	*ZA6070MMF*	*165.11*	*95.25*	*57.15*	*163.51*	*25.40*	*82.55*	*206.38*	*47.63*	*115.09*	*16.00*	*103.98*	*85.73*	*35.32*	*13.50 kg*
	75.00	*ZAS6075MMF*						*ZA6075MMF*														*13.20 kg*

Continued...

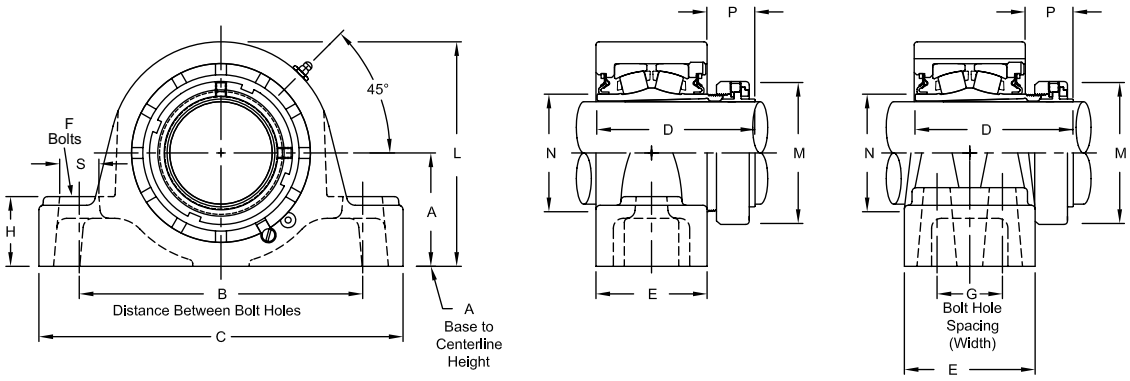

Fixed Block

Floating Block

Continued...

Bearing Dimensions

Size Code	Shaft Diameter	Expansion Part Number	Expansion C	Expansion E	Expansion H	Expansion L	Expansion S	Fixed Part Number	Fixed C	Fixed E	Fixed H	Fixed L	Fixed S	A Base to Center-line Height	B Distance Between Bolt Holes	G Bolt Hole Spacing (Width)	D	F Bolts	M	N	P	Approx. Weight
Four-Bolt Pillow Block																						
10	3 3/16	ZAS6303F	13	4 1/8	2 1/4	7 1/2	1 1/2	ZA6303F	13	4 1/8	2 1/4	7 1/2	1 1/2	3 3/4	10	2	5 1/32	3/4	4 61/64	3 31/32	1 19/32	42.10 lb
	3 7/16	ZAS6307F						ZA6307F														40.60 lb
	80.00	*ZAS6080MMF*	*330.20*	*104.78*	*57.15*	*190.50*	*38.10*	*ZA6080MMF*	*330.20*	*104.78*	*57.15*	*190.50*	*38.10*	*95.25*	*254.00*	*50.80*	*127.79*	*19.00*	*125.81*	*100.81*	*40.48*	*20.30 kg*
	85.00	*ZAS6085MMF*						*ZA6085MMF*														*20.10 kg*
11	3 11/16	ZAS6311F	15 1/4	4 1/2	2 5/8	8 1/2	1 1/4	ZA6311F	15 1/4	4 1/2	2 5/8	8 1/2	1 1/4	4 1/4	12 1/2	2 1/4	5 31/32	3/4	5 43/64	4 9/16	1 47/64	63.00 lb
	3 15/16	ZAS6315F						ZA6315F														61.00 lb
	90.00	*ZAS6090MMF*	*387.35*	*114.30*	*66.68*	*215.90*	*31.75*	*ZA6090MMF*	*387.35*	*114.30*	*66.68*	*215.90*	*31.75*	*107.95*	*317.50*	*57.15*	*146.84*	*19.00*	*144.07*	*115.89*	*44.05*	*28.80 kg*
	100.00	*ZAS6100MMF*						*ZA6100MMF*														

Additional Notes

Please call 1-866-REXNORD for availability
Metric bore sizes available, see the Rex Interchangeability guide
Lubrication fitting tap size: for fixed units 1/8" PT
Base to centerline tolerance, +/-.005 in *(+/-0.13 mm)*
Expansion - is 3/8" for all size codes
Seals - To specify G, K or M seal, replace “Z” in part number with “G”, “K” or “M”
Auxiliary end caps - available in all size codes except ZAS series

For the Selection Guide, Load Ratings and Speed Limits, see the Spherical Roller Bearings Engineering section on pages 15 - 27.

Note: Dimensions subject to change. Certified dimensions of ordered material furnished on request.

ZA9000, ZAS9000

Photo Shows a 2-Bolt Spherical Roller Bearing Pillow Block Unit

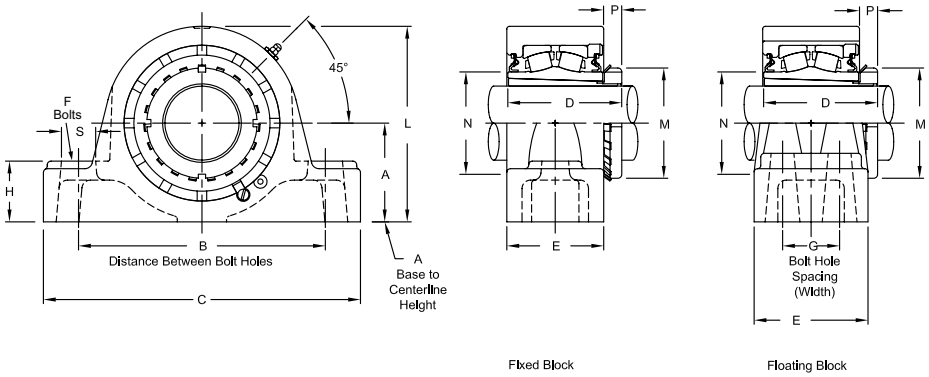

Product Features

- Corrosion-resistant powder coating
- Cast iron housing
- Misalignment capabilities - total of 4°
- Broad range of sealing options
- Factory set clearance & lubrication
- Precision ground & superfinished raceways
- Enhanced life mounting style
- Field interchangeable seals
- Fixed or Expansion - total of 3/8" expansion
- See Features and Benefits for additional info on pages 10 - 13.

Bearing Dimensions

Size Code	Shaft Diameter	Expansion Part Number	Fixed Part Number	A Base to Centerline Height	B Distance Between Bolt Holes	G Bolt Hole Spacing (Width)	C	D	E	F Bolts	H	L	M	N	P	S	Approx. Weight
Two-Bolt Pillow Block																	
7	1 15/16	ZAS9115	ZA9115	2 1/2	6 3/4	-	8 5/8	3 5/32	2 9/16	5/8	1 5/8	5	2 31/32	2 5/8	19/32	1	13.70
	2	ZAS9200	ZA9200														13.60
	45.00	*ZAS9045MM*	*ZA9045MM*	*63.50*	*171.45*	*-*	*225.43*	*80.17*	*65.09*	*16.00*	*41.28*	*127.00*	*75.40*	*66.680*	*15.08*	*25.40*	*6.10*
	50.00	*ZAS9050MM*	*ZA9050MM*														
8	2 3/16	ZAS9203	ZA9203	2 3/4	7 1/8	-	9 1/8	3 11/32	2 11/16	5/8	1 5/8	5 1/2	3 3/8	2 29/32	23/32	1	16.40
	55.00	*ZAS9055MM*	*ZA9055MM*	*69.85*	*180.98*	*-*	*231.78*	*84.93*	*68.26*	*16.00*	*41.28*	*139.70*	*85.73*	*73.810*	*18.26*	*25.40*	*25.40*
9	2 7/16	ZAS9207	ZA9207	3 1/4	8 1/8	-	10 7/16	3 3/4	3 3/16	3/4	2	6 7/16	3 5/8	3 3/8	5/8	1 1/8	26.60
	2 1/2	ZAS9208	ZAS9208														26.60
10	2 11/16	ZAS9211	ZA9211	3 3/4	10	-	13	4 1/4	3 7/16	7/8	2 1/4	7 1/2	4 13/32	3 31/32	13/16	1 5/8	43.00
	2 15/16	ZAS9215	ZA9215														41.80
	75.00	*ZAS9075MM*	*ZA9075MM*	*95.25*	*254.00*	*-*	*330.20*	*107.95*	*87.31*	*22.00*	*57.15*	*190.50*	*111.92*	*100.810*	*20.64*	*41.28*	*19.00*
11	3 3/16	ZAS9303	ZA9303	4 1/8	10 7/8	-	14 1/4	5	4 1/8	1	2 1/8	8 1/2	5 3/16	5 3/16	15/16	15/16	61.00
	3 7/16	ZAS9307	ZA9307														59.00
	80.00	*ZAS9080MM*	*ZA9080MM*	*104.78*	*276.23*	*-*	*361.95*	*127.00*	*104.78*	*25.00*	*53.98*	*215.90*	*131.76*	*115.890*	*23.81*	*44.45*	*27.00*
Four-Bolt Pillow Block																	
7	1 15/16	ZAS9115F	ZA9115F	2 1/2	6 3/4	1 11/16	8 7/8	3 5/32	3 1/4	1/2	1 5/8	5	2 31/32	2 5/8	19/32	7/8	15.50
	2	ZAS9200F	ZA9200F														15.40
	45.00	*ZAS9045MMF*	*ZA9045MMF*	*63.50*	*171.45*	*42.86*	*225.43*	*80.17*	*82.55*	*13.00*	*41.28*	*127.00*	*75.41*	*66.680*	*15.08*	*22.23*	*7.00*
	50.00	*ZAS9050MMF*	*ZA9050MMF*														
8	2 3/16	ZAS9203F	ZA9203F	2 3/4	7 1/8	1 3/4	9 1/4	3 11/32	3 3/8	1/2	1 3/4	5 1/2	3 3/8	2 29/32	23/32	7/8	17.20
	55.00	*ZAS9055MMF*	*ZA9055MMF*	*69.85*	*180.98*	*44.45*	*234.95*	*84.93*	*85.73*	*13.00*	*44.45*	*139.70*	*85.73*	*73.810*	*18.26*	*22.23*	*7.80*
9	2 7/16	ZAS9207F	ZA9207F	3 1/4	8 1/8	1 7/8	10 7/16	3 3/4	3 3/4	5/8	2 1/4	6 7/16	3 5/8	3 3/8	5/8	1	27.30
	2 1/2	ZAS9208F	ZA9208F														29.30
10	2 11/16	ZAS9211F	ZA9211F	3 3/4	10	2	13	4 1/4	4 1/4	3/4	2 1/4	7 1/2	4 13/32	3 31/32	13/16	1 1/2	43.30
	2 15/16	ZAS9215F	ZA9215F														42.10
	75.00	*ZAS9075MMF*	*ZA9075MMF*	*95.25*	*254.00*	*50.80*	*330.20*	*107.95*	*104.78*	*19.00*	*57.15*	*190.50*	*111.92*	*100.810*	*20.64*	*38.10*	*19.20*
11	3 3/16	ZAS9303F	ZA9303F	4 1/4	12 1/2	2 1/4	15 1/4	5	4 1/2	3/4	2 5/8	8 1/2	5 3/16	4 9/16	15/16	1 1/4	66.00
	3 7/16	ZAS9307F	ZA9307F														64.00
	80.00	*ZAS9080MMF*	*ZA9080MMF*	*107.95*	*317.50*	*57.15*	*387.35*	*127.00*	*114.30*	*19.00*	*66.68*	*215.90*	*131.76*	*115.890*	*23.81*	*31.75*	*29.00*

Additional Notes

- Please call 1-866-REXNORD for availability
- Lubrication fitting tap size 1/8" PT
- Base to centerline tolerance, +/-.005 in *(+/-0.13 mm)*
- Expansion - is 3/8" for all size codes
- Seals - To specify G, K or M seal, replace "Z" in part number with "G", "K" or "M"
- Auxiliary end caps - available in all size codes except ZAS series

For the Selection Guide, Load Ratings and Speed Limits, see the Spherical Roller Bearings Engineering section on pages 15 - 27.

Note: Dimensions subject to change. Certified dimensions of ordered material furnished on request.

ZA2000-72, ZAS2000-72

Photo Shows a 2-Bolt Spherical Roller Bearing Pillow Block Unit

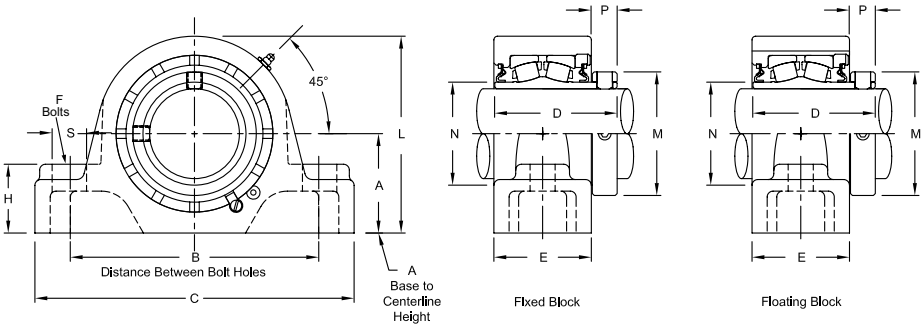

Product Features

- Corrosion-resistant powder coating
- Cast steel housing
- Misalignment capabilities - total of 4°
- Broad range of sealing options
- Factory set clearance & lubrication
- Precision ground & superfinished raceways
- Hardened spring locking collar
- Field interchangeable seals
- Fixed or Expansion - total of 3/8" expansion
- See Features and Benefits for additional info on pages 10 - 13.

Bearing Dimensions

Size Code	Shaft Diameter	Expansion Part Number	Expansion C	Expansion H	Expansion L	Expansion S	Fixed Part Number	Fixed C	Fixed H	Fixed L	Fixed S	A Base to Centerline Height	B Distance Between Bolt Holes	D	E	F Bolts	M	N	P	Approx. Weight
Two-Bolt Pillow Block																				
4	1 7/16	ZAS210772	6 9/16	1	3 7/8	7/8	ZA210772	6 9/16	1	3 5/8	7/8	1 7/8	5	2 7/8	2 1/4	1/2	2 5/16	1 3/4	11/16	7.50
	1 1/2	ZAS210872					ZA210872													
	35.00	*ZAS2035MM72*	*166.69*	*25.40*	*98.43*	*22.23*	*ZA2035MM72*	*166.69*	*25.40*	*92.08*	*22.23*	*47.63*	*127.00*	*73.02*	*57.15*	*13.00*	*58.74*	*44.450*	*17.46*	*3.40*
5	1 11/16	ZAS211172	7 1/8	1 1/8	4 3/8	7/8	ZA211172	7 1/8	1 1/8	4 3/16	7/8	2 1/8	5 1/2	3 1/8	2 1/2	1/2	2 19/32	2 1/32	11/16	10.50
	1 3/4	ZAS211272					ZA211272													
	40.00	*ZAS2040MM72*	*180.98*	*28.58*	*111.13*	*22.23*	*ZA2040MM72*	*180.98*	*28.58*	*106.36*	*22.23*	*53.98*	*139.70*	*79.38*	*63.50*	*13.00*	*65.88*	*51.590*	*17.46*	*4.70*
	45.00	*ZAS2045MM72*					*ZA2045MM72*													
6	1 15/16	ZAS211572	8 1/8	1 1/4	4 9/16	15/16	ZA211572	8 3/8	1 3/8	4 9/16	1	2 1/4	6 1/4	3 1/8	2 1/2	5/8	2 7/8	2 5/16	11/16	11.70
	2	ZAS220072					ZA220072													
	50.00	*ZAS2050MM72*	*206.38*	*31.75*	*115.89*	*23.81*	*ZA2050MM72*	*212.73*	*34.93*	*115.89*	*25.40*	*57.15*	*158.75*	*79.38*	*63.50*	*16.00*	*73.03*	*58.740*	*17.46*	*5.30*
7	2 3/16	ZAS220372	8 5/8	1 5/16	5	1	ZA220372	8 7/8	1 5/8	5	1	2 1/2	6 3/4	3 5/16	2 9/16	5/8	3 1/4	2 5/8	13/16	14.50
	2 1/4	ZAS220472					ZA220472													
	55.00	*ZAS2055MM72*	*219.08*	*33.34*	*127.00*	*25.40*	*ZA2055MM72*	*225.43*	*41.28*	*127.00*	*25.40*	*63.50*	*171.45*	*84.14*	*65.09*	*16.00*	*82.60*	*66.680*	*20.64*	*6.60*
8	2 3/8	ZAS220672	9 1/8	1 1/2	5 1/2	1	ZA220672	9 1/4	1 3/4	5 1/2	1	2 3/4	7 1/8	3 1/2	2 11/16	5/8	3 9/16	2 29/32	7/8	18.00
	2 7/16	ZAS220772					ZA220772													
	2 1/2	ZAS220872					ZA220872													
	60.00	*ZAS2060MM72*	*231.78*	*38.10*	*139.70*	*25.40*	*ZA2060MM72*	*234.95*	*44.45*	*139.70*	*25.40*	*69.85*	*180.98*	*88.90*	*68.26*	*16.00*	*90.50*	*73.810*	*22.23*	*8.20*
	65.00	*ZAS2065MM72*					*ZA2065MM72*													
9	2 11/16	ZAS221172	10 7/16	1 1/8	6 7/16	1 1/8	ZA221172	10 7/16	2 1/4	6 7/16	1 1/8	3 1/4	8 1/8	4	3 3/16	3/4	4 1/16	3 3/8	7/8	25.50
	2 3/4	ZAS221272					ZA221272													
	2 15/16	ZAS221572					ZA221572													
	3	ZAS230072					ZA230072													
	70.00	*ZAS2070MM72*	*265.11*	*28.58*	*163.51*	*28.58*	*ZA2070MM72*	*265.11*	*57.15*	*163.51*	*28.58*	*82.55*	*206.38*	*101.60*	*80.96*	*19.00*	*103.20*	*85.730*	*22.23*	*11.60*
	75.00	*ZAS2075MM72*					*ZA2075MM72*													
10	3 3/16	ZAS230372	13	2 1/4	7 1/2	1 5/8	ZA230372	13	2 1/4	7 1/2	1 5/8	3 3/4	10	4 3/8	3 7/16	7/8	4 29/32	3 31/32	15/16	42.50
	3 7/16	ZAS230772					ZA230772													
	3 1/2	ZAS230872					ZA230872													
	80.00	*ZAS2080MM72*	*330.20*	*57.15*	*190.50*	*41.28*	*ZA2080MM72*	*330.20*	*57.15*	*190.50*	*41.28*	*95.25*	*254.00*	*111.13*	*87.31*	*22.00*	*124.62*	*100.810*	*23.81*	*19.30*
	85.00	*ZAS2085MM72*					*ZA2085MM72*													
	90.00	*ZAS2090MM72*					*ZA2090MM72*													
11	3 11/16	ZAS231172	14 1/4	2 1/8	8 1/2	1 3/4	ZA231172	14 1/4	2 1/8	8 1/2	1 3/4	4 1/8	10 7/8	5 1/16	4 1/8	1	5 5/8	4 9/16	1 1/32	52.50
	3 15/16	ZAS231572					ZA231572													
	4	ZAS240072					ZA240072													
	100.00	*ZAS2100MM72*	*361.95*	*53.98*	*215.90*	*44.45*	*ZA2100MM72*	*361.95*	*53.98*	*215.90*	*44.45*	*104.78*	*276.23*	*128.59*	*104.78*	*25.00*	*142.90*	*115.890*	*26.19*	*23.80*

Additional Notes

- Please call 1-866-REXNORD for availability
- Metric bore sizes available, see the Rex Interchangeability guide
- Lubrication fitting tap size 1/8" PT
- Base to centerline tolerance, +/-.005 in *(+/-0.13 mm)*
- Bore size = nominal shaft size +.001 in/-.000 in *(+0.03 mm/-0.00 mm)*
- Expansion - is 3/8" for all size codes
- Seals - To specify G, K or M seal, replace "Z" in part number with "G", "K" or "M"
- Auxiliary end caps - available in all size codes except ZAS series
- For the Selection Guide, Load Ratings and Speed Limits, see the Spherical Roller Bearings Engineering section on pages 15 - 27.
- Note: Dimensions subject to change. Certified dimensions of ordered material furnished on request.

ZA3000-72, ZAS3000-72

Photo Shows a 2-Bolt Spherical Roller Bearing Pillow Block Unit

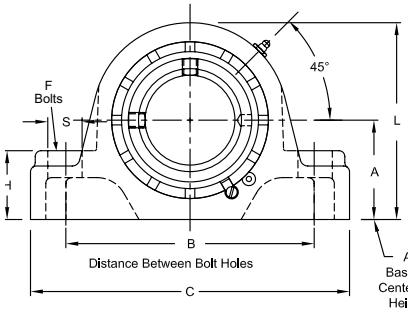

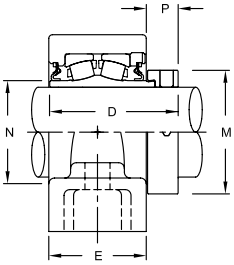

Fixed Block

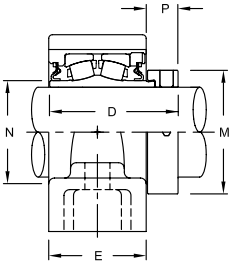

Floating Block

Product Features

- Corrosion-resistant powder coating
- Cast steel housing
- Misalignment capabilities - total of 4°
- Broad range of sealing options
- Factory set clearance & lubrication
- Precision ground & superfinished raceways
- Eccentric locking collar
- Field interchangeable seals
- Fixed or Expansion - total of 3/8" expansion
- See Features and Benefits for additional info on pages 10 - 13.

Bearing Dimensions

Size Code	Shaft Diameter	Expansion					Fixed					A Base to Centerline Height	B Distance Between Bolt Holes	D	E	F Bolts	M	N	P	Approx. Weight
		Part Number	C	H	L	S	Part Number	C	H	L	S									
Two-Bolt Pillow Block																				
4	1 7/16	ZAS310772	6 9/16	1	3 7/8	7/8	ZA310772	6 9/16	1	3 5/8	7/8	1 7/8	5	2 59/64	2 1/4	1/2	2 5/16	1 3/4	3/4	8.00
5	1 11/16	ZAS311172	7 1/8	1 1/8	4 3/8	7/8	ZA311172	7 1/8	1 1/8	4 3/16	7/8	2 1/8	5 1/2	3 3/16	2 1/2	1/2	2 19/32	2 1/32	3/4	10.50
6	1 15/16	ZAS311572	8 1/8	1 1/4	4 9/16	15/16	ZA311572	8 3/8	1 3/8	4 9/16	1	2 1/4	6 1/4	3 9/32	2 1/2	5/8	2 3/4	2 5/16	13/16	12.00
7	2 3/16	ZAS320372	8 5/8	1 5/16	5	1	ZA320372	8 7/8	1 5/8	5	1	2 1/2	6 3/4	3 1/2	2 9/16	5/8	3 1/4	2 5/8	31/32	15.00
8	2 7/16	ZAS320772	9 1/8	1 1/2	5 1/2	1	ZA320772	9 1/4	1 3/4	5 1/2	1	2 3/4	7 1/8	3 21/32	2 11/16	5/8	3 9/16	2 29/32	1 1/64	18.00
	2 1/2	ZAS320872					ZA320872													
9	2 11/16	ZAS321172	10 7/16	1 1/8	6 7/16	1 1/8	ZA321172	10 7/16	2 1/4	6 7/16	1 1/8	3 1/4	8 1/8	4 13/64	3 3/16	3/4	4 1/16	3 3/8	1 1/64	26.80
	2 15/16	ZAS321572					ZA321572													
10	3 7/16	ZAS330772	13	2 1/4	7 1/2	1 5/8	ZA330772	13	2 1/4	7 1/2	1 5/8	3 3/4	10	4 9/16	3 7/16	7/8	4 29/32	3 31/32	1 9/64	42.50
	3 1/2	ZAS330872					ZA330872													
11	3 15/16	ZAS331572	14 1/4	2 1/8	8 1/2	1 3/4	ZA331572	14 1/4	2 1/8	8 1/2	1 3/4	4 1/8	10 7/8	5 3/16	4 1/8	1	5 5/8	4 9/16	1 1/16	52.00

Additional Notes

- Please call 1-866-REXNORD for availability
- Lubrication fitting tap size 1/8" PT
- Base to centerline tolerance, +/-.005 in *(+/-0.13 mm)*
- Bore size = nominal shaft size +.001 in/-.000 in *(+0.03 mm/-0.00 mm)*
- Expansion - is 3/8" for all size codes
- Seals - To specify G, K or M seal, replace "Z" in part number with "G", "K" or "M"
- Auxiliary end caps - available in all size codes except ZAS series

For the Selection Guide, Load Ratings and Speed Limits, see the Spherical Roller Bearings Engineering section on pages 15 - 27.

Note: Dimensions subject to change. Certified dimensions of ordered material furnished on request.

ZA5000-72, ZAS5000-72

Photo Shows a 2-Bolt Spherical Roller Bearing Pillow Block Unit

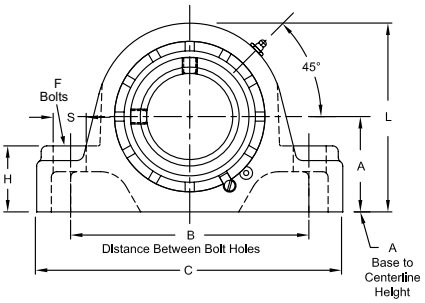

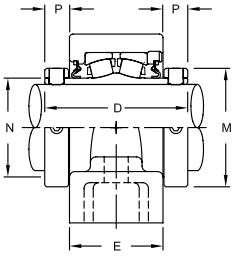

Fixed Block

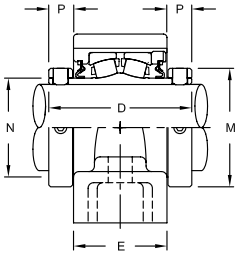

Floating Block

Product Features

- Corrosion-resistant powder coating
- Cast steel housing
- Misalignment capabilities - total of 4°
- Broad range of sealing options
- Factory set clearance & lubrication
- Precision ground & superfinished raceways
- Two hardened spring locking collars
- Field interchangeable seals
- Fixed or Expansion - total of 3/8" expansion
- See Features and Benefits for additional info on pages 10 - 13.

Bearing Dimensions

Size Code	Shaft Diameter	Expansion						Fixed						A Base to Centerline Height	B Distance Between Bolt Holes	D	E	F Bolts	M	N	P
		Part Number	C	H	L	S	Approx. Weight	Part Number	C	H	L	S	Approx. Weight								
Two-Bolt Pillow Block																					
4	1 7/16	ZAS510772	6 9/16	1	3 7/8	7/8	8.50	ZA510772	6 9/16	1	3 5/8	7/8	7.30	1 7/8	5	3 9/16	2 1/4	1/2	2 5/16	1 3/4	11/16
	35.00	*ZAS5035MM72*	*166.69*	*25.40*	*98.43*	*22.23*	*3.90*	*ZA5035MM72*	*166.69*	*25.40*	*92.08*	*22.23*	*3.30*	*47.63*	*127.00*	*90.49*	*57.15*	*13.00*	*58.74*	*44.450*	*17.46*
5	1 1/2	ZAS510872	7 1/8	1 1/8	4 3/8	7/8	12.10	ZA510872	7 1/8	1 1/8	4 3/16	7/8	10.70	2 1/8	5 1/2	3 13/16	2 1/2	1/2	2 19/32	2 1/32	11/16
	1 11/16	ZAS511172					11.70	ZA511172					10.30								
	40.00	*ZAS5040MM72*	*180.98*	*28.58*	*111.13*	*22.23*	*5.50*	*ZA5040MM72*	*180.98*	*28.58*	*106.36*	*22.23*	*4.90*	*53.98*	*139.70*	*96.84*	*63.50*	*13.00*	*65.88*	*51.590*	*17.46*
	45.00	*ZAS5045MM72*						*ZA5045MM72*					*4.70*								
6	1 15/16	ZAS511572	8 1/8	1 1/4	4 9/16	15/16	12.80	ZA511572	8 3/8	1 3/8	4 9/16	1	11.90	2 1/4	6 1/4	3 13/16	2 1/2	5/8	2 7/8	2 5/16	11/16
	50.00	*ZAS5050MM72*	*206.38*	*31.75*	*115.89*	*23.81*	*5.80*	*ZA5050MM72*	*212.73*	*34.93*	*115.89*	*25.40*	*5.40*	*57.15*	*158.75*	*96.84*	*63.50*	*16.00*	*73.03*	*58.740*	*17.46*
7	2	ZAS520072	8 5/8	1 5/16	5	1	16.50	ZA520072	8 7/8	1 5/8	5	1	16.00	2 1/2	6 3/4	4 1/8	2 9/16	5/8	3 1/4	2 5/8	13/16
	2 3/16	ZAS520372					15.20	ZA520372					15.40								
	55.00	*ZAS5055MM72*	*219.08*	*33.34*	*127.00*	*25.40*	*7.00*	*ZA5055MM72*	*225.43*	*41.28*	*127.00*	*25.40*	*7.00*	*63.50*	*171.45*	*104.78*	*65.09*	*16.00*	*82.60*	*66.680*	*20.64*
8	2 7/16	ZAS520772	9 1/8	1 1/2	5 1/2	1	19.40	ZA520772	9 1/4	1 3/4	5 1/2	1	18.60	2 3/4	7 1/8	4 3/8	2 11/16	5/8	3 9/16	2 29/32	7/8
	60.00	*ZAS5060MM72*	*231.78*	*38.10*	*139.70*	*25.40*	*8.80*	*ZA5060MM72*	*234.95*	*44.45*	*139.70*	*25.40*	*8.50*	*69.85*	*180.98*	*111.13*	*68.26*	*16.00*	*90.50*	*73.810*	*22.23*
	65.00	*ZAS5065MM72*					*8.60*	*ZA5065MM72*					*8.30*								
9	2 1/2	ZAS520872	10 7/16	1 1/8	6 7/16	1 1/8	29.70	ZA520872	10 7/16	2 1/4	6 7/16	1 1/8	28.90	3 1/4	8 1/8	4 7/8	3 3/16	3/4	4 1/16	3 3/8	7/8
	2 11/16	ZAS521172					28.70	ZA521172					27.90								
	2 15/16	ZAS521572					28.20	ZA521572					27.40								
	70.00	*ZAS5070MM72*	*265.11*	*28.58*	*163.51*	*28.58*	*13.00*	*ZA5070MM72*	*265.11*	*57.15*	*163.51*	*28.58*	*13.50*	*82.55*	*206.38*	*123.83*	*80.96*	*19.00*	*103.20*	*85.730*	*22.23*
	75.00	*ZAS5075MM72*					*12.50*	*ZA5075MM72*					*13.00*								
10	3 3/16	ZAS530372	13	2 1/4	7 1/2	1 5/8	46.60	ZA530372	13	2 1/4	7 1/2	1 5/8	42.10	3 3/4	10	5 5/16	3 7/16	7/8	4 29/32	3 31/32	15/16
	3 7/16	ZAS530772					44.70	ZA530772					40.20								
	80.00	*ZAS5080MM72*	*330.20*	*57.15*	*190.50*	*41.28*	*21.10*	*ZA5080MM72*	*330.20*	*57.15*	*190.50*	*41.28*	*19.00*	*95.25*	*254.00*	*134.94*	*87.31*	*22.00*	*124.62*	*100.810*	*23.81*
	85.00	*ZAS5085MM72*						*ZA5085MM72*													
	90.00	*ZAS5090MM72*					*20.30*	*ZA5090MM72*					*18.20*								
11	3 11/16	ZAS531172	14 1/4	2 1/8	8 1/2	1 3/4	59.50	ZA531172	14 1/4	2 1/8	8 1/2	1 3/4	50.80	4 1/8	10 7/8	6 1/8	4 1/8	1	5 5/8	4 9/16	1 1/32
	3 15/16	ZAS531572					58.50	ZA531572					49.80								
	4	ZAS540072					57.50	ZA540072					48.80								
	100.00	*ZAS5100MM72*	*361.95*	*53.98*	*215.90*	*44.45*	*26.50*	*ZA5100MM72*	*361.95*	*53.98*	*215.90*	*44.45*	*22.50*	*104.78*	*276.23*	*155.58*	*104.78*	*25.00*	*142.90*	*115.890*	*26.19*

Additional Notes

- Please call 1-866-REXNORD for availability
- Metric bore sizes available, see the Rex Interchangeability guide
- Lubrication fitting tap size 1/8" PT
- Base to centerline tolerance, +/-.005 in *(+/-0.13 mm)*
- Bore size = nominal shaft size +.001 in/-.000 in *(+0.03 mm/-0.00 mm)*
- Expansion - is 3/8" for all size codes
- Seals - To specify G, K or M seal, replace "Z" in part number with "G", "K" or "M"
- Auxiliary end caps - available in all size codes except ZAS series
- For the Selection Guide, Load Ratings and Speed Limits, see the Spherical Roller Bearings Engineering section on pages 15 - 27.
- Note: Dimensions subject to change. Certified dimensions of ordered material furnished on request.

ZA6000-72, ZAS6000-72

Photo Shows a 2-Bolt Spherical Roller Bearing Pillow Block Unit

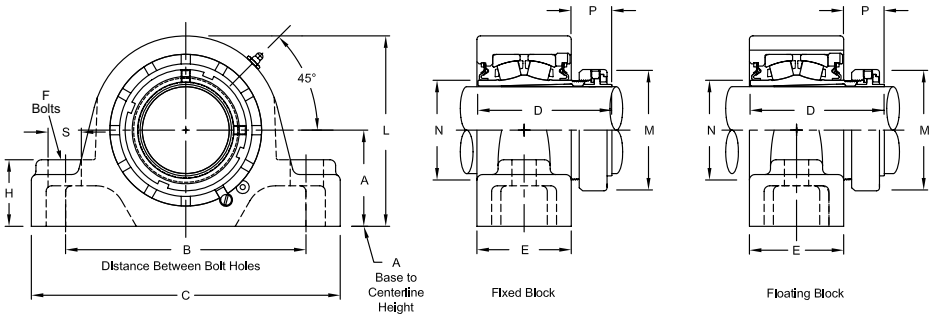

Product Features

- Spyglass Optical Strain Sensor (OSS) Technology
- Positive locking system
- Tapered adapter sleeve
- Corrosion-resistant powder coating
- Cast steel housing
- Misalignment capabilities - total of 4°
- Broad range of sealing options
- Factory set clearance & lubrication
- Precision ground & superfinished raceways
- See Features and Benefits for additional info on pages 10 - 13.

Bearing Dimensions

Size Code	Shaft Diameter	Expansion Part Number	Expansion C	Expansion H	Expansion S	Expansion Approx. Weight	Fixed Part Number	Fixed C	Fixed H	Fixed S	Fixed Approx. Weight	A Base to Centerline Height	B Distance Between Bolt Holes	D	E	F Bolts	L	M	N	P
Two-Bolt Pillow Block																				
4	1 7/16	ZAS610772	6 7/8	1 3/16	13/16	7.50	ZAS610772	6 7/8	1 3/16	13/16	7.50	1 7/8	5	3 21/64	2 1/4	1/2	3 11/16	2 25/64	1 3/4	1 9/64
5	1 11/16	ZAS611172	7 3/8	1 5/16	13/16	9.20	ZA611172	7 3/8	1 5/16	13/16	9.20	2 1/8	5 1/2	3 47/64	2 1/2	1/2	4 3/8	2 41/64	2 1/32	1 9/32
6	1 15/16	ZAS611572	8 1/8	1 1/4	15/16	12.20	ZA611572	8 3/8	1 3/8	1	11.30	2 1/4	6 1/4	3 41/64	2 1/2	5/8	4 9/16	2 55/64	2 5/16	1 1/8
	45.00	*ZAS6045MM72*	*206.38*	*31.75*	*23.81*	*5.80*	*ZA6045MM72*	*212.73*	*34.93*	*25.40*	*5.40*	*57.15*	*158.75*	*92.47*	*63.50*	*16.00*	*115.89*	*72.63*	*58.740*	*28.58*
7	2 3/16	ZAS620372	8 5/8	1 5/16	1	14.80	ZA620372	8 7/8	1 5/8	1	14.30	2 1/2	6 3/4	3 11/16	2 9/16	5/8	5	3 15/64	2 5/8	1 5/32
	55.00	*ZAS6055MM72*	*219.08*	*33.34*	*25.40*	*7.00*	*ZA6055MM72*	*225.43*	*41.28*	*25.40*	*7.00*	*63.50*	*171.45*	*93.66*	*65.09*	*16.00*	*127.00*	*82.15*	*66.680*	*29.37*
8	2 3/8	ZAS620672	9 1/8	1 1/2	1	18.50	ZA620672	9 1/4	1 3/4	1	17.70	2 3/4	7 1/8	4 1/16	2 11/16	5/8	5 1/2	3 19/32	2 29/32	1 27/64
	2 7/16	ZAS620772				18.40	ZA620772				17.60									
	60.00	*ZAS6060MM72*	*231.78*	*38.10*	*25.40*	*8.80*	*ZA6060MM72*	*234.95*	*44.45*	*25.40*	*8.50*	*69.85*	*180.98*	*103.19*	*68.26*	*16.00*	*139.70*	*91.28*	*73.810*	*36.12*
9	2 11/16	ZAS621172	10 7/16	1 1/8	1 1/8	27.00	ZA621172	10 7/16	2 1/4	1 1/8	26.20	3 1/4	8 1/8	4 17/32	3 3/16	3/4	6 7/16	4 3/32	3 3/8	1 25/64
	2 3/4	ZAS621272				26.60	ZA621272				25.80									
	2 15/16	ZAS621572				25.50	ZA621572				24.70									
	70.00	*ZAS6070MM72*	*265.11*	*28.58*	*28.58*	*13.00*	*ZA6070MM72*	*265.11*	*57.15*	*28.58*	*13.50*	*82.55*	*206.38*	*115.09*	*80.96*	*19.00*	*163.51*	*103.98*	*85.730*	*35.32*
	75.00	*ZAS6075MM72*				*12.50*	*ZA6075MM72*				*13.00*									
10	3 3/16	ZAS630372	13	2 1/4	1 5/8	44.00	ZA630372	13	2 1/4	1 5/8	39.50	3 3/4	10	5 1/32	3 7/16	7/8	7 1/2	4 61/64	3 31/32	1 19/32
	3 7/16	ZAS630772				42.50	ZA630772				41.50									
	80.00	*ZAS6080MM72*	*330.20*	*57.15*	*41.28*	*21.10*	*ZA6080MM72*	*330.20*	*57.15*	*41.28*	*19.00*	*95.25*	*254.00*	*127.79*	*87.31*	*22.00*	*190.50*	*125.81*	*100.810*	*40.48*
	85.00	*ZAS6085MM72*					*ZA6085MM72*													
11	3 11/16	ZAS631172	14 1/4	2 1/8	1 3/4	57.00	ZA631172	14 1/4	2 1/8	1 3/4	48.30	4 1/8	10 7/8	5 25/32	4 1/8	1	8 1/2	5 43/64	4 9/16	1 47/64
	3 15/16	ZAS631572				55.00	ZA631572				46.30									
	90.00	*ZAS6090MM72*	*361.95*	*53.98*	*44.45*	*26.50*	*ZA6090MM72*	*361.95*	*53.98*	*44.45*	*22.50*	*104.78*	*276.23*	*146.84*	*104.78*	*25.00*	*215.90*	*144.07*	*115.890*	*44.05*
	100.00	*ZAS6100MM72*					*ZA6100MM72*													

Additional Notes

- Please call 1-866-REXNORD for availability
- Metric bore sizes available, see the Rex Interchangeability guide
- Lubrication fitting tap size 1/8" PT
- Base to centerline tolerance, +/-.005 in *(+/-0.13 mm)*
- Expansion - is 3/8" for all size codes
- Seals - To specify G, K or M seal, replace "Z" in part number with "G", "K" or "M"
- Auxiliary end caps - available in all size codes except ZAS series

For the Selection Guide, Load Ratings and Speed Limits, see the Spherical Roller Bearings Engineering section on pages 15 - 27.

Note: Dimensions subject to change. Certified dimensions of ordered material furnished on request.

ZA9000-72, ZAS9000-72

Photo Shows a 2-Bolt Spherical Roller Bearing Pillow Block Unit

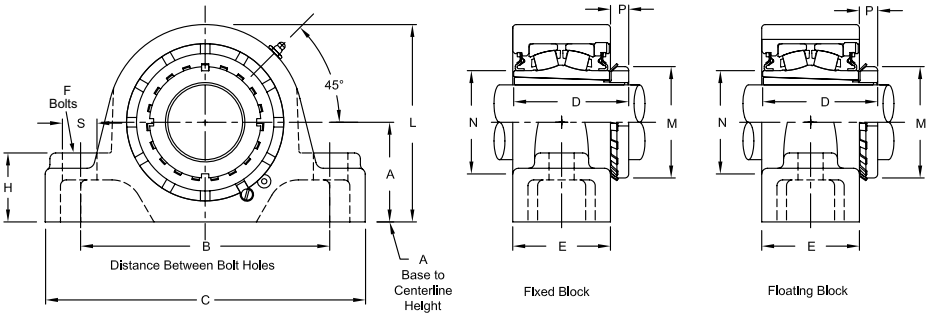

Product Features

- Corrosion-resistant powder coating
- Cast steel housing
- Misalignment capabilities - total of 4°
- Broad range of sealing options
- Factory set clearance & lubrication
- Precision ground & superfinished raceways
- Enhanced life mounting style
- Field interchangeable seals
- Fixed or Expansion - total of 3/8" expansion
- See Features and Benefits for additional info on pages 10 - 13.

Bearing Dimensions

Size Code	Shaft Diameter	Expansion				Fixed				A Base to Centerline Height	B Distance Between Bolt Holes	D	E	F Bolts	L	M	N	P	S
		Part Number	C	H	Approx. Weight	Part Number	C	H	Approx. Weight										
Two-Bolt Pillow Block																			
7	1 15/16	ZAS911572	8 5/8	1 5/16	15.00	ZA911572	8 7/8	1 5/8	14.50	2 1/2	6 3/4	3 5/32	2 9/16	5/8	5	2 31/32	2 5/8	19/32	1
	2	ZAS920072			14.90	ZA920072			14.40										
	45.00	*ZAS9045MM72*	*219.08*	*33.34*	*6.80*	*ZA9045MM72*	*225.43*	*41.28*	*6.60*	*63.50*	*171.45*	*80.17*	*65.09*	*16.00*	*127.00*	*75.40*	*66.680*	*15.08*	*25.40*
	50.00	*ZAS9050MM72*				*ZA9050MM72*													
8	2 3/16	ZAS920372	9 1/8	1 1/2	18.70	ZA920372	9 1/4	1 3/4	17.90	2 3/4	7 1/8	3 11/32	2 11/16	5/8	5 1/2	3 3/8	2 29/32	23/32	1
	55.00	*ZAS9055MM72*	*231.78*	*38.10*	*8.50*	*ZA9055MM72*	*234.95*	*44.45*	*8.10*	*69.85*	*180.98*	*84.93*	*68.26*	*16.00*	*139.70*	*85.73*	*73.810*	*18.26*	*25.40*
9	2 7/16	ZAS920772	10 7/16	1 1/8	26.30	ZA920772	10 7/16	2 1/4	25.50	3 1/4	8 1/8	3 3/4	3 3/16	3/4	6 7/16	3 5/8	3 3/8	5/8	1 1/8
	2 1/2	ZAS920872			25.90	ZA920872			25.10										
10	2 11/16	ZAS921172	13	2 1/4	45.20	ZA921172	13	2 1/4	40.70	3 3/4	10	4 1/4	3 7/16	7/8	7 1/2	4 13/32	3 31/32	13/16	1 5/8
	2 15/16	ZAS921572			44.00	ZA921572			39.50										
	75.00	*ZAS9075MM72*	*330.20*	*57.15*	*19.90*	*ZA9075MM72*	*330.20*	*57.15*	*18.00*	*95.25*	*254.00*	*107.95*	*87.31*	*22.00*	*190.50*	*111.92*	*100.810*	*20.64*	*41.28*
11	3 3/16	ZAS930372	14 1/4	2 1/8	60.00	ZA930372	14 1/4	2 1/8	51.30	4 1/8	10 7/8	5	4 1/8	1	8 1/2	5 3/16	4 9/16	15/16	1 3/4
	3 7/16	ZAS930772			57.00	ZA930772			49.30										
	80.00	*ZAS9080MM72*	*361.95*	*53.98*	*26.00*	*ZA9080MM72*	*361.95*	*53.98*	*22.30*	*104.78*	*276.23*	*127.00*	*104.78*	*25.00*	*215.90*	*131.76*	*115.890*	*23.81*	*44.45*

Additional Notes

- Please call 1-866-REXNORD for availability
- Lubrication fitting tap size 1/8" PT
- Base to centerline tolerance, +/-.005 in *(+/-0.13 mm)*
- Expansion - is 3/8" for all size codes
- Seals - To specify G, K or M seal, replace “Z” in part number with “G”, “K” or “M”
- Auxiliary end caps - available in all size codes except ZAS series
- For the Selection Guide, Load Ratings and Speed Limits, see the Spherical Roller Bearings Engineering section on pages 15 - 27.

Note: Dimensions subject to change. Certified dimensions of ordered material furnished on request.

ZP5000, ZPS5000

Interchange: *QAAPXT, QAAPX*

Photo Shows a 2-Bolt Spherical Roller Bearing Pillow Block Unit

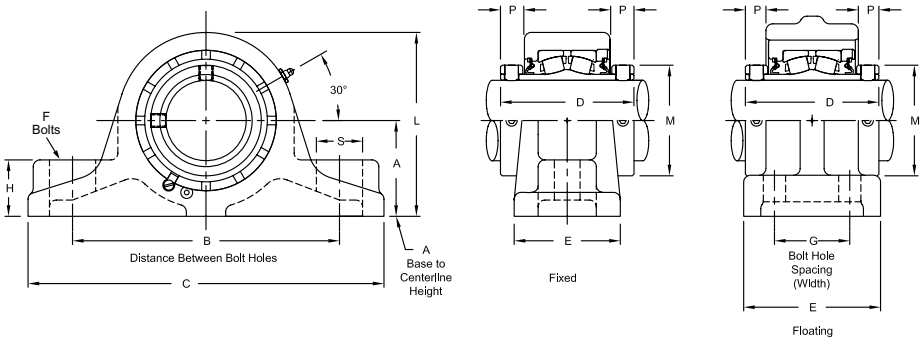

Product Features

- Corrosion-resistant powder coating
- Cast iron housing
- Misalignment capabilities - total of 4°
- Broad range of sealing options
- Factory set clearance & lubrication
- Precision ground & superfinished raceways
- Two hardened spring locking collars
- Field interchangeable seals
- Fixed or Expansion - Up to 3/4" expansion
- See Features and Benefits for additional info on pages 10 - 13.

Bearing Dimensions

Size Code	Shaft Diameter	Expansion				Fixed				A	B	G	C	D	E	F	H	M	S
		Part Number	L	P	Approx. Weight	Part Number	L	P	Approx. Weight	Base to Centerline Height	Distance Between Bolt Holes	Bolt Hole Spacing (Width)				Bolts			
Two-Bolt Pillow Block																			
4	1 7/16	ZPS5107	4 11/32	9/16	10.70	ZP5107	3 31/32	11/16	8.10	2 1/8	5 7/8	-	8 1/8	3 9/16	2 7/16	1/2	1 1/8	2 5/16	1 1/8
	35.00	*ZPS5035MM*	*110.31*	*14.29*	*4.90*	*ZP5035MM*	*100.79*	*17.46*	*3.70*	*59.98*	*149.23*	*-*	*206.38*	*90.49*	*61.91*	*13.00*	*28.58*	*58.74*	*28.58*
5	1 1/2	ZPS5108	4 13/16	1/2	15.70	ZP5108	4 7/16	11/16	11.90	2 5/16	6 1/2	-	9	3 13/16	2 13/16	1/2	1 5/16	2 19/32	1 1/4
	1 11/16	ZPS5111			15.10	ZP5111			11.60										
	40.00	*ZPS5040MM*	*122.24*	*12.70*	*7.10*	*ZP5040MM*	*112.71*	*17.46*	*5.40*	*58.74*	*165.10*	*-*	*228.60*	*96.84*	*71.44*	*13.00*	*33.34*	*65.88*	*31.75*
	45.00	*ZPS5045MM*			*6.80*	*ZP5045MM*			*5.20*										
6	1 15/16	ZPS5115	4 15/16	9/16	16.10	ZP5115	4 3/4	11/16	13.40	2 1/2	7	-	9 3/4	3 13/16	2 7/8	5/8	1 7/16	2 7/8	1 1/4
	50.00	*ZPS5050MM*	*125.41*	*14.29*	*7.30*	*ZP5050MM*	*120.65*	*17.46*	*6.00*	*63.50*	*177.80*	*-*	*247.65*	*96.84*	*73.02*	*16.00*	*36.51*	*73.03*	*31.75*
7	2	ZPS5200	5 23/32	11/16	21.80	ZP5200	5 1/4	13/16	17.50	2 3/4	7 1/2	-	10 1/4	4 1/8	3 1/8	5/8	1 5/8	3 1/4	1 1/4
	2 3/16	ZPS5203			21.60	ZP5203			16.90										
	55.00	*ZPS5055MM*	*145.24*	*17.46*	*9.80*	*ZP5055MM*	*133.35*	*20.64*	*7.60*	*69.85*	*190.50*	*-*	*260.35*	*104.78*	*79.38*	*16.00*	*41.28*	*82.60*	*31.75*
8	2 7/16	ZPS5207	6 3/16	3/4	25.90	ZP5207	5 3/4	7/8	21.20	3	8 1/4	-	11 1/4	4 3/8	3 3/8	3/4	1 3/4	3 9/16	1 3/8
	60.00	*ZPS5060MM*	*157.16*	*19.05*	*11.70*	*ZP5060MM*	*146.05*	*22.23*	*9.60*	*76.20*	*209.55*	*-*	*285.75*	*111.13*	*85.73*	*19.00*	*44.45*	*90.50*	*34.93*
	65.00	*ZPS5065MM*			*11.20*	*ZP5065MM*			*9.00*										
9	2 1/2	ZPS5208	7 3/16	3/4	43.40	ZP5208	6 23/32	7/8	35.20	3 1/2	9 3/4	-	13	4 7/8	3 7/8	7/8	2 1/16	4 1/16	1 5/8
	2 11/16	ZPS5211			42.50	ZP5211			33.90										
	2 15/16	ZPS5215			40.40	ZP5215			32.60										
	70.00	*ZPS5070MM*	*182.56*	*19.05*	*19.20*	*ZP5070MM*	*170.64*	*22.23*	*15.40*	*88.90*	*247.65*	*-*	*330.20*	*123.83*	*98.43*	*22.00*	*52.39*	*103.20*	*41.28*
	75.00	*ZPS5075MM*			*18.70*	*ZP5075MM*			*15.00*										
Four-Bolt Pillow Block																			
6	1 15/16	ZPS5115F	5 5/32	9/16	17.70	ZP5115F	5	11/16	15.80	2 1/2	7	2 1/4	9 3/4	3 13/16	4	5/8	1	2 7/8	1 1/4
	50.00	*ZPS5050MMF*	*130.96*	*14.29*	*8.00*	*ZP5050MMF*	*127.00*	*17.46*	*7.20*	*63.50*	*177.80*	*57.15*	*247.65*	*96.84*	*101.60*	*16.00*	*25.40*	*73.03*	*31.75*
7	2	ZPS5200F	5 23/32	11/16	22.10	ZP5200F	5 1/2	13/16	19.60	2 3/4	7 1/2	2 1/4	10 1/4	4 1/8	4 1/8	5/8	1	3 1/4	1 1/4
	2 3/16	ZPS5203F			21.70	ZP5203F			18.80										
	55.00	*ZPS5055MMF*	*145.24*	*17.46*	*9.80*	*ZP5055MMF*	*39.70*	*20.64*	*8.50*	*69.85*	*190.50*	*57.15*	*260.35*	*104.78*	*104.78*	*16.00*	*25.40*	*82.60*	*31.75*
8	2 7/16	ZPS5207F	6 7/32	3/4	27.40	ZP5207F	6	7/8	24.40	3	8 1/4	2 5/8	11 1/4	4 3/8	4 1/2	5/8	1 1/8	3 9/16	1 1/4
	60.00	*ZPS5060MMF*	*157.94*	*19.05*	*12.40*	*ZP5060MMF*	*152.40*	*22.23*	*11.00*	*76.20*	*209.55*	*66.68*	*285.75*	*111.13*	*114.30*	*16.00*	*28.58*	*90.50*	*31.75*
	65.00	*ZPS5065MMF*			*12.00*	*ZP5065MMF*			*10.50*										
9	2 1/2	ZPS5208F	7 5/16	3/4	44.20	ZP5208F	7 1/16	7/8	38.20	3 1/2	9 3/4	2 3/4	13	4 7/8	5	3/4	1 3/8	4 1/16	1 1/2
	2 11/16	ZPS5211F			43.40	ZP5211F			37.20										
	2 15/16	ZPS5215F			41.80	ZP5215F			35.10										
	70.00	*ZPS5070MMF*	*185.74*	*19.05*	*19.70*	*ZP5070MMF*	*170.39*	*22.23*	*16.90*	*88.90*	*247.65*	*69.85*	*330.20*	*123.83*	*127.00*	*19.00*	*34.93*	*103.20*	*38.10*
	75.00	*ZPS5075MMF*			*19.20*	*ZP5075MMF*			*16.50*										
10	3 3/16	ZPS5303F	8 3/8	13/16	59.00	ZP5303F	8 1/8	15/16	52.00	4	11 1/2	3	15	5 5/16	5	3/4	1 1/2	4 29/32	1 1/2
	3 7/16	ZPS5307F			57.00	ZP5307F			51.00										

Continued...

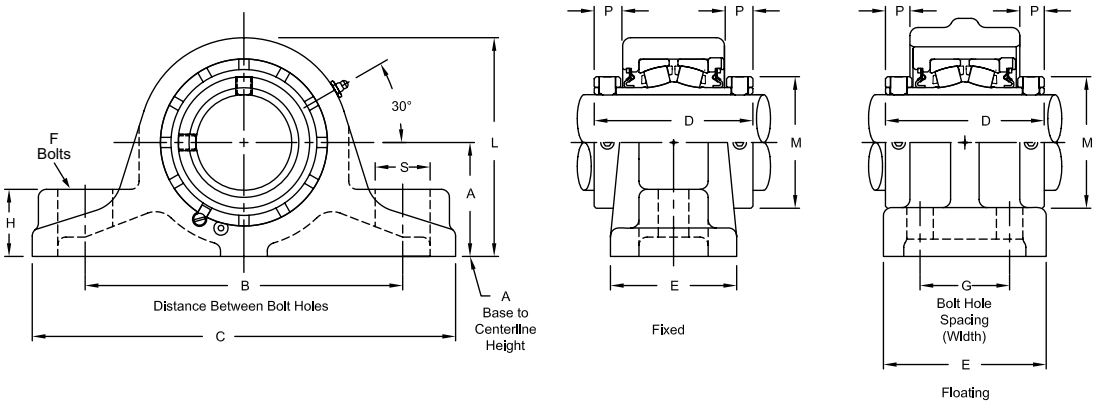

Continued...

Bearing Dimensions

Size Code	Shaft Diameter	Expansion Part Number	Expansion L	Expansion P	Expansion Approx. Weight	Fixed Part Number	Fixed L	Fixed P	Fixed Approx. Weight	A Base to Centerline Height	B Distance Between Bolt Holes	G Bolt Hole Spacing (Width)	C	D	E	F Bolts	H	M	S
Four-Bolt Pillow Block (continued)																			
10	*80.00*	*ZPS5080MMF*	*212.73*	*20.64*	*26.80*	*ZP5080MMF*	*206.38*	*23.81*	*23.50*	*101.60*	*292.10*	*76.20*	*381.00*	*134.94*	*127.00*	*19.00*	*38.10*	*124.62*	*38.10*
	85.00	*ZPS5085MMF*			*26.30*	*ZP5085MMF*			*23.00*										
	90.00	*ZPS5090MMF*			*25.80*	*ZP5090MMF*			*22.50*										
11	3 11/16	ZPS5311F	10 1/4	29/32	98.00	ZP5311F	9 7/8	1 1/32	86.00	5	13 1/4	3 1/2	16 3/4	6 1/8	6	7/8	1 1/2	5 5/8	1 1/2
	3 15/16	ZPS5315F			96.00	ZP5315F			84.00										
	4	ZPS5400F			95.00	ZP5400F			83.00										
	100.00	*ZPS5100MMF*	*260.35*	*23.01*	*43.50*	*ZP5100MMF*	*250.83*	*26.19*	*38.00*	*127.00*	*336.55*	*88.90*	*425.45*	*155.58*	*152.40*	*22.00*	*38.10*	*142.90*	*336.55*
12	4 3/16	ZPS5403YF	11 5/8	7/8	122.00	ZP5403YF	11 1/4	1 1/16	110.00	5 3/4	14 3/4	4	18 1/2	6 1/4	6 3/4	1	1 3/4	6 3/16	1 13/16
	4 7/16	ZPS5407YF			119.00	ZP5407YF			108.00										
	4 1/2	ZPS5408YF			118.00	ZP5408YF			107.00										
	110.00	*ZPS5110MMF*	*295.28*	*22.23*	*54.00*	*ZP5110MMF*	*285.75*	*26.99*	*49.00*	*146.05*	*374.65*	*101.60*	*469.90*	*158.75*	*171.45*	*25.00*	*44.45*	*157.16*	*46.04*
	115.00	*ZPS5115MMF*			*53.50*	*ZP5115MMF*			*48.50*										
13	4 15/16	ZPS5415F	13 1/8	15/16	206.00	ZP5415F	12 1/2	1 5/32	171.00	6 1/8	16	4 1/4	20 1/4	7 7/8	7 1/2	1 1/8	1 7/8	7 1/16	2
	5	ZPS5500F			203.00	ZP5500F			168.00										
	125.00	*ZPS5125MMF*	*333.38*	*23.81*	*93.00*	*ZP5125MMF*	*317.50*	*29.37*	*78.00*	*155.58*	*406.40*	*107.95*	*514.35*	*200.03*	*190.50*	*28.00*	*47.63*	*179.39*	*50.80*
	130.00	*ZPS5130MMF*			*77.00*	*ZP5130MMF*			*92.00*										
14	5 7/16	ZPS5507F	14 3/8	1 3/32	226.00	ZP5507F	14	1 7/32	211.00	6 11/16	18 5/16	3 11/16	22	8	6 1/4	1 1/8	2	8 3/16	2 1/16
	140.00	*ZPS5140MMF*	*365.13*	*27.76*	*102.00*	*ZP5140MMF*	*355.60*	*30.96*	*96.00*	*169.86*	*465.14*	*93.66*	*558.80*	*203.20*	*158.75*	*28.00*	*50.80*	*207.96*	*52.39*
15	5 15/16	ZPS5515F	15 3/32	1 1/16	274.00	ZP5515F	14 3/4	1 5/32	255.00	7 1/16	20 1/2	4 3/16	24 3/4	8 1/8	6 3/4	1 1/8	2 1/8	8 5/8	2 1/4
	6	ZPS5600F			273.00	ZP5600F			254.00										
	150.00	*ZPS5150MMF*	*383.39*	*26.99*	*124.00*	*ZP5150MMF*	*374.65*	*29.37*	*115.00*	*179.39*	*520.70*	*106.36*	*628.65*	*206.38*	*171.45*	*28.00*	*53.98*	*219.08*	*57.15*
	160.00	*ZPS5160MMF*			*123.00*	*ZP5160MMF*			*114.00*										
16	6 7/16	ZPS5607F	16 3/4	1 3/16	366.00	ZP5607F	16 5/16	1 9/32	339.00	7 7/8	23	4 7/16	28	8 3/4	7 1/2	1 1/4	2 3/8	9 23/32	2 5/16
	6 15/16	ZPS5615F			352.00	ZP5615F			328.00										
	7	ZPS5700F			348.00	ZP5700F			326.00										
	180.00	*ZPS5180MMF*	*425.45*	*30.16*	*157.00*	*ZP5180MMF*	*414.34*	*32.54*	*148.00*	*200.03*	*584.20*	*112.71*	*711.20*	*222.25*	*190.50*	*32.00*	*60.33*	*246.86*	*58.74*

Additional Notes

Please call 1-866-REXNORD for availability

Metric bore sizes available, see the Rex Interchangeability guide

Lubrication fitting tap size: for size code 4 thru 11, 1/8" PT: for all other size codes, 1/4" PT

Base to centerline tolerance, +/-.005 in *(+/-0.13 mm)*

Bore size = nominal shaft size +.001 in/-.000 in *(+0.03 mm/-0.00 mm)*

Expansion - size code 4 thru 8 is 3/8", size code 9 thru 11 is 1/2" & size code 12 thru 16 is 3/4"

Seals - To specify G, K or M seal, replace "Z" in part number with "G", "K" or "M"

"K" seals only available in size codes 4 thru 11

"G" seals available in size codes 3 thru 13

Auxiliary end caps - available in all sizes

For the Selection Guide, Load Ratings and Speed Limits, see the Spherical Roller Bearings Engineering section on pages 15 - 27.

Note: Dimensions subject to change. Certified dimensions of ordered material furnished on request.

ZP6000, ZPS6000

Interchange: *QVVPXT, QVVPX*

Photo Shows a 2-Bolt Spherical Roller Bearing Pillow Block Unit

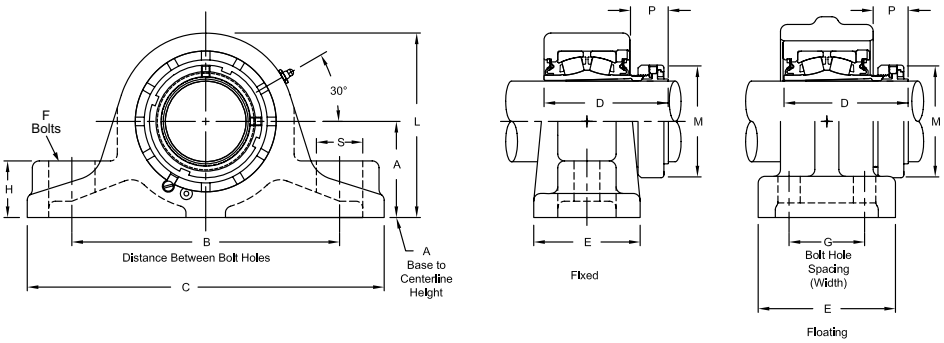

Product Features

- Spyglass Optical Strain Sensor (OSS) Technology
- Positive locking system
- Tapered adapter sleeve
- Corrosion-resistant powder coating
- Cast iron housing
- Misalignment capabilities - total of 4°
- Broad range of sealing options
- Factory set clearance & lubrication
- Precision ground & superfinished raceways
- See Features and Benefits for additional info on pages 10 - 13.

Bearing Dimensions

Size Code	Shaft Diameter	Expansion Part Number	Expansion L	Expansion P	Expansion Approx. Weight	Fixed Part Number	Fixed L	Fixed P	Fixed Approx. Weight	A Base to Center-line Height	B Distance Between Bolt Holes	G Bolt Hole Spacing (Width)	C	D	E	F Bolts	H	M	S
Two-Bolt Pillow Block																			
4	1 7/16	ZPS6107	4 11/32	1 9/64	10.20	ZP6107	3 11/16	1 9/64	7.60	2 1/8	5	-	8 1/8	3 21/64	2 7/16	1/2	1 1/8	2 25/64	1 1/8
5	1 11/16	ZPS6111	4 13/16	1 9/32	15.10	ZP6111	4 7/16	1 9/32	11.00	2 5/16	5 1/2	-	9	3 47/64	2 13/16	1/2	1 5/16	2 41/64	1 1/4
6	1 15/16	ZPS6115	4 15/16	1	16.10	ZP6115	4 3/4	1 1/8	13.40	2 1/2	7	-	9 3/4	3 41/64	2 7/8	5/8	1 7/16	2 55/64	1 1/4
	45.00	*ZPS6045MM*	*125.41*	*25.40*	*16.10*	*ZP6045MM*	*120.65*	*28.58*	*13.40*	*63.50*	*177.80*	*-*	*247.65*	*92.47*	*73.02*	*16.00*	*36.51*	*72.63*	*31.75*
7	2 3/16	ZPS6203	5 23/32	1 1/32	21.80	ZP6203	5 1/4	1 5/32	17.50	2 3/4	7 1/2	-	10 1/4	3 11/16	3 1/8	5/8	1 5/8	3 15/64	1 1/4
	55.00	*ZPS6055MM*	*145.24*	*26.19*	*9.80*	*ZP6055MM*	*133.35*	*29.37*	*7.60*	*69.85*	*190.50*	*-*	*260.35*	*93.66*	*79.38*	*16.00*	*41.28*	*82.15*	*31.75*
8	2 3/8	ZPS6206	6 3/16	1 19/64	25.90	ZP6206	5 3/4	1 27/64	22.20	3	8 1/4	-	11 1/4	4 1/16	3 3/8	3/4	1 3/4	3 19/32	1 3/8
	2 7/16	ZPS6207			24.90	ZP6207			21.20										
	60.00	*ZPS6060MM*	*157.16*	*32.94*	*11.70*	*ZP6060MM*	*146.05*	*36.12*	*9.60*	*76.20*	*209.55*	*-*	*285.75*	*103.19*	*85.73*	*19.00*	*44.45*	*91.28*	*34.93*
9	2 11/16	ZPS6211	7 3/16	1 17/64	43.40	ZP6211	6 23/32	1 25/64	35.20	3 1/2	9 3/4	-	13	4 17/32	3 7/8	7/8	2 1/16	4 3/32	1 5/8
	2 3/4	ZPS6212			42.40	ZP6212			34.20										
	2 15/16	ZPS6215			42.50	ZP6215			33.90										
	70.00	*ZPS6070MM*	*182.56*	*32.16*	*19.20*	*ZP6070MM*	*170.64*	*35.32*	*15.40*	*88.90*	*247.65*	*-*	*330.20*	*115.09*	*98.43*	*22.00*	*52.39*	*103.98*	*41.28*
	75.00	*ZPS6075MM*			*18.70*	*ZP6075MM*			*15.00*										
Four-Bolt Pillow Block																			
6	1 15/16	ZPS6115F	5 5/32	1	17.70	ZP6115F	5	1 1/8	15.80	2 1/2	7	2 1/4	9 3/4	3 41/64	4	5/8	1	2 55/64	1 1/4
	45.00	*ZPS6045MMF*	*130.96*	*25.40*	*17.70*	*ZP6045MMF*	*127.00*	*28.58*	*15.80*	*63.50*	*177.80*	*57.15*	*247.65*	*92.47*	*101.60*	*16.00*	*25.40*	*72.63*	*31.75*
7	2 3/16	ZPS6203F	5 23/32	1 1/32	22.10	ZP6203F	5 1/2	1 5/32	19.60	2 3/4	7 1/2	2 1/4	10 1/4	3 11/16	4 1/8	5/8	1	3 15/64	1 1/4
	55.00	*ZPS6055MMF*	*145.24*	*26.19*	*9.80*	*ZP6055MMF*	*39.70*	*29.37*	*8.50*	*69.85*	*190.50*	*57.15*	*260.35*	*93.66*	*104.78*	*16.00*	*25.40*	*82.15*	*31.75*
8	2 3/8	ZPS6206F	6 7/32	1 19/64	28.40	ZP6206F	6	1 27/64	25.40	3	8 1/4	2 5/8	11 1/4	4 1/16	4 1/2	5/8	1 1/8	3 19/32	1 1/4
	2 7/16	ZPS6207F			27.40	ZP6207F			24.40										
	60.00	*ZPS6060MMF*	*157.94*	*32.94*	*12.40*	*ZP6060MMF*	*152.40*	*36.12*	*11.00*	*76.20*	*209.55*	*66.68*	*285.75*	*103.19*	*114.30*	*16.00*	*28.58*	*91.28*	*31.75*
9	2 11/16	ZPS6211F	7 5/16	1 17/64	44.20	ZP6211F	7 1/16	1 25/64	38.20	3 1/2	9 3/4	2 3/4	13	4 17/32	5	3/4	1 3/8	4 3/32	1 1/2
	2 3/4	ZPS6212F			42.50	ZP6212F			36.50										
	2 15/16	ZPS6215F			43.40	ZP6215F			37.20										
	70.00	*ZPS6070MMF*	*185.74*	*32.16*	*19.70*	*ZP6070MMF*	*170.39*	*35.32*	*16.90*	*88.90*	*247.65*	*69.85*	*330.20*	*115.09*	*127.00*	*19.00*	*34.93*	*103.98*	*38.10*
	75.00	*ZPS6075MMF*			*19.20*	*ZP6075MMF*			*16.50*										
10	3 3/16	ZPS6303F	8 3/8	1 15/32	59.00	ZP6303F	8 1/8	1 19/32	52.00	4	11 1/2	3	15	5 1/32	5	3/4	1 1/2	4 61/64	1 1/2
	3 7/16	ZPS6307F			57.00	ZP6307F			51.00										
	80.00	*ZPS6080MMF*	*212.73*	*37.29*	*26.80*	*ZP6080MMF*	*206.38*	*40.48*	*23.50*	*101.60*	*292.10*	*76.20*	*381.00*	*127.79*	*127.00*	*19.00*	*38.10*	*125.81*	*38.10*
	85.00	*ZPS6085MMF*			*26.30*	*ZP6085MMF*			*23.00*										
11	3 11/16	ZPS6311F	10 1/4	1 39/64	98.00	ZP6311F	9 7/8	1 47/64	86.00	5	13 1/4	3 1/2	16 3/4	5 25/32	6	7/8	1 1/2	5 43/64	1 1/2
	3 15/16	ZPS6315F			96.00	ZP6315F			84.00										
	90.00	*ZPS6090MMF*	*260.35*	*40.87*	*43.50*	*ZP6090MMF*	*250.83*	*44.05*	*38.00*	*127.00*	*336.55*	*88.90*	*425.45*	*146.84*	*152.40*	*22.00*	*38.10*	*144.07*	*336.55*
	100.00	*ZPS6100MMF*				*ZP6100MMF*													

Continued...

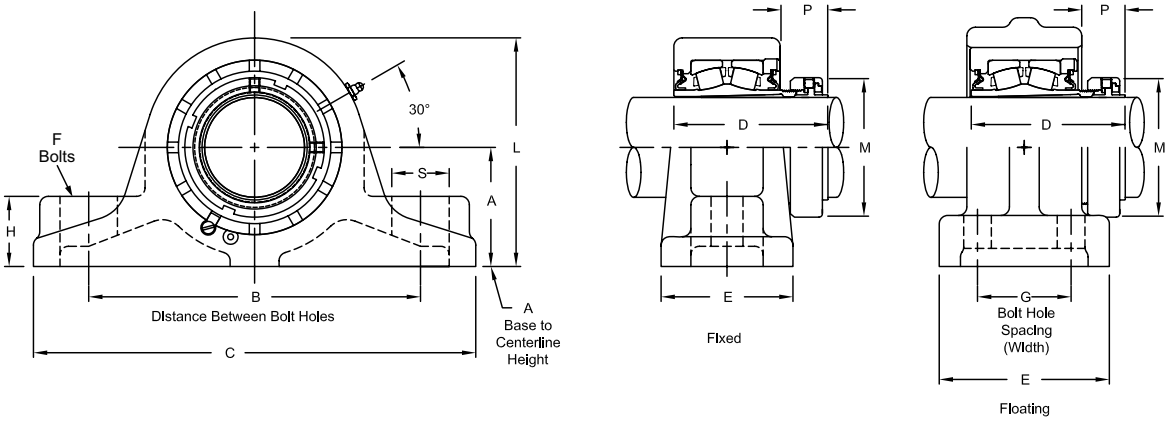

Continued...

Bearing Dimensions

Size Code	Shaft Diameter	Expansion Part Number	Expansion L	Expansion P	Expansion Approx. Weight	Fixed Part Number	Fixed L	Fixed P	Fixed Approx. Weight	A Base to Centerline Height	B Distance Between Bolt Holes	G Bolt Hole Spacing (Width)	C	D	E	F Bolts	H	M	S
Four-Bolt Pillow Block (continued)																			
12	4 3/16	ZPS6403YF	11 5/8	1 3/4	122.00	ZP6403YF	11 1/4	1 7/8	110.00	5 3/4	14 3/4	4	18 1/2	6 1/4	6 3/4	1	1 3/4	6 1/16	1 13/16
	4 7/16	ZPS6407YF			119.00	ZP6407YF			118.00										
	110.00	*ZPS6110MMF*	*295.28*	*44.45*	*54.00*	*ZP6110MMF*	*285.75*	*47.63*	*49.00*	*146.05*	*374.65*	*101.60*	*469.90*	*158.75*	*171.45*	*25.00*	*44.45*	*153.99*	*46.04*
13	4 15/16	ZPS6415F	13 1/8	2 1/64	206.00	ZP6415F	12 1/2	2 1/4	171.00	6 1/8	16	4 1/4	20 1/4	7 15/16	7 1/2	1 1/8	1 7/8	6 61/64	2
	125.00	*ZPS6125MMF*	*333.38*	*51.20*	*93.00*	*ZP6125MMF*	*317.50*	*57.15*	*78.00*	*155.58*	*406.40*	*107.95*	*514.35*	*201.61*	*190.50*	*28.00*	*47.63*	*176.61*	*50.80*
14	5 7/16	ZPS6507F	14 3/8	2 15/16	226.00	ZP6507F	14	3 3/64	211.00	6 11/16	18 5/16	3 11/16	-	8 49/64	6 1/4	1 1/8	2	8 1/64	2 1/16
15	5 15/16	ZPS6515F	15 5/32	3 23/64	274.00	ZP6515F	14 3/4	3 7/16	255.00	7 1/16	20 1/2	4 3/16	-	9 19/64	6 3/4	1 1/8	2 1/8	8 21/32	2 1/4
16	6 7/16	ZPS6607F	16 3/4	3 37/64	366.00	ZP6607F	16 5/16	3 43/64	339.00	7 7/8	23	4 7/16	-	10	7 1/2	1 1/4	2 3/8	9 3/4	2 5/16
	6 15/16	ZPS6615F			352.00	ZP6615F			328.00										

Additional Notes

Please call 1-866-REXNORD for availability

Metric bore sizes available, see the Rex Interchangeability guide

Lubrication fitting tap size: for size code 6 thru 11, 1/8" PT: for all other size codes, 1/4" PT

Base to centerline tolerance, +/-.005 in *(+/-0.13 mm)*

Expansion - size code 6 thru 8 is 3/8", size code 9 thru 11 is 1/2" & size code 12 thru 13 is 3/4"

Seals - To specify G, K or M seal, replace “Z” in part number with “G”, “K” or “M”

“K” seals only available in size codes 3 thru 11

“G” seals available in size codes 3 thru 13

Auxiliary end caps - available in all sizes

For the Selection Guide, Load Ratings and Speed Limits, see the Spherical Roller Bearings Engineering section on pages 15 - 27.

Note: Dimensions subject to change. Certified dimensions of ordered material furnished on request.

ZP9000, ZPS9000

Interchange: *QVVPKT, QVVPK, TAPKT, TAPK*

Photo Shows a 2-Bolt Spherical Roller Bearing Pillow Block Unit

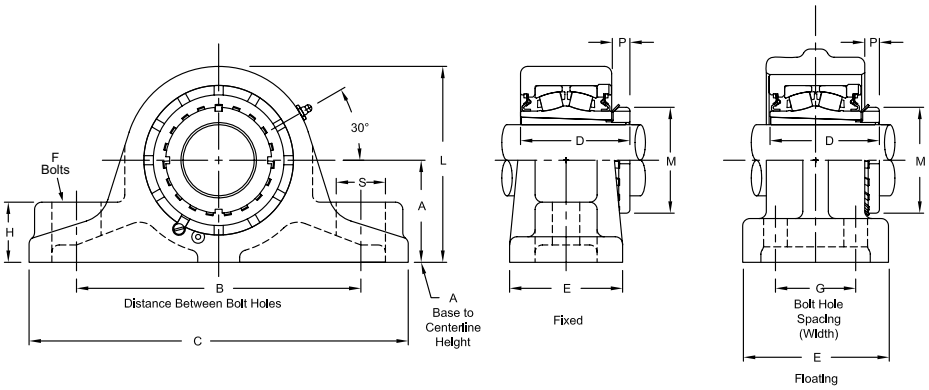

Product Features

- Corrosion-resistant powder coating
- Cast iron housing
- Misalignment capabilities - total of 4°
- Broad range of sealing options
- Factory set clearance & lubrication
- Precision ground & superfinished raceways
- Enhanced life mounting style
- Field interchangeable seals
- Fixed or Expansion - Up to 3/4" expansion
- See Features and Benefits for additional info on pages 10 - 13.

Bearing Dimensions

Size Code	Shaft Diameter	Expansion Part Number	Expansion L	Expansion P	Expansion Approx. Weight	Fixed Part Number	Fixed L	Fixed P	Fixed Approx. Weight	A Base to Centerline Height	B Distance Between Bolt Holes	G Bolt Hole Spacing (Width)	C	D	E	F Bolts	H	M	S
Two-Bolt Pillow Block																			
7	1 15/16	ZPS9115	5 23/32	1/2	20.50	ZP9115	5 1/4	19/32	16.00	2 3/4	7 1/2	-	10 1/4	3 5/32	3 1/8	5/8	1 5/8	2 31/32	1 1/4
	2	ZPS9200			20.30	ZP9200			15.90										
	45.00	*ZPS9045MM*	*145.24*	*12.70*	*9.30*	*ZP9045MM*	*133.35*	*15.08*	*7.00*	*69.85*	*190.50*	*-*	*260.35*	*80.17*	*79.38*	*16.00*	*41.28*	*75.40*	*31.75*
	50.00	*ZPS9050MM*			*9.10*	*ZP9050MM*			*6.80*										
8	2 3/16	ZPS9203	6 3/16	19/32	24.80	ZP9203	5 3/4	23/32	20.10	3	8 1/4	-	11 1/4	3 11/32	3 3/8	3/4	1 3/4	3 3/8	1 3/8
	55.00	*ZPS9055MM*	*157.16*	*15.09*	*11.20*	*ZP9055MM*	*146.05*	*18.26*	*9.10*	*76.20*	*209.55*	*-*	*285.75*	*84.93*	*85.73*	*19.00*	*44.45*	*85.73*	*34.93*
9	2 7/16	ZPS9207	7 3/16	19/32	40.60	ZP9207	6 23/32	5/8	32.20	3 1/2	9 3/4	-	13	3 3/4	3 7/8	7/8	2 1/16	3 5/8	1 5/8
	2 1/2	ZPS9208			40.50	ZP9208			31.90										
Four-Bolt Pillow Block																			
7	1 15/16	ZPS9115F	5 23/32	1/2	20.50	ZP9115F	5 1/2	19/32	18.10	2 3/4	7 1/2	2 1/4	10 1/4	3 5/32	4 1/8	5/8	1	2 31/32	1 1/4
	2	ZPS9200F			20.30	ZP9200F			17.90										
	45.00	*ZPS9045MMF*	*145.24*	*12.70*	*9.30*	*ZP9045MMF*	*39.70*	*15.08*	*8.20*	*69.85*	*190.50*	*57.15*	*260.35*	*80.17*	*104.78*	*16.00*	*25.40*	*75.40*	*31.75*
	50.00	*ZPS9050MMF*			*9.10*	*ZP9050MMF*			*8.00*										
8	2 3/16	ZPS9203F	6 7/32	19/32	26.70	ZP9203F	6	23/32	22.80	3	8 1/4	2 5/8	11 1/4	3 11/32	4 1/2	5/8	1 1/8	3 3/8	1 1/4
	55.00	*ZPS9055MMF*	*157.94*	*15.09*	*12.10*	*ZP9055MMF*	*152.40*	*18.26*	*10.30*	*76.20*	*209.55*	*66.68*	*285.75*	*84.93*	*114.30*	*16.00*	*28.58*	*85.73*	*31.75*
9	2 7/16	ZPS9207F	7 5/16	19/32	41.80	ZP9207F	7 1/16	5/8	35.40	3 1/2	9 3/4	2 3/4	13	3 3/4	5	3/4	1 3/8	3 5/8	1 1/2
	2 1/2	ZPS9208F			41.70	ZP9208F			34.60										
10	2 11/16	ZPS9211F	8 3/8	11/16	56.00	ZP9211F	8 1/8	13/16	51.20	4	11 1/2	3	15	4 1/4	5	3/4	1 1/2	4 13/32	1 1/2
	2 15/16	ZPS9215F			55.00	ZP9215F			50.00										
	75.00	*ZPS9075MMF*	*212.73*	*17.47*	*25.00*	*ZP9075MMF*	*206.38*	*20.64*	*23.00*	*101.60*	*292.10*	*76.20*	*381.00*	*107.95*	*127.00*	*19.00*	*38.10*	*111.92*	*38.10*
11	3 3/16	ZPS9303F	10 1/4	13/16	95.00	ZP9303F	9 7/8	15/16	83.00	5	13 1/4	3 1/2	16 3/4	5	6	7/8	1 1/2	5 3/16	1 1/2
	3 7/16	ZPS9307F			93.00	ZP9307F			81.00										
	80.00	*ZPS9080MMF*	*260.35*	*20.64*	*42.00*	*ZP9080MMF*	*250.83*	*23.81*	*36.70*	*127.00*	*336.55*	*88.90*	*425.45*	*127.00*	*152.40*	*22.00*	*38.10*	*131.76*	*336.55*
12	3 11/16	ZPS9311YF	11 5/8	29/32	121.00	ZP9311YF	11 1/4	1 1/32	110.00	5 3/4	14 3/4	4	18 1/2	5 17/32	6 3/4	1	1 3/4	5 23/32	1 13/16
	3 15/16	ZPS9315YF			119.00	ZP9315YF			108.00										
	4	ZPS9400YF			118.00	ZP9400YF			107.00										
	100.00	*ZPS9100MMF*	*295.28*	*23.01*	*53.00*	*ZP9100MMF*	*285.75*	*23.01*	*49.00*	*146.05*	*374.65*	*101.60*	*469.90*	*140.49*	*171.45*	*25.00*	*44.45*	*145.26*	*46.04*
13	4 3/16	ZPS9403F	13 1/8	29/32	204.00	ZP9403F	12 1/2	1 1/8	174.00	6 1/8	16	4 1/4	20 1/4	6 3/4	7 1/2	1 1/8	1 7/8	6 1/8	2
	4 7/16	ZPS9407F			202.00	ZP9407F			168.00										
14	4 15/16	ZPS9415F	14 3/8	1 5/32	222.00	ZP9415F	14	1 1/8	202.00	6 11/16	18 5/16	3 11/16	22	7 1/16	6 1/4	1 1/8	2	7 3/32	2 1/16
	5	ZPS9500F			220.00	ZP9500F			201.00										
15	5 3/16	ZPS9503F	15 3/32	1 3/8	273.00	ZP9503F	14 3/4	1 5/16	254.00	7 1/16	20 1/2	4 3/16	24 3/4	7 5/16	6 3/4	1 1/8	2 1/8	8 1/16	2 1/16
	5 7/16	ZPS9507F		1 3/4	269.00	ZP9507F		1 11/16	250.00										
16	5 15/16	ZPS9515F	16 3/4	1 3/4	350.00	ZP9515F	16 5/16	1 11/16	328.00	7 7/8	23	4 7/16	28	7 3/4	7 1/2	1 1/4	2 3/8	9 1/16	2 5/16
	6	ZPS9600F			349.00	ZP9600F			327.00										
	6 7/16	ZPS9607F	16 3/4	1 3/4	342.00	ZP9607F	16 5/16	1 11/16	320.00	7 7/8	23	4 7/16	28	7 3/4	7 1/2	1 1/4	2 3/8	9 1/16	2 5/16

Additional Notes

- Please call 1-866-REXNORD for availability
- Lubrication fitting tap size: for size code 7 thru 11, 1/8" PT: for all other size codes, 1/4" PT
- Base to centerline tolerance, +/-.005 in *(+/-0.13 mm)*
- Expansion - size code 7 thru 8 is 3/8", size code 9 thru 11 is 1/2" & size code 12 thru 16 is 3/4"
- Seals - To specify G, K or M seal, replace "Z" in part number with "G", "K" or "M"
- "K" seals only available in size codes 7 thru 11
- "G" seals available in size codes 3 thru 13
- Auxiliary end caps - available in all sizes
- For the Selection Guide, Load Ratings and Speed Limits, see the Spherical Roller Bearings Engineering section on pages 15 - 27.
- Note: Dimensions subject to change. Certified dimensions of ordered material furnished on request.

ZEP2000, ZEPS2000

Interchange: *EP2BS2, P2BE, EP4BS2, P4BE, (F)SYE, USRBE5000, (E)RPBA, QAP, QAPR, EP2BTRB, EP4BTRB*

Photo Shows a 2-Bolt Spherical Roller Bearing Pillow Block Unit

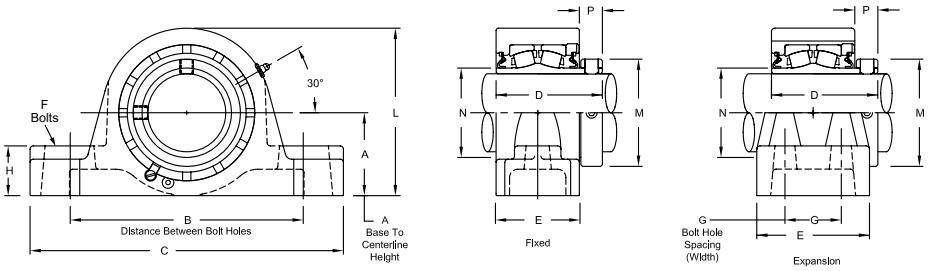

Product Features

- Corrosion-resistant powder coating
- Cast iron housing
- Misalignment capabilities - total of 4°
- Broad range of sealing options
- Factory set clearance & lubrication
- Precision ground & superfinished raceways
- Hardened spring locking collar
- Field interchangeable seals
- See Features and Benefits for additional info on pages 10 - 13.

Bearing Dimensions

Size Code	Shaft Diameter	Expansion Part Number	Fixed Part Number	A Base to Centerline Height	B Distance Between Bolt Holes Min.	B Distance Between Bolt Holes Max.	G Bolt Hole Spacing (Width)	C	D	E	F Bolts	H	L	M	N	P	Approx. Weight
Two-Bolt Pillow Block																	
3	1 1/8	-	ZEP2102	1 1/2	4 7/16	5	-	6 3/8	2 11/16	2 1/8	1/2	7/8	3 1/4	1 31/32	1 17/32	9/16	5.80
	1 3/16	-	ZEP2103														
	1 1/4	-	ZEP2104														5.70
	30.00	-	*ZEP2030MM*	*38.10*	*112.71*	*127.00*	-	*161.93*	*68.26*	*53.98*	*13.00*	*22.23*	*82.55*	*50.00*	*38.890*	*14.29*	*2.60*
4	1 7/16	ZEPS2107	ZEP2107	1 7/8	4 3/4	6	-	7 3/8	2 7/8	2 1/4	1/2	1 1/8	3 7/8	2 5/16	1 3/4	11/16	6.90
	1 1/2	-	ZEP2108	2 1/8	5 1/4	6 1/2		7 7/8				1 1/4	4 3/8				9.50
	35.00	*ZEPS2035MM*	*ZEP2035MM*	*47.63*	*120.65*	*152.40*	-	*187.33*	*73.02*	*57.15*	*13.00*	*28.58*	*98.43*	*58.74*	*44.450*	*17.46*	*3.10*
5	1 11/16	ZEPS2111	ZEP2111	2 1/8	5 1/4	6 1/2	-	7 7/8	3 1/8	2 1/2	1/2	1 1/4	4 3/8	2 19/32	2 1/32	11/16	9.90
	1 3/4	-	ZEP2112	2 1/4	6 1/16	7 1/4		8 7/8			5/8	1 5/16	4 9/16				11.80
	40.00	*ZEPS2040MM*	*ZEP2040MM*	*53.98*	*133.35*	*165.10*	-	*200.03*	*79.38*	*63.50*	*13.00*	*31.75*	*111.13*	*65.88*	*51.590*	*17.46*	*4.50*
	45.00	*ZEPS2045MM*	*ZEP2045MM*	*57.15*	*153.99*	*184.15*		*225.43*			*16.00*	*33.34*	*115.89*				*5.40*
6	1 15/16	ZEPS2115	ZEP2115	2 1/4	6 1/16	7 1/4	-	8 7/8	3 1/8	2 1/2	5/8	1 5/16	4 9/16	2 7/8	2 5/16	11/16	11.50
	2	ZEPS2200	ZEP2200														11.40
	50.00	*ZEPS2050MM*	*ZEP2050MM*	*57.15*	*153.99*	*184.15*	-	*225.43*	*79.38*	*63.50*	*16.00*	*33.34*	*115.89*	*73.03*	*58.740*	*17.46*	*5.20*
7	2 3/16	ZEPS2203	ZEP2203	2 1/2	6 9/16	8	-	9 5/8	3 5/16	2 9/16	5/8	1 1/2	5	3 1/4	2 5/8	13/16	14.80
	2 1/4	-	ZEP2204	2 3/4	6 15/16	8 3/4		10 1/2				1 5/8	5 7/16			7/8	18.60
	55.00	*ZEPS2055MM*	*ZEP2055MM*	*63.50*	*166.69*	*203.20*	-	*244.48*	*84.14*	*65.09*	*16.00*	*38.10*	*127.00*	*82.60*	*66.680*	*20.64*	*6.70*
8	2 3/8	ZEPS2206	ZEP2206	2 3/4	6 15/16	8 3/4	-	10 1/2	3 1/2	2 11/16	5/8	1 5/8	5 1/2	3 9/16	2 29/32	7/8	18.30
	2 7/16	ZEPS2207	ZEP2207														18.20
	2 1/2	ZEPS2208	ZEP2208														17.90
	60.00	*ZEPS2060MM*	*ZEP2060MM*	*69.85*	*176.21*	*222.25*	-	*266.70*	*88.90*	*68.26*	*16.00*	*41.28*	*139.70*	*90.50*	*73.820*	*22.23*	*8.30*
	65.00	*ZEPS2065MM*	*ZEP2065MM*														*8.10*
9	2 11/16	ZEPS2211	ZEP2211	3 1/8	7 13/16	9 3/4	-	11 13/16	4	3 3/16	3/4	1 7/8	6 5/16	4 1/16	3 3/8	7/8	29.30
	2 3/4	ZEPS2212	ZEP2212														28.80
	2 15/16	ZEPS2215	ZEP2215														27.70
	3	ZEPS2300	ZEP2300														27.50
	70.00	*ZEPS2070MM*	*ZEP2070MM*	*79.38*	*198.44*	*247.65*	-	*300.04*	*101.60*	*80.96*	*19.00*	*47.63*	*160.34*	*103.20*	*85.730*	*22.23*	*13.00*
	75.00	*ZEPS2075MM*	*ZEP2075MM*														*12.60*
10	3 3/16	ZEPS2303	ZEP2303	3 3/4	9 5/16	11 5/16	-	13 13/16	4 3/8	3 1/2	7/8	2 1/4	7 1/2	4 29/32	3 31/32	15/16	44.50
	3 7/16	ZEPS2307	ZEP2307														42.50
	3 1/2	ZEPS2308	ZEP2308														42.00
	80.00	*ZEPS2080MM*	*ZEP2080MM*	*95.25*	*236.54*	*287.34*	-	*350.84*	*111.13*	*88.90*	*22.00*	*57.15*	*190.50*	*124.62*	*100.790*	*23.81*	*20.40*
	85.00	*ZEPS2085MM*	*ZEP2085MM*														*19.40*
	90.00	*ZEPS2090MM*	*ZEP2090MM*														*18.90*

Continued...

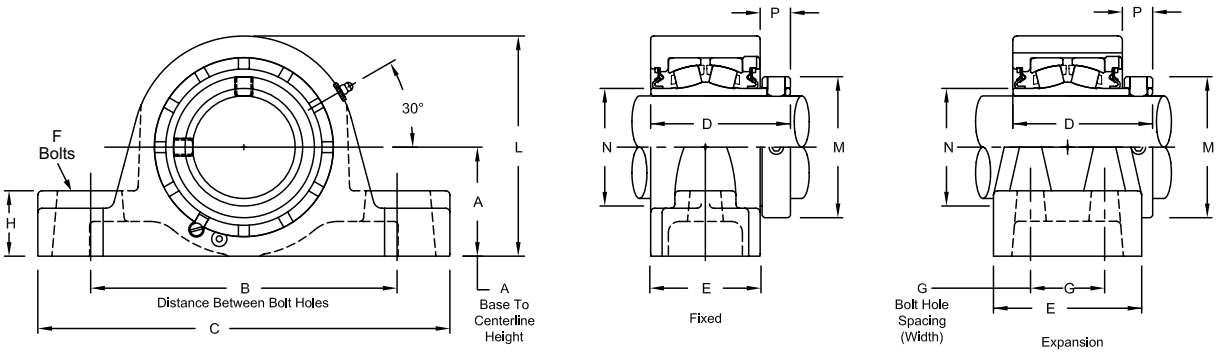

Continued...

Bearing Dimensions

Size Code	Shaft Diameter	Expansion Part Number	Fixed Part Number	A Base to Centerline Height	B Distance Between Bolt Holes Min.	B Distance Between Bolt Holes Max.	G Bolt Hole Spacing (Width)	C	D	E	F Bolts	H	L	M	N	P	Approx. Weight
Four-Bolt Pillow Block																	
8	2 3/8	ZEPS2206F	ZEP2206F	2 3/4	6 15/16	8 3/4	1 7/8	10 1/2	3 1/2	3 5/8	5/8	1 5/8	5 1/2	3 9/16	2 29/32	7/8	18.40
	2 7/16	ZEPS2207F	ZEP2207F														18.30
	2 1/2	ZEPS2208F	ZEP2208F														18.00
	60.00	*ZEPS2060MMF*	*ZEP2060MMF*	*69.85*	*176.21*	*222.25*	*47.63*	*266.70*	*88.90*	*92.08*	*16.00*	*41.28*	*139.70*	*90.50*	*73.820*	*22.23*	*8.40*
	65.00	*ZEPS2065MMF*	*ZEP2065MMF*														*8.20*
9	2 11/16	ZEPS2211F	ZEP2211F	3 1/8	7 13/16	9 7/8	2 1/8	11 13/16	4	4 1/4	5/8	1 7/8	6 5/16	4 1/16	3 3/8	7/8	28.50
	2 3/4	ZEPS2212F	ZEP2212F														28.30
	2 15/16	ZEPS2215F	ZEP2215F														27.30
	3	ZEPS2300F	ZEP2300F														27.00
	70.00	*ZEPS2070MMF*	*ZEP2070MMF*	*79.38*	*198.44*	*250.83*	*53.98*	*300.04*	*101.60*	*107.95*	*16.00*	*47.63*	*160.34*	*103.20*	*85.730*	*22.23*	*12.90*
	75.00	*ZEPS2075MMF*	*ZEP2075MMF*														*12.50*
10	3 3/16	ZEPS2303F	ZEP2303F	3 3/4	9 5/16	11 5/16	2 3/8	13 13/16	4 3/8	4 3/4	3/4	2 1/4	7 1/2	4 29/32	3 31/32	15/16	45.00
	3 7/16	ZEPS2307F	ZEP2307F														43.00
	3 1/2	ZEPS2308F	ZEP2308F														42.50
	80.00	*ZEPS2080MMF*	*ZEP2080MMF*	*95.25*	*236.54*	*287.34*	*60.33*	*350.84*	*111.13*	*120.65*	*19.00*	*57.15*	*190.50*	*124.62*	*100.790*	*23.81*	*20.30*
	85.00	*ZEPS2085MMF*	*ZEP2085MMF*														*19.50*
	90.00	*ZEPS2090MMF*	*ZEP2090MMF*														*19.00*
11	3 11/16	ZEPS2311F	ZEP2311F	4 1/4	12	13	2 1/4	15 1/4	5 1/16	4 1/2	3/4	2 5/8	8 5/8	5 5/8	4 9/16	1 1/32	63.00
	3 15/16	ZEPS2315F	ZEP2315F														61.00
	4	ZEPS2400F	ZEP2400F														60.00
	100.00	*ZEPS2100MMF*	*ZEP2100MMF*	*107.95*	*304.80*	*330.20*	*57.15*	*387.35*	*128.59*	*114.30*	*19.00*	*66.68*	*219.08*	*142.90*	*115.890*	*26.19*	*27.70*

Additional Notes

Please call 1-866-REXNORD for availability
Metric bore sizes available, see the Rex Interchangeability guide
Lubrication fitting tap size, 1/8" PT
Base to centerline tolerance, +/-.005 in *(+/-0.13 mm)*
Bore size = nominal shaft size +.001 in/-.000 in *(+0.03 mm/-0.00 mm)*
Seals - To specify G, K or M seal, replace "Z" in part number with "G", "K" or "M"
Auxiliary end caps - available in all size codes except for size code 3 and all expansion units

For the Selection Guide, Load Ratings and Speed Limits, see the Spherical Roller Bearings Engineering section on pages 15 - 27.
Note: Dimensions subject to change. Certified dimensions of ordered material furnished on request.

ZEP3000, ZEPS3000

Interchange: *QMP, QMPR*

Photo Shows a 2-Bolt Spherical Roller Bearing Pillow Block Unit

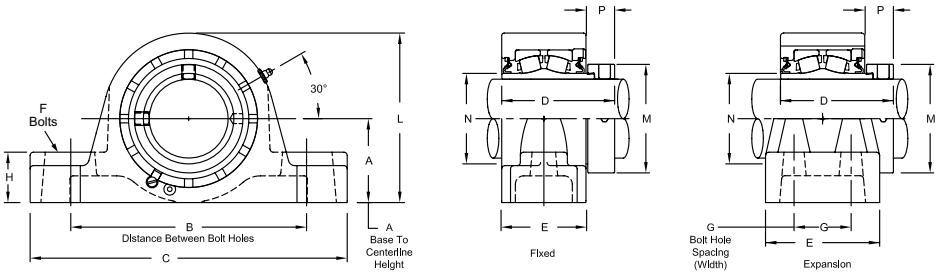

Product Features

- Corrosion-resistant powder coating
- Cast iron housing
- Misalignment capabilities - total of 4°
- Broad range of sealing options
- Factory set clearance & lubrication
- Precision ground & superfinished raceways
- Eccentric locking collar
- Field interchangeable seals
- See Features and Benefits for additional info on pages 10 - 13.

Bearing Dimensions

Size Code	Shaft Diameter	Expansion Part Number	Fixed Part Number	A Base to Centerline Height	B Min. Distance Between Bolt Holes	B Max. Distance Between Bolt Holes	G Bolt Hole Spacing (Width)	C	D	E	F Bolts	H	L	M	N	P	Approx. Weight
Two-Bolt Pillow Block																	
4	1 7/16	ZEPS3107	ZEP3107	1 7/8	4 3/4	6	-	7 3/8	2 59/64	2 1/4	1/2	1 1/8	3 7/8	2 5/16	1 3/4	25/32	7.10
5	1 11/16	ZEPS3111	ZEP3111	2 1/8	5 1/4	6 1/2	-	7 7/8	3 3/16	2 1/2	1/2	1 1/4	4 3/8	2 5/8	2 1/32	3/4	10.10
6	1 15/16	ZEPS3115	ZEP3115	2 1/4	6 1/16	7 1/4	-	8 7/8	3 9/32	2 1/2	5/8	1 5/16	4 9/16	2 3/4	2 5/16	27/32	11.70
7	2 3/16	ZEPS3203	ZEP3203	2 1/2	6 9/16	8	-	9 5/8	3 1/2	2 9/16	5/8	1 1/2	5	3 1/4	2 5/8	31/32	15.10
8	2 7/16	ZEPS3207	ZEP3207	2 3/4	6 15/16	8 3/4	-	10 1/2	3 21/32	2 11/16	5/8	1 5/8	5 1/2	3 9/16	2 29/32	1 1/64	18.40
	2 1/2	ZEPS3208	ZEP3208														18.10
9	2 11/16	ZEPS3211	ZEP3211	3 1/8	7 13/16	9 3/4	-	11 13/16	4 13/64	3 3/16	3/4	1 7/8	6 5/16	4 1/16	3 3/8	1 1/64	29.50
	2 15/16	ZEPS3215	ZEP3215														28.10
10	3 7/16	ZEPS3307	ZEP3307	3 3/4	9 5/16	11 5/16	-	13 13/16	4 37/64	3 1/2	7/8	2 1/4	7 1/2	4 15/16	3 31/32	1 9/64	43.10
	3 1/2	ZEPS3308	ZEP3308														42.20
Four-Bolt Pillow Block																	
8	2 7/16	ZEPS3207F	ZEP3207F	2 3/4	6 15/16	8 3/4	1 7/8	10 1/2	3 21/32	3 5/8	5/8	1 5/8	5 1/2	3 9/16	2 29/32	1 1/64	18.50
	2 1/2	ZEPS3208F	ZEP3208F														18.20
9	2 11/16	ZEPS3211F	ZEP3211F	3 1/8	7 13/16	9 7/8	2 1/8	11 13/16	4 13/64	4 1/4	5/8	1 7/8	6 5/16	4 1/16	3 3/8	1 1/64	28.70
	2 15/16	ZEPS3215F	ZEP3215F														27.70
10	3 7/16	ZEPS3307F	ZEP3307F	3 3/4	9 5/16	11 5/16	2 3/8	13 13/16	4 37/64	4 3/4	3/4	2 1/4	7 1/2	4 15/16	3 31/32	1 9/64	43.60
	3 1/2	ZEPS3308F	ZEP3308F														42.70
11	3 15/16	ZEPS3315F	ZEP3315F	4 1/4	12	13	2 1/4	15 1/4	5 3/16	4 1/2	3/4	2 5/8	8 5/8	5 5/8	4 9/16	1 1/16	61.00

Additional Notes

- Please call 1-866-REXNORD for availability
- Lubrication fitting tap size, 1/8" PT
- Base to centerline tolerance, +/-.005 in *(+/-0.13 mm)*
- Bore size = nominal shaft size +.001 in/-.000 in *(+0.03 mm/-0.00 mm)*
- Seals - To specify G, K or M seal, replace "Z" in part number with "G", "K" or "M"
- Auxiliary end caps - available in all size codes, except expansion units
- For the Selection Guide, Load Ratings and Speed Limits, see the Spherical Roller Bearings Engineering section on pages 15 - 27.

Note: Dimensions subject to change. Certified dimensions of ordered material furnished on request.

ZEP5000, ZEPS5000

Interchange: *(E)RPB, QAAP(F), QAAPR*

Photo Shows a 2-Bolt Spherical Roller Bearing Pillow Block Unit

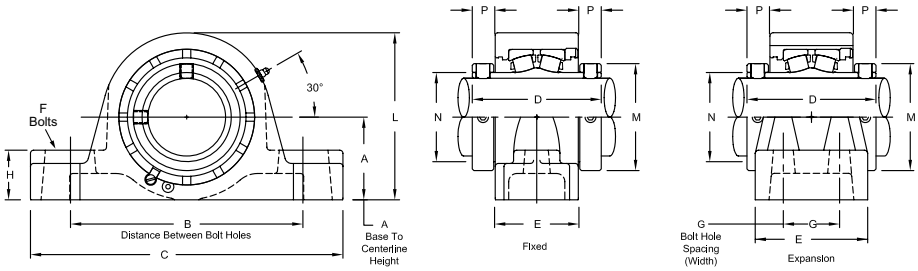

Product Features

- Corrosion-resistant powder coating
- Cast iron housing
- Misalignment capabilities - total of 4°
- Broad range of sealing options
- Factory set clearance & lubrication
- Precision ground & superfinished raceways
- Two hardened spring locking collars
- Field interchangeable seals
- See Features and Benefits for additional info on pages 10 - 13.

Bearing Dimensions

Size Code	Shaft Diameter	Expansion Part Number	Fixed Part Number	A Base to Centerline Height	B Distance Between Bolt Holes Min.	B Distance Between Bolt Holes Max.	G Bolt Hole Spacing (Width)	C	D	E	F Bolts	H	L	M	N	P	Approx. Weight
Two-Bolt Pillow Block																	
4	1 7/16	ZEPS5107	ZEP5107	1 7/8	4 3/4	6	-	7 3/8	3 9/16	2 1/4	1/2	1 1/8	3 7/8	2 5/16	1 3/4	11/16	7.40
	35.00	*ZEPS5035MM*	*ZEP5035MM*	*47.63*	*120.65*	*152.40*	*-*	*187.33*	*90.49*	*57.15*	*13.00*	*28.58*	*98.43*	*58.74*	*44.450*	*17.46*	*3.40*
5	1 1/2	ZEPS5108	ZEP5108	2 1/8	5 1/4	6 1/2	-	7 7/8	3 13/16	2 1/2	1/2	1 1/4	4 3/8	2 19/32	2 1/32	11/16	10.90
	1 11/16	ZEPS5111	ZEP5111														10.50
	40.00	*ZEPS5040MM*	*ZEP5040MM*	*53.98*	*133.35*	*165.10*	*-*	*200.03*	*96.84*	*63.50*	*13.00*	*31.75*	*111.13*	*65.88*	*51.590*	*17.46*	*4.90*
	45.00	*ZEPS5045MM*	*ZEP5045MM*														
6	1 15/16	ZEPS5115	ZEP5115	2 1/4	6 1/16	7 1/4	-	8 7/8	3 13/16	2 1/2	5/8	1 5/16	4 9/16	2 7/8	2 5/16	11/16	12.10
	2	ZEPS8200	ZEP8200														16.50
	50.00	*ZEPS5050MM*	*ZEP5050MM*	*57.15*	*153.99*	*184.15*	*-*	*225.43*	*96.84*	*63.50*	*16.00*	*33.34*	*115.89*	*73.03*	*58.740*	*17.46*	*5.50*
7	2	ZEPS5200	ZEP5200	2 1/2	6 9/16	8	-	9 5/8	4 1/8	2 9/16	5/8	1 1/2	5	3 1/4	2 5/8	13/16	16.50
	2 3/16	ZEPS5203	ZEP5203														15.90
	55.00	*ZEPS5055MM*	*ZEP5055MM*	*63.50*	*166.69*	*203.20*	*-*	*244.48*	*104.78*	*65.09*	*16.00*	*38.10*	*127.00*	*82.60*	*66.680*	*20.64*	*7.20*
8	2 7/16	ZEPS5207	ZEP5207	2 3/4	6 15/16	8 3/4	-	10 1/2	4 3/8	2 11/16	5/8	1 5/8	5 1/2	3 9/16	2 29/32	7/8	19.30
	60.00	*ZEPS5060MM*	*ZEP5060MM*	*69.85*	*176.21*	*222.25*	*-*	*266.70*	*111.13*	*68.26*	*16.00*	*41.28*	*139.70*	*90.50*	*73.820*	*22.23*	*8.70*
	65.00	*ZEPS5065MM*	*ZEP5065MM*														*8.60*
9	2 1/2	ZEPS5208	ZEP5208	3 1/8	7 13/16	9 3/4	-	11 13/16	4 7/8	3 3/16	3/4	1 7/8	6 5/16	4 1/16	3 3/8	7/8	31.50
	2 11/16	ZEPS5211	ZEP5211														30.50
	2 3/4	ZEPS5212	ZEP5212														30.20
	2 15/16	ZEPS5215	ZEP5215														30.10
	70.00	*ZEPS5070MM*	*ZEP5070MM*	*79.38*	*198.44*	*247.65*	*-*	*300.04*	*123.83*	*80.96*	*19.00*	*47.63*	*160.34*	*103.20*	*85.730*	*22.23*	*13.70*
	75.00	*ZEPS5075MM*	*ZEP5075MM*														*13.50*
10	3 3/16	ZEPS5303	ZEP5303	3 3/4	9 5/16	11 5/16	-	13 13/16	5 5/16	3 1/2	7/8	2 1/4	7 1/2	4 29/32	3 31/32	15/16	47.10
	3 7/16	ZEPS5307	ZEP5307														44.70
	80.00	*ZEPS5080MM*	*ZEP5080MM*	*95.25*	*236.54*	*287.34*	*-*	*350.84*	*134.94*	*88.90*	*22.00*	*57.15*	*190.50*	*124.62*	*100.790*	*23.81*	*21.30*
	85.00	*ZEPS5085MM*	*ZEP5085MM*														*20.30*
	90.00	*ZEPS5090MM*	*ZEP5090MM*														*20.00*
Four-Bolt Pillow Block																	
8	2 7/16	ZEPS5207F	ZEP5207F	2 3/4	6 15/16	8 3/4	1 7/8	10 1/2	4 3/8	3 5/8	5/8	1 5/8	5 1/2	3 9/16	2 29/32	7/8	19.40
	60.00	*ZEPS5060MMF*	*ZEP5060MMF*	*69.85*	*176.21*	*222.25*	*47.63*	*266.70*	*111.13*	*92.08*	*16.00*	*41.28*	*139.70*	*90.50*	*73.820*	*22.23*	*8.80*
	65.00	*ZEPS5065MMF*	*ZEP5065MMF*														*8.70*
9	2 1/2	ZEPS5208F	ZEP5208F	3 1/8	7 13/16	9 7/8	2 1/8	11 13/16	4 7/8	4 1/4	5/8	1 7/8	6 5/16	4 1/16	3 3/8	7/8	31.00
	2 11/16	ZEPS5211F	ZEP5211F														30.00
	2 3/4	ZEPS5212F	ZEP5212F														29.80

Continued...

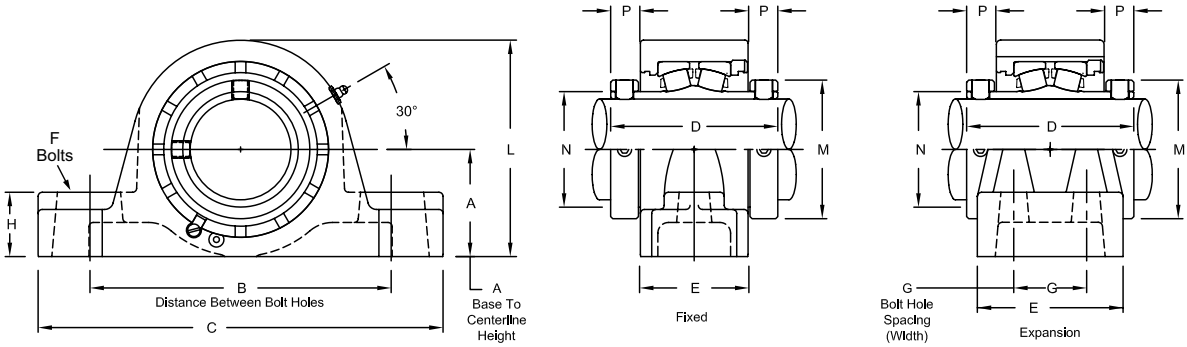

Continued...

Bearing Dimensions

Size Code	Shaft Diameter	Expansion Part Number	Fixed Part Number	A Base to Centerline Height	B Distance Between Bolt Holes Min.	B Distance Between Bolt Holes Max.	G Bolt Hole Spacing (Width)	C	D	E	F Bolts	H	L	M	N	P	Approx. Weight
Four-Bolt Pillow Block (continued)																	
9	2 15/16	ZEPS5215F	ZEP5215F	3 1/8	7 13/16	9 7/8	2 1/8	11 13/16	4 7/8	4 1/4	5/8	1 7/8	6 5/16	4 1/16	3 3/8	7/8	29.70
	70.00	*ZEPS5070MMF*	*ZEP5070MMF*	*79.38*	*198.44*	*250.83*	*53.98*	*300.04*	*123.83*	*107.95*	*16.00*	*47.63*	*160.34*	*103.20*	*85.730*	*22.23*	*13.40*
	75.00	*ZEPS5075MMF*	*ZEP5075MMF*														*13.20*
10	3 3/16	ZEPS5303F	ZEP5303F	3 3/4	9 5/16	11 5/16	2 3/8	13 13/16	5 5/16	4 3/4	3/4	2 1/4	7 1/2	4 29/32	3 31/32	15/16	47.60
	3 7/16	ZEPS5307F	ZEP5307F														45.20
	80.00	*ZEPS5080MMF*	*ZEP5080MMF*	*95.25*	*236.54*	*287.34*	*60.33*	*350.84*	*134.94*	*120.65*	*19.00*	*57.15*	*190.50*	*124.62*	*100.790*	*23.81*	*21.60*
	85.00	*ZEPS5085MMF*	*ZEP5085MMF*														*20.50*
	90.00	*ZEPS5090MMF*	*ZEP5090MMF*														
11	3 11/16	ZEPS5311F	ZEP5311F	4 1/4	12	13	2 1/4	15 1/4	6 1/8	4 1/2	3/4	2 5/8	8 5/8	5 5/8	4 9/16	1 1/32	65.50
	3 15/16	ZEPS5315F	ZEP5315F														64.80
	4	ZEPS5400F	ZEP5400F														63.50
	100.00	*ZEPS5100MMF*	*ZEP5100MMF*	*107.95*	*304.80*	*330.20*	*57.15*	*387.35*	*155.58*	*114.30*	*19.00*	*66.68*	*219.08*	*142.90*	*115.890*	*26.19*	*30.00*
12	4 3/16	ZEPS5403YF	ZEP5403YF	4 3/4	12 7/8	14 1/8	2 1/2	16 1/2	6 1/4	4 5/8	3/4	2 3/4	9 3/8	6 3/16	5 1/32	1 1/16	81.00
	4 7/16	ZEPS5407YF	ZEP5407YF														78.00
	4 1/2	ZEPS5408YF	ZEP5408YF														76.00
	110.00	*ZEPS5110MMF*	*ZEP5110MMF*	*120.65*	*327.03*	*358.78*	*63.50*	*419.10*	*158.75*	*117.48*	*19.00*	*69.85*	*238.13*	*157.16*	*127.790*	*26.99*	*35.40*
	115.00	*ZEPS5115MMF*	*ZEP5115MMF*														*34.50*
13	4 15/16	ZEPS5415F	ZEP5415F	5 1/2	14 7/8	16 1/8	2 3/4	18 1/2	7 7/8	5 9/16	7/8	3	11 1/8	7 1/16	5 3/4	1 5/32	150.00
	5	ZEPS5500F	ZEP5500F														147.00
	125.00	*ZEPS5125MMF*	*ZEP5125MMF*	*139.70*	*377.83*	*409.58*	*69.85*	*469.90*	*200.03*	*141.29*	*22.00*	*76.20*	*282.58*	*179.39*	*146.050*	*29.37*	*68.00*
	130.00	*ZEPS5130MMF*	*ZEP5130MMF*														*66.70*

Additional Notes

Please call 1-866-REXNORD for availability

Metric bore sizes available, see the Rex Interchangeability guide

Lubrication fitting tap size: for size code 4 thru 11, 1/8" PT: for all other size codes, 1/4" PT

Base to centerline tolerance, +/-.005 in *(+/-0.13 mm)*

Bore size = nominal shaft size +.001 in/-.000 in *(+0.03 mm/-0.00 mm)*

Seals - To specify G, K or M seal, replace "Z" in part number with "G", "K" or "M"

"K" seals only available in size codes 4 thru 11

Auxiliary end caps - available in all size codes, expect expansion units

For the Selection Guide, Load Ratings and Speed Limits, see the Spherical Roller Bearings Engineering section on pages 15 - 27.

Note: Dimensions subject to change. Certified dimensions of ordered material furnished on request.

ZEP6000, ZEPS6000

Interchange: *EP2BIP, EP4BIP, (F)SYE-N, USRBE5000A, QVVP, QVVPR, DVP*

Photo Shows a 2-Bolt Spherical Roller Bearing Pillow Block Unit

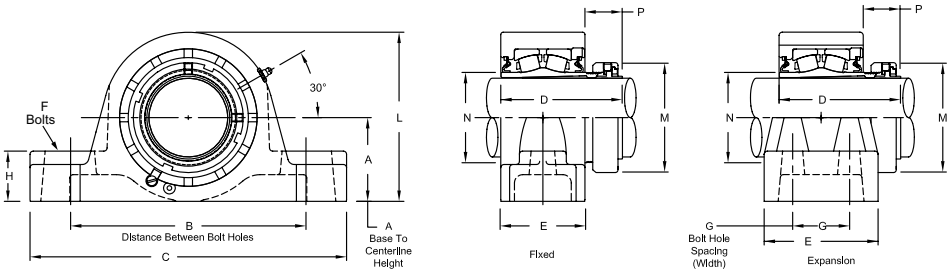

Product Features

- Spyglass Optical Strain Sensor (OSS) Technology
- Positive locking system
- Tapered adapter sleeve
- Corrosion-resistant powder coating
- Cast iron housing
- Misalignment capabilities - total of 4°
- Broad range of sealing options
- Factory set clearance & lubrication
- Precision ground & superfinished raceways
- See Features and Benefits for additional info on pages 10 - 13.

Bearing Dimensions

Size Code	Shaft Diameter	Expansion Part Number	Fixed Part Number	A Base to Centerline Height	B Distance Between Bolt Holes Min.	B Distance Between Bolt Holes Max.	G Bolt Hole Spacing (Width)	C	D	E	F Bolts	H	L	M	N	P	Approx. Weight
Two-Bolt Pillow Block																	
4	1 7/16	ZEPS6107	ZEP6107	1 7/8	4 3/4	6	-	7 3/8	3 21/64	2 1/4	1/2	1 1/8	3 7/8	2 25/64	1 3/4	1 9/64	6.90
5	1 11/16	ZEPS6111	ZEP6111	2 1/8	5 1/4	6 1/4	-	7 7/8	3 47/64	2 1/2		1 1/4	4 3/8	2 41/64	2 1/32	1 9/32	10.50
6	1 15/16	ZEPS6115	ZEP6115	2 1/4	6 1/16	7 1/4	-	8 7/8	3 41/64		5/8	1 5/16	4 9/16	2 55/64	2 5/16	1 1/8	12.10
	45.00	*ZEPS6045MM*	*ZEP6045MM*	*57.15*	*153.99*	*184.15*	*-*	*225.43*	*92.47*	*63.50*	*16.00*	*33.34*	*115.89*	*72.63*	*58.740*	*28.58*	*5.50*
7	2 3/16	ZEPS6203	ZEP6203	2 1/2	6 9/16	8	-	9 5/8	3 11/16	2 9/16	5/8	1 1/2	5	3 15/64	2 5/8	1 5/32	16.50
	55.00	*ZEPS6055MM*	*ZEP6055MM*	*63.50*	*166.69*	*203.20*	*-*	*244.48*	*93.66*	*65.09*	*16.00*	*38.10*	*127.00*	*82.15*	*66.680*	*29.37*	*7.20*
8	2 3/8	ZEPS6206	ZEP6206	2 3/4	6 15/16	8 3/4	-	10 1/2	4 1/16	2 11/16	5/8	1 5/8	5 1/2	3 19/32	2 29/32	1 27/64	19.30
	2 7/16	ZEPS6207	ZEP6207														18.50
	60.00	*ZEPS6060MM*	*ZEP6060MM*	*69.85*	*176.21*	*222.25*	*-*	*266.70*	*103.19*	*68.26*	*16.00*	*41.28*	*139.70*	*91.28*	*73.820*	*36.12*	*8.70*
9	2 11/16	ZEPS6211	ZEP6211	3 1/8	7 13/16	9 3/4	-	11 13/16	4 17/32	3 3/16	3/4	1 7/8	6 5/16	4 3/32	3 3/8	1 25/64	31.50
	2 3/4	ZEPS6212	ZEP6212														31.00
	2 15/16	ZEPS6215	ZEP6215														28.70
	70.00	*ZEPS6070MM*	*ZEP6070MM*	*79.38*	*198.44*	*247.65*	*-*	*300.04*	*115.09*	*80.96*	*19.00*	*47.63*	*160.34*	*103.98*	*85.730*	*35.32*	*13.70*
	75.00	*ZEPS6075MM*	*ZEP6075MM*														*13.50*
10	3 3/16	ZEPS6303	ZEP6303	3 3/4	9 5/16	11 5/16	-	13 13/16	5 1/32	3 1/2	7/8	2 1/4	7 1/2	4 61/64	3 31/32	1 19/32	47.10
	3 7/16	ZEPS6307	ZEP6307														44.70
	80.00	*ZEPS6080MM*	*ZEP6080MM*	*95.25*	*236.54*	*287.34*	*-*	*350.84*	*127.79*	*88.90*	*22.00*	*57.15*	*190.50*	*125.81*	*100.790*	*40.48*	*21.30*
Four-Bolt Pillow Block																	
8	2 3/8	ZEPS6206F	ZEP6206F	2 3/4	6 15/16	8 3/4	1 7/8	10 1/2	4 1/16	3 5/8	5/8	1 5/8	5 1/2	3 19/32	2 29/32	1 27/64	19.40
	2 7/16	ZEPS6207F	ZEP6207F														18.30
	60.00	*ZEPS6060MMF*	*ZEP6060MMF*	*69.85*	*176.21*	*222.25*	*47.63*	*266.70*	*103.19*	*92.08*	*16.00*	*41.28*	*139.70*	*91.28*	*73.820*	*36.12*	*8.80*
9	2 11/16	ZEPS6211F	ZEP6211F	3 1/8	7 13/16	9 7/8	2 1/8	11 13/16	4 17/32	4 1/4	5/8	1 7/8	6 5/16	4 3/32	3 3/8	1 25/64	31.00
	2 3/4	ZEPS6212F	ZEP6212F														30.50
	2 15/16	ZEPS6215F	ZEP6215F														28.20
	70.00	*ZEPS6070MMF*	*ZEP6070MMF*	*79.38*	*198.44*	*250.83*	*53.98*	*300.04*	*115.09*	*107.95*	*16.00*	*47.63*	*160.34*	*103.98*	*85.730*	*35.32*	*13.40*
	75.00	*ZEPS6075MMF*	*ZEP6075MMF*														*13.20*
10	3 3/16	ZEPS6303F	ZEP6303F	3 3/4	9 5/16	11 5/16	2 3/8	13 13/16	5 1/32	4 3/4	3/4	2 1/4	7 1/2	4 61/64	3 31/32	1 19/32	47.60
	3 7/16	ZEPS6307F	ZEP6307F														45.20
	80.00	*ZEPS6080MMF*	*ZEP6080MMF*	*95.25*	*236.54*	*287.34*	*60.33*	*350.84*	*127.79*	*120.65*	*19.00*	*57.15*	*190.50*	*125.81*	*100.790*	*40.48*	*21.60*
	85.00	*ZEPS6085MMF*	*ZEP6085MMF*														*20.50*
11	3 11/16	ZEPS6311F	ZEP6311F	4 1/4	12	13	2 1/4	15 1/4	5 25/32	4 1/2	3/4	2 5/8	8 5/8	5 43/64	4 9/16	1 47/64	65.50
	3 15/16	ZEPS6315F	ZEP6315F														64.80
	90.00	*ZEPS6090MMF*	*ZEP6090MMF*	*107.95*	*304.80*	*330.20*	*57.15*	*387.35*	*146.84*	*114.30*	*19.00*	*66.68*	*219.08*	*144.07*	*115.890*	*44.05*	*30.00*
	100.00	*ZEPS6100MMF*	*ZEP6100MMF*														
12	4 3/16	ZEPS6403YF	ZEP6403YF	4 3/4	12 7/8	14 1/8	2 1/2	16 1/2	6 1/4	4 5/8	3/4	2 3/4	9 3/8	6 1/16	5 1/32	1 7/8	81.00
	4 7/16	ZEPS6407YF	ZEP6407YF														78.00
	110.00	*ZEPS6110MMF*	*ZEP6110MMF*	*120.65*	*327.03*	*358.78*	*63.50*	*419.10*	*158.75*	*117.48*	*19.00*	*69.85*	*238.13*	*153.99*	*127.790*	*47.63*	*35.40*
13	4 15/16	ZEPS6415F	ZEP6415F	5 1/2	14 7/8	16 1/8	2 3/4	18 1/2	7 15/16	5 9/16	7/8	3	11 1/8	6 61/64	5 3/4	2 1/4	150.00
	125.00	*ZEPS6125MMF*	*ZEP6125MMF*	*139.70*	*377.83*	*409.58*	*69.85*	*469.90*	*201.61*	*141.29*	*22.00*	*76.20*	*282.58*	*176.61*	*146.050*	*57.15*	*68.00*

Additional Notes

Please call 1-866-REXNORD for availability
Metric bore sizes available, see the Rex Interchangeability guide
Lubrication fitting tap size: for size code 6 thru 11, 1/8" PT: for all other size codes, 1/4" PT
Base to centerline tolerance, +/-.005 in *(+/-0.13 mm)*
Seals - To specify G, K or M seal, replace "Z" in part number with "G", "K" or "M"

"K" seals only available in size codes 4 thru 11
Auxiliary end caps - available in all size codes, except expansion units
For the Selection Guide, Load Ratings and Speed Limits, see the Spherical Roller Bearings Engineering section on pages 15 - 27.

Note: Dimensions subject to change. Certified dimensions of ordered material furnished on request.

ZEP9000, ZEPS9000

Photo Shows a 2-Bolt Spherical Roller Bearing Pillow Block Unit

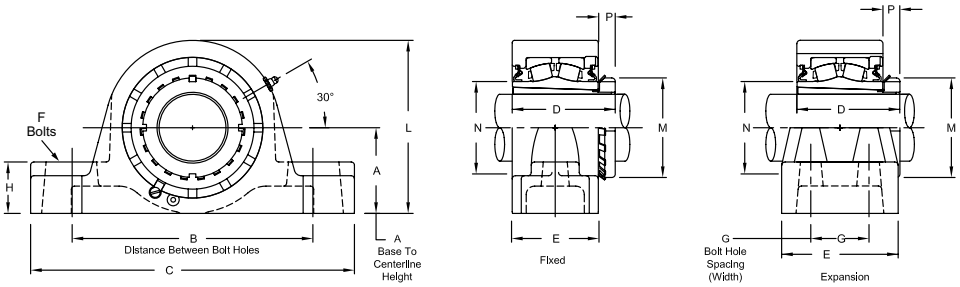

Product Features

- Corrosion-resistant powder coating
- Cast iron housing
- Misalignment capabilities - total of 4°
- Broad range of sealing options
- Factory set clearance & lubrication
- Precision ground & superfinished raceways
- Enhanced life mounting style
- Field interchangeable seals
- See Features and Benefits for additional info on pages 10 - 13.

Bearing Dimensions

Size Code	Shaft Diameter	Expansion Part Number	Fixed Part Number	A Base to Centerline Height	B Distance Between Bolt Holes Min.	B Distance Between Bolt Holes Max.	G Bolt Hole Spacing (Width)	C	D	E	F Bolts	H	L	M	N	P	Approx. Weight
Two-Bolt Pillow Block																	
7	1 15/16	ZEPS9115	ZEP9115	2 1/2	6 9/16	8	-	9 5/8	3 5/32	2 9/16	5/8	1 1/2	5	2 31/32	2 5/8	19/32	15.00
	2	ZEPS9200	ZEP9200														14.90
	45.00	*ZEPS9045MM*	*ZEP9045MM*	*63.50*	*166.69*	*203.20*	*-*	*244.48*	*80.17*	*65.09*	*16.00*	*38.10*	*127.00*	*75.40*	*66.680*	*15.08*	*6.80*
	50.00	*ZEPS9050MM*	*ZEP9050MM*														*6.60*
8	2 3/16	ZEPS9203	ZEP9203	2 3/4	6 15/16	8 3/4	-	10 1/2	3 11/32	2 11/16	5/8	1 5/8	5 1/2	3 3/8	2 29/32	23/32	18.60
	55.00	*ZEPS9055MM*	*ZEP9055MM*	*69.85*	*176.21*	*222.25*	*-*	*266.70*	*84.93*	*68.26*	*16.00*	*41.28*	*139.70*	*85.73*	*73.820*	*18.26*	*8.40*
9	2 7/16	ZEPS9207	ZEP9207	3 1/8	7 13/16	9 3/4	-	11 13/16	3 3/4	3 3/16	3/4	1 7/8	6 5/16	3 5/8	3 3/8	5/8	28.10
	2 1/2	ZEPS9208	ZEP9208														27.70
10	2 11/16	ZEPS9211	ZEP9211	3 3/4	9 5/16	11 5/16	-	13 13/16	4 1/4	3 1/2	7/8	2 1/4	7 1/2	4 13/32	3 31/32	13/16	45.70
	2 15/16	ZEPS9215	ZEP9215														44.50
	75.00	*ZEPS9075MM*	*ZEP9075MM*	*95.25*	*236.54*	*287.34*	*-*	*350.84*	*107.95*	*88.90*	*22.00*	*57.15*	*190.50*	*111.92*	*100.790*	*20.64*	*20.20*
Four-Bolt Pillow Block																	
8	2 3/16	ZEPS9203F	ZEP9203F	2 3/4	6 15/16	8 3/4	1 7/8	10 1/2	3 11/32	3 5/8	5/8	1 5/8	5 1/2	3 3/8	2 29/32	23/32	18.70
	55.00	*ZEPS9055MMF*	*ZEP9055MMF*	*69.85*	*176.21*	*222.25*	*47.63*	*266.70*	*84.93*	*92.08*	*16.00*	*41.28*	*139.70*	*85.73*	*73.820*	*18.26*	*8.50*
9	2 7/16	ZEPS9207F	ZEP9207F	3 1/8	7 13/16	9 7/8	2 1/8	11 13/16	3 3/4	4 1/4	5/8	1 7/8	6 5/16	3 5/8	3 3/8	5/8	27.60
	2 1/2	ZEPS9208F	ZEP9208F														27.20
10	2 11/16	ZEPS9211F	ZEP9211F	3 3/4	9 5/16	11 5/16	2 3/8	13 13/16	4 1/4	4 3/4	3/4	2 1/4	7 1/2	4 13/32	3 31/32	13/16	46.20
	2 15/16	ZEPS9215F	ZEP9215F														45.00
	75.00	*ZEPS9075MMF*	*ZEP9075MMF*	*95.25*	*236.54*	*287.34*	*60.33*	*350.84*	*107.95*	*120.65*	*19.00*	*57.15*	*190.50*	*111.92*	*100.790*	*20.64*	*20.40*
11	3 3/16	ZEPS9303F	ZEP9303F	4 1/4	12	13	2 1/4	15 1/4	5	4 1/2	3/4	2 5/8	8 5/8	5 3/16	4 9/16	15/16	70.00
	3 7/16	ZEPS9307F	ZEP9307F														68.00
	80.00	*ZEPS9080MMF*	*ZEP9080MMF*	*107.95*	*304.80*	*330.20*	*57.15*	*387.35*	*127.00*	*114.30*	*19.00*	*66.68*	*219.08*	*131.76*	*115.890*	*23.81*	*31.00*
12	3 11/16	ZEPS9311YF	ZEP9311YF	4 3/4	12 7/8	14 1/8	2 1/2	16 1/2	5 17/32	4 5/8	3/4	2 3/4	9 3/8	5 23/32	5 1/32	1 1/32	78.20
	3 15/16	ZEPS9315YF	ZEP9315YF														75.90
	4	ZEPS9400YF	ZEP9400YF														75.40
	100.00	*ZEPS9100MMF*	*ZEP9100MMF*	*120.65*	*327.03*	*358.78*	*63.50*	*419.10*	*140.49*	*117.48*	*19.00*	*69.85*	*238.13*	*145.26*	*127.790*	*26.19*	*34.40*
13	4 3/16	ZEPS9403F	ZEP9403F	5 1/2	14 7/8	16 1/8	2 3/4	18 1/2	6 3/4	5 9/16	7/8	3	11 1/8	6 1/8	5 3/4	1 1/8	150.00
	4 7/16	ZEPS9407F	ZEP9407F														148.00

Additional Notes

- Please call 1-866-REXNORD for availability
- Lubrication fitting tap size: for size code 7 thru 11, 1/8" PT: for all other size codes, 1/4" PT
- Base to centerline tolerance, +/-.005 in *(+/-0.13 mm)*
- Seals - To specify G, K or M seal, replace "Z" in part number with "G", "K" or "M"
- "K" seals only available in size codes 7 thru 11
- Auxiliary end caps - available in all size codes, except expansion units
- For the Selection Guide, Load Ratings and Speed Limits, see the Spherical Roller Bearings Engineering section on pages 15 - 27.
- Note: Dimensions subject to change. Certified dimensions of ordered material furnished on request.

ZB2000, ZBS2000

Interchange: *F4RS2, F4SS2, FYR, USFB5000, QAFY, QAFL*

Photo Shows a 4-Bolt Spherical Roller Bearing Flanged Unit

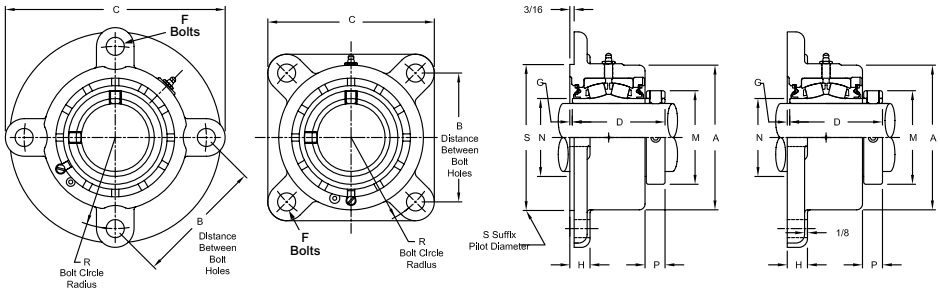

Product Features

- Corrosion-resistant powder coating
- Cast iron housing
- Misalignment capabilities - total of 4°
- Broad range of sealing options
- Factory set clearance & lubrication
- Precision ground & superfinished raceways
- Hardened spring locking collar
- Field interchangeable seals
- See Features and Benefits for additional info on pages 10 - 13.

Bearing Dimensions

Size Code	Shaft Diameter	Expansion Part Number	Expansion A	Expansion H	Fixed Part Number	Fixed A	Fixed H	B Distance Between Bolt Holes	R Bolt Circle Radius	C	D	F Bolts	G	M	N	P	S	Approx. Weight
3-Bolt																		
2	3/4	-	-	-	ZB2012	2 7/8	9/16	3 37/64	2 1/16	5 1/8	2 9/16	3/8	1/32	1 3/4	1 5/16	9/16	3	4.30
	15/16	-	-	-	ZB2015													4.20
	1	-	-	-	ZB2100													
	25.00	*-*	*-*	*-*	*ZB2025MM*	*73.03*	*14.29*	*90.88*	*52.39*	*130.18*	*65.09*	*10.00*	*0.79*	*44.45*	*33.340*	*14.29*	*76.200*	*1.90*
3	1 1/8	-	-	-	ZB2102	3 1/8	19/32	3 57/64	2 1/4	5 1/2	2 11/16	3/8	1/32	1 31/32	1 17/32	9/16	3 1/4	5.20
	1 3/16	-	-	-	ZB2103													5.10
	1 1/4	-	-	-	ZB2104													5.00
	30.00	*-*	*-*	*-*	*ZB2030MM*	*79.38*	*15.09*	*98.83*	*57.15*	*139.70*	*68.26*	*10.00*	*0.79*	*50.00*	*38.880*	*14.29*	*82.550*	*2.30*
4	1 7/16	ZBS2107	3 3/4	5/8	ZB2107	3 7/16	5/8	4 21/64	2 1/2	6 1/4	2 7/8	1/2	1/32	2 5/16	1 3/4	11/16	3 9/16	6.80
	1 1/2	ZBS2108			ZB2108													6.70
	35.00	*ZBS2035MM*	*95.25*	*15.88*	*ZB2035MM*	*87.31*	*15.88*	*109.93*	*63.50*	*158.75*	*73.02*	*13.00*	*0.79*	*58.74*	*44.450*	*17.46*	*90.490*	*3.10*
4-Bolt Round																		
5	1 11/16	ZBS2111	4 1/4	5/8	ZB2111	3 15/16	5/8	3 57/64	2 3/4	6 3/4	3 1/8	1/2	1/32	2 19/32	2 1/32	11/16	4 1/16	8.60
	1 3/4	ZBS2112			ZB2112													8.40
	40.00	*ZBS2040MM*	*107.95*	*15.88*	*ZB2040MM*	*100.01*	*15.88*	*98.83*	*69.85*	*171.45*	*79.38*	*13.00*	*0.79*	*65.88*	*51.580*	*17.46*	*103.190*	*4.00*
	45.00	*ZBS2045MM*			*ZB2045MM*													*8.40*
6	1 15/16	ZBS2115	4 1/2	11/16	ZB2115	4 1/4	11/16	4 1/16	2 7/8	7	3 1/8	1/2	1/16	2 7/8	2 5/16	11/16	4 3/8	9.80
	2	ZBS2200			ZB2200													9.60
	50.00	*ZBS2050MM*	*114.30*	*17.46*	*ZB2050MM*	*107.95*	*17.46*	*103.19*	*73.03*	*177.80*	*79.38*	*13.00*	*1.59*	*73.03*	*58.740*	*17.46*	*111.130*	*4.50*
7	2 3/16	ZBS2203	4 7/8	11/16	ZB2203	4 7/8	11/16	4 1/2	3 3/16	7 3/4	3 5/16	5/8	3/32	3 1/4	2 5/8	13/16	5	13.30
	2 1/4	ZBS2204			ZB2204													13.10
	55.00	*ZBS2055MM*	*123.83*	*17.46*	*ZB2055MM*	*123.83*	*17.46*	*114.30*	*80.96*	*196.85*	*84.14*	*16.00*	*2.38*	*82.55*	*66.680*	*19.84*	*127.000*	*6.10*
8	2 3/8	ZBS2206	5 3/8	3/4	ZB2206	5 3/8	3/4	4 49/64	3 3/8	8 1/8	3 1/2	5/8	3/32	3 9/16	2 29/32	7/8	5 7/16	16.70
	2 7/16	ZBS2207			ZB2207													16.60
	2 1/2	ZBS2208			ZB2208													16.40
	60.00	*ZBS2060MM*	*136.53*	*19.05*	*ZB2060MM*	*136.53*	*19.05*	*121.06*	*85.73*	*206.38*	*88.90*	*16.00*	*2.38*	*90.49*	*73.810*	*22.23*	*138.110*	*7.60*
	65.00	*ZBS2065MM*			*ZB2065MM*													*7.40*
9	2 11/16	ZBS2211	6 1/4	7/8	ZB2211	6 1/4	7/8	5 9/16	3 15/16	9 1/2	4	3/4	3/32	4 1/16	3 3/8	7/8	6 5/16	26.50
	2 3/4	ZBS2212			ZB2212													26.10
	2 15/16	ZBS2215			ZB2215													25.60
	3	ZBS2300			ZB2300													25.10
	70.00	*ZBS2070MM*	*158.75*	*22.23*	*ZB2070MM*	*158.75*	*22.23*	*141.29*	*100.01*	*241.30*	*101.60*	*19.00*	*2.38*	*103.19*	*85.730*	*22.23*	*160.340*	*11.80*
	75.00	*ZBS2075MM*			*ZB2075MM*													*11.60*

Continued...

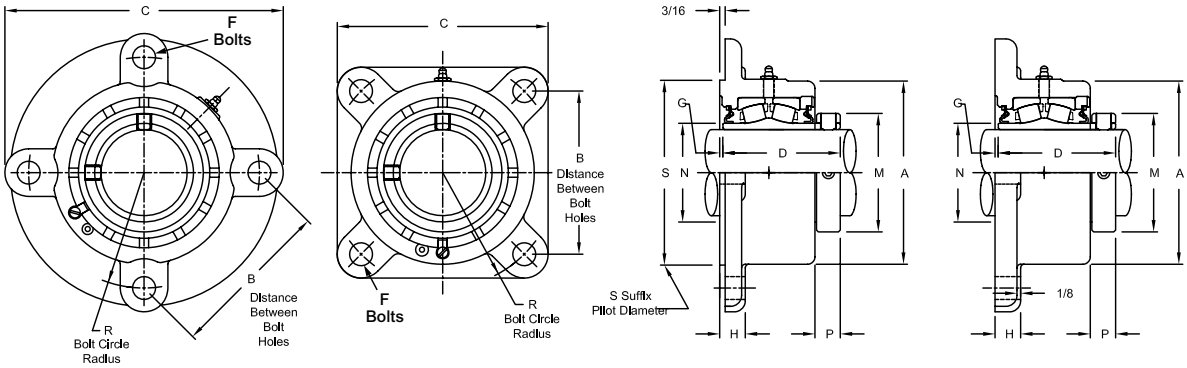

Four Bolt Round Flange Block | Four Bolt Square Flange Block | Side View Flange With Pilot | Side View Flange Block

Continued...

Bearing Dimensions

Size Code	Shaft Diameter	Expansion Part Number	Expansion A	Expansion H	Fixed Part Number	Fixed A	Fixed H	B Distance Between Bolt Holes	R Bolt Circle Radius	C	D	F Bolts	G	M	N	P	S	Approx. Weight
4-Bolt Square																		
10	3 3/16	ZBS2303	7 3/8	1 3/8	ZB2303	7 3/8	1	6 23/32	4 3/4	8 7/16	4 3/8	3/4	1/4	4 29/32	3 31/32	15/16	7 3/8	37.00
	3 7/16	ZBS2307			ZB2307													34.60
	3 1/2	ZBS2308			ZB2308													34.10
	80.00	*ZBS2080MM*	*187.33*	*34.93*	*ZB2080MM*	*187.33*	*25.40*	*170.66*	*120.65*	*214.31*	*111.13*	*19.00*	*6.35*	*124.62*	*100.810*	*23.81*	*187.330*	*16.80*
	85.00	*ZBS2085MM*			*ZB2085MM*													*15.70*
	90.00	*ZBS2090MM*			*ZB2090MM*													*15.50*
11	3 11/16	ZBS2311	8 3/8	1 1/2	ZB2311	8 1/2	1 3/16	7 19/32	5 3/8	9 3/4	5 1/16	7/8	1/4	5 5/8	4 9/16	1 1/32	8 1/2	59.00
	3 15/16	ZBS2315			ZB2315													56.00
	4	ZBS2400			ZB2400													
	100.00	*ZBS2100MM*	*212.73*	*38.10*	*ZB2100MM*	*215.90*	*30.20*	*192.89*	*136.53*	*247.65*	*128.59*	*22.00*	*6.35*	*142.88*	*115.890*	*26.19*	*215.900*	*25.40*

Additional Notes

Please call 1-866-REXNORD for availability

Metric bore sizes available, see Rex Interchangeability guide

Lubrication fitting tap size, 1/8" PT

Bore size = nominal shaft size +.001 in/-.000 in *(+0.03 mm/-0.00 mm)*

Machined pilot available, add suffix S

Seals - To specify G, K or M seal, replace “Z” in part number with “G”, “K” or “M”

Auxiliary end caps - available in all size codes except for size codes 2 thru 6 and expansion units

“G” seals available in size codes 3 thru 11

Also not available on size code 7 on flange side of non-piloted bearings and size code 7 thru 9 on flange side of piloted bearings

Pilot Diameter tolerance, +.000 in/-.003 in *(+0.00 mm/-0.08 mm)*

For the Selection Guide, Load Ratings and Speed Limits, see the Spherical Roller Bearings Engineering section on pages 15 - 27.

Note: Dimensions subject to change. Certified dimensions of ordered material furnished on request.

ZB3000, ZBS3000

Interchange: *QMFY, QMFL*

Photo Shows a 4-Bolt Spherical Roller Bearing Flanged Unit

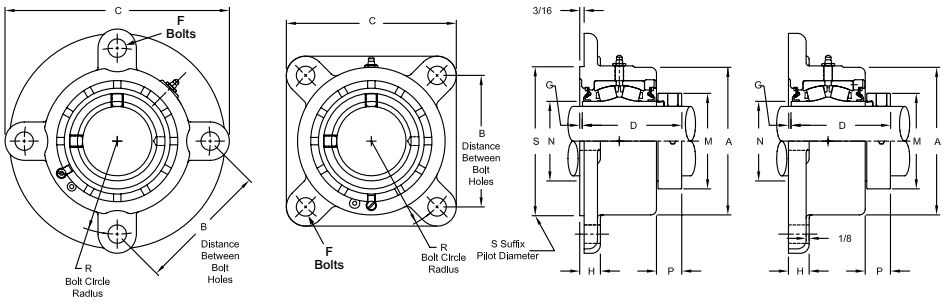

Four Bolt Round Flange Block | Four Bolt Square Flange Block | Side View Flange With Pilot | Side View Flange Block

Product Features

- Corrosion-resistant powder coating
- Cast iron housing
- Misalignment capabilities - total of 4°
- Broad range of sealing options
- Factory set clearance & lubrication
- Precision ground & superfinished raceways
- Hardened eccentric locking collar
- Field interchangeable seals
- See Features and Benefits for additional info on pages 10 - 13.

Bearing Dimensions

Size Code	Shaft Diameter	Expansion Part Number	Expansion A	Fixed Part Number	Fixed A	B Distance Between Bolt Holes	R Bolt Circle Radius	C	D	F Bolts	G	H	M	N	P	S	Approx. Weight
3-Bolt Round																	
4	1 7/16	ZBS3107	3 3/4	ZB3107	3 7/16	4 21/64	2 1/2	6 1/4	2 59/64	1/2	1/32	5/8	2 5/16	1 3/4	25/32	3 9/16	7.00
4-Bolt Round																	
5	1 11/16	ZBS3111	4 1/4	ZB3111	3 15/16	3 57/64	2 3/4	6 3/4	3 3/16	1/2	1/32	5/8	2 5/8	2 1/32	3/4	4 1/16	8.80
6	1 15/16	ZBS3115	4 1/2	ZB3115	4 1/4	4 1/16	2 7/8	7	3 9/32	1/2	1/16	11/16	2 3/4	2 5/16	27/32	4 3/8	10.00
7	2 3/16	ZBS3203	4 7/8	ZB3203	4 7/8	4 1/2	3 3/16	7 3/4	3 1/2	5/8	3/32	11/16	3 1/4	2 5/8	31/32	5	13.60
8	2 7/16	ZBS3207	5 3/8	ZB3207	5 3/8	4 49/64	3 3/8	8 1/8	3 21/32	5/8	3/32	3/4	3 9/16	2 29/32	1 1/64	5 7/16	16.80
	2 1/2	ZBS3208		ZB3208													16.60
9	2 11/16	ZBS3211	6 1/4	ZB3211	6 1/4	5 9/16	3 15/16	9 1/2	4 13/64	3/4	3/32	7/8	4 1/16	3 3/8	1 1/64	6 5/16	27.10
	2 15/16	ZBS3215		ZB3215													26.00
4-Bolt Square																	
10	3 7/16	ZBS3307	7 3/8	ZB3307	7 3/8	6 23/32	4 3/4	8 7/16	4 37/64	3/4	1/4	1	4 15/16	3 31/32	1 9/64	7 3/8	35.70
	3 1/2	ZBS3308		ZB3308													35.20
11	3 15/16	ZBS3315	8 3/8	ZB3315	8 1/2	7 19/32	5 3/8	9 3/4	5 3/16	7/8	1/4	1 1/8	5 5/8	4 9/16	1 1/16	8 1/2	56.00

Additional Notes

- Please call 1-866-REXNORD for availability
- Lubrication fitting tap size, 1/8" PT
- Bore size = nominal shaft size +.001 in/-.000 in *(+0.03 mm/-0.00 mm)*
- Machined pilot available, add suffix S
- Seals - To specify G, K or M seal, replace "Z" in part number with "G", "K" or "M"
- Auxiliary end caps - available in all size codes except for size codes 4 thru 6 and expansion units
- Also not available on size code 7 on flange side of non-piloted bearings and size code 7 thru 9 on flange side of piloted bearings
- Pilot Diameter tolerance, +.000 in/-.003 in *(+0.00 mm/-0.08 mm)*
- For the Selection Guide, Load Ratings and Speed Limits, see the Spherical Roller Bearings Engineering section on pages 15 - 27.
- Note: Dimensions subject to change. Certified dimensions of ordered material furnished on request.

ZB5000, ZBS5000

Interchange: *QAAFY, QAAFL*

Photo Shows a 4-Bolt Spherical Roller Bearing Flanged Unit

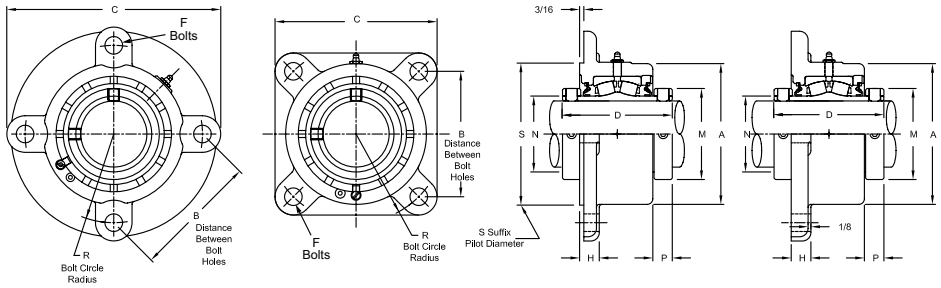

Four Bolt Round Flange Block | Four Bolt Square Flange Block | Side View Flange With Pilot | Side View Flange Block

Product Features

- Corrosion-resistant powder coating
- Cast iron housing
- Misalignment capabilities - total of 4°
- Broad range of sealing options
- Factory set clearance & lubrication
- Precision ground & superfinished raceways
- Two hardened spring locking collars
- Field interchangeable seals
- See Features and Benefits for additional info on pages 10 - 13.

Bearing Dimensions

Size Code	Shaft Diameter	Expansion Part Number	Expansion A	Expansion H	Fixed Part Number	Fixed A	Fixed H	B Distance Between Bolt Holes	R Bolt Circle Radius	C	D	F Bolts	M	N	P	S	Approx. Weight
3-Bolt Round																	
4	1 7/16	ZBS5107	3 3/4	5/8	ZB5107	3 7/16	5/8	4 21/64	2 1/2	6 1/4	3 9/16	1/2	2 5/16	1 3/4	11/16	3 9/16	7.10
	35.00	*ZBS5035MM*	*95.25*	*15.88*	*ZB5035MM*	*87.31*	*15.88*	*109.93*	*63.50*	*158.75*	*90.49*	*13.00*	*58.74*	*44.450*	*17.46*	*90.490*	*3.20*
4-Bolt Round																	
5	1 1/2	ZBS5108	4 1/4	5/8	ZB5108	3 15/16	5/8	3 57/64	2 3/4	6 3/4	3 13/16	1/2	2 19/32	2 1/32	11/16	4 1/16	9.60
	1 11/16	ZBS5111			ZB5111												9.20
	40.00	*ZBS5040MM*	*107.95*	*15.88*	*ZB5040MM*	*100.01*	*15.88*	*98.83*	*69.85*	*171.45*	*96.84*	*13.00*	*65.88*	*51.580*	*17.46*	*103.190*	*4.30*
	45.00	*ZBS5045MM*			*ZB5045MM*												*4.20*
6	1 15/16	ZBS5115	4 1/2	11/16	ZB5115	4 1/4	11/16	4 1/16	2 7/8	7	3 13/16	1/2	2 7/8	2 5/16	11/16	4 3/8	10.40
	50.00	*ZBS5050MM*	*114.30*	*17.46*	*ZB5050MM*	*107.95*	*17.46*	*103.19*	*73.03*	*177.80*	*96.84*	*13.00*	*73.03*	*58.740*	*17.46*	*111.130*	*4.70*
7	2	ZBS5200	4 7/8	11/16	ZB5200	4 7/8	11/16	4 1/2	3 3/16	7 3/4	4 1/8	5/8	3 1/4	2 5/8	13/16	5	15.00
	2 3/16	ZBS5203			ZB5203												14.40
	55.00	*ZBS5055MM*	*123.83*	*17.46*	*ZB5055MM*	*123.83*	*17.46*	*114.30*	*80.96*	*196.85*	*104.78*	*16.00*	*82.60*	*66.680*	*20.64*	*127.000*	*6.50*
8	2 7/16	ZBS5207	5 3/8	3/4	ZB5207	5 3/8	3/4	4 49/64	3 3/8	8 1/8	4 3/8	5/8	3 9/16	2 29/32	7/8	5 7/16	17.70
	60.00	*ZBS5060MM*	*136.53*	*19.05*	*ZB5060MM*	*136.53*	*19.05*	*121.06*	*85.73*	*206.38*	*111.13*	*16.00*	*90.50*	*73.810*	*22.23*	*138.110*	*8.10*
	65.00	*ZBS5065MM*			*ZB5065MM*												*8.00*
9	2 1/2	ZBS5208	6 1/4	7/8	ZB5208	6 1/4	7/8	5 9/16	3 15/16	9 1/2	4 7/8	3/4	4 1/16	3 3/8	7/8	6 5/16	29.20
	2 11/16	ZBS5211			ZB5211												28.20
	2 15/16	ZBS5215			ZB5215												27.70
	70.00	*ZBS5070MM*	*158.75*	*22.23*	*ZB5070MM*	*158.75*	*22.23*	*141.29*	*100.01*	*241.30*	*123.83*	*19.00*	*103.20*	*85.730*	*22.23*	*160.340*	*12.80*
	75.00	*ZBS5075MM*			*ZB5075MM*												*12.60*
4-Bolt Square																	
10	3 3/16	ZBS5303	7 3/8	1 3/8	ZB5303	7 3/8	1	6 23/32	4 3/4	8 7/16	5 5/16	3/4	4 29/32	3 31/32	15/16	7 3/8	39.60
	3 7/16	ZBS5307			ZB5307												37.70
	80.00	*ZBS5080MM*	*187.33*	*34.93*	*ZB5080MM*	*187.33*	*25.40*	*170.66*	*120.65*	*214.31*	*134.94*	*19.00*	*124.62*	*100.810*	*23.81*	*187.330*	*18.00*
	85.00	*ZBS5085MM*			*ZB5085MM*												*17.00*
	90.00	*ZBS5090MM*			*ZB5090MM*												*16.50*
11	3 11/16	ZBS5311	8 3/8	1 1/2	ZB5311	8 1/2	1 3/16	7 19/32	5 3/8	9 3/4	6 1/8	7/8	5 5/8	4 9/16	1 1/32	8 1/2	61.50
	3 15/16	ZBS5315			ZB5315												60.50
	4	ZBS5400			ZB5400												59.50
	100.00	*ZBS5100MM*	*212.73*	*38.10*	*ZB5100MM*	*215.90*	*30.20*	*192.89*	*136.53*	*247.65*	*155.58*	*22.00*	*142.90*	*115.890*	*26.19*	*215.900*	*27.50*

Additional Notes

- Please call 1-866-REXNORD for availability
- Metric bore sizes available, see Rex Interchangeability guide
- Lubrication fitting tap size, 1/8" PT
- Bore size = nominal shaft size +.001 in/-.000 in *(+0.03 mm/-0.00 mm)*
- Machined pilot available, add suffix S
- Seals - To specify G, K or M seal, replace "Z" in part number with "G", "K" or "M"
- Auxiliary end caps - available in all size codes except for size codes 4 thru 6 and expansion units
- Also not available on size code 7 on flange side of non-piloted bearings and size code 7 thru 9 on flange side of piloted bearings
- Pilot Diameter tolerance, +.000 in/-.003 in *(+0.00 mm/-0.08 mm)*
- For the Selection Guide, Load Ratings and Speed Limits, see the Spherical Roller Bearings Engineering section on pages 15 - 27.
- Note: Dimensions subject to change. Certified dimensions of ordered material furnished on request.

ZB6000, ZBS6000

Interchange: *F4RIP, F4SIP, USFB5000A, QVFL, QVVFL*

Photo Shows a 4-Bolt Spherical Roller Bearing Flanged Unit

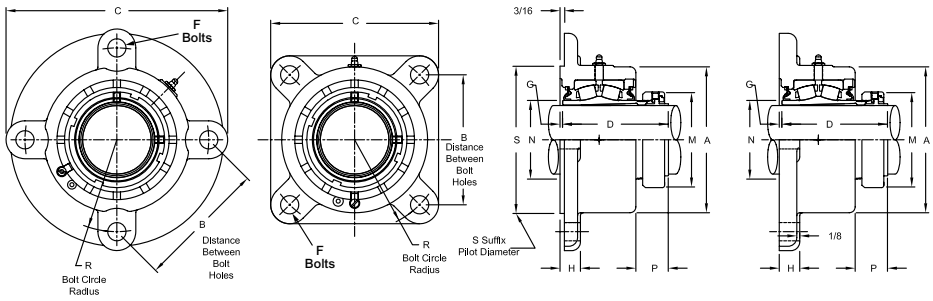

Four Bolt Round Flange Block | Four Bolt Square Flange Block | Side View Flange With Pilot | Side View Flange Block

Product Features

- Spyglass Optical Strain Sensor (OSS) Technology
- Positive locking system
- Tapered adapter sleeve
- Corrosion-resistant powder coating
- Cast iron housing
- Misalignment capabilities - total of 4°
- Broad range of sealing options
- Factory set clearance & lubrication
- Precision ground & superfinished raceways
- See Features and Benefits for additional info on pages 10 - 13.

Bearing Dimensions

Size Code	Shaft Diameter	Expansion Part Number	Expansion A	Expansion H	Fixed Part Number	Fixed A	Fixed H	B Distance Between Bolt Holes	R Bolt Circle Radius	C	D	F Bolts	G	M	N	P	S	Approx. Weight
3-Bolt																		
4	1 7/16	ZBS6107	3 3/4	5/8	ZB6107	3 7/16	5/8	4 21/64	2 1/2	6 1/4	3 21/64	1/2	1/32	2 25/64	1 3/4	1 9/64	3 9/16	6.80
4-Bolt Round																		
5	1 11/16	ZBS6111	4 1/4	5/8	ZB6111	3 15/16	5/8	3 57/64	2 3/4	6 3/4	3 47/64	1/2	1/32	2 41/64	2 1/32	1 9/32	4 1/16	8.60
6	1 15/16	ZBS6115	4 1/2	11/16	ZB6115	4 1/4	11/16	4 1/16	2 7/8	7	3 41/64		1/16	2 55/64	2 5/16	1 1/8	4 3/8	9.80
	45.00	*ZBS6045MM*	*114.30*	*17.46*	*ZB6045MM*	*107.95*	*17.46*	*103.19*	*73.03*	*177.80*	*92.47*	*13.00*	*1.59*	*72.63*	*58.740*	*28.58*	*111.130*	*4.20*
7	2 3/16	ZBS6203	4 7/8	11/16	ZB6203	4 7/8	11/16	4 1/2	3 3/16	7 3/4	3 11/16	5/8	3/32	3 15/64	2 5/8	1 5/32	5	13.30
	55.00	*ZBS6055MM*	*123.83*	*17.46*	*ZB6055MM*	*123.83*	*17.46*	*114.30*	*80.96*	*196.85*	*93.66*	*16.00*	*2.38*	*82.15*	*66.680*	*29.37*	*127.000*	*6.50*
8	2 3/8	ZBS6206	5 3/8	3/4	ZB6206	5 3/8	3/4	4 49/64	3 3/8	8 1/8	4 1/16	5/8	3/32	3 19/32	2 29/32	1 27/64	5 7/16	16.70
	2 7/16	ZBS6207			ZB6207													16.60
	60.00	*ZBS6060MM*	*136.53*	*19.05*	*ZB6060MM*	*136.53*	*19.05*	*121.06*	*85.73*	*206.38*	*103.19*	*16.00*	*2.38*	*91.28*	*73.810*	*36.12*	*138.110*	*8.10*
9	2 11/16	ZBS6211	6 1/4	7/8	ZB6211	6 1/4	7/8	5 9/16	3 15/16	9 1/2	4 17/32	3/4	3/32	4 3/32	3 3/8	1 25/64	6 5/16	26.50
	2 3/4	ZBS6212			ZB6212													26.10
	2 15/16	ZBS6215			ZB6215													25.60
	70.00	*ZBS6070MM*	*158.75*	*22.23*	*ZB6070MM*	*158.75*	*22.23*	*141.29*	*100.01*	*241.30*	*115.09*	*19.00*	*2.38*	*103.98*	*85.730*	*35.32*	*160.340*	*12.80*
	75.00	*ZBS6075MM*			*ZB6075MM*													*12.60*
4-Bolt Square																		
10	3 3/16	ZBS6303	7 3/8	1 3/8	ZB6303	7 3/8	1	6 23/32	4 3/4	8 7/16	5 1/32	3/4	1/4	4 61/64	3 31/32	1 19/32	7 3/8	37.00
	3 7/16	ZBS6307			ZB6307													34.60
	80.00	*ZBS6080MM*	*187.33*	*34.93*	*ZB6080MM*	*187.33*	*25.40*	*170.66*	*120.65*	*214.31*	*127.79*	*19.00*	*6.35*	*125.81*	*100.810*	*40.48*	*187.330*	*18.00*
	85.00	*ZBS6085MM*			*ZB6085MM*													*17.00*
11	3 11/16	ZBS6311	8 3/8	1 1/2	ZB6311	8 1/2	1 3/16	7 19/32	5 3/8	9 3/4	5 25/32	7/8	1/4	5 43/64	4 9/16	1 47/64	8 1/2	59.00
	3 15/16	ZBS6315			ZB6315													56.00
	90.00	*ZBS6090MM*	*212.73*	*38.10*	*ZB6090MM*	*215.90*	*30.20*	*192.89*	*136.53*	*247.65*	*146.84*	*22.00*	*6.35*	*144.07*	*115.890*	*44.05*	*215.900*	*27.50*
	100.00	*ZBS6100MM*			*ZB6100MM*													

Additional Notes

- Please call 1-866-REXNORD for availability
- Lubrication fitting tap size, 1/8" PT
- Machined pilot available, add suffix S
- Seals - To specify G, K or M seal, replace "Z" in part number with "G", "K" or "M"
- Auxiliary end caps - available in all size codes except for size code 4 thru 6 and expansion units
- Also not available on size code 7 on flange side of non-piloted bearings and size code 7 thru 9 on flange side of piloted bearings
- Pilot Diameter tolerance, +.000 in/-.003 in *(+0.00 mm/-0.08 mm)*
- For the Selection Guide, Load Ratings and Speed Limits, see the Spherical Roller Bearings Engineering section on pages 15 - 27.
- Note: Dimensions subject to change. Certified dimensions of ordered material furnished on request.

ZB9000, ZBS9000

Photo Shows a 4-Bolt Spherical Roller Bearing Flanged Unit

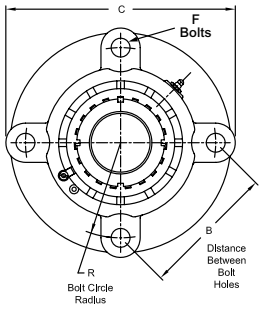

Four Bolt Round Flange Block

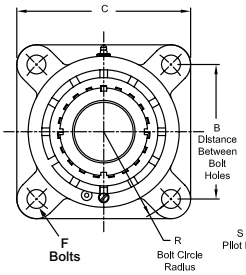

Four Bolt Square Flange Block

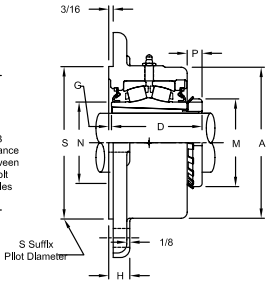

Side View Flange With Pilot

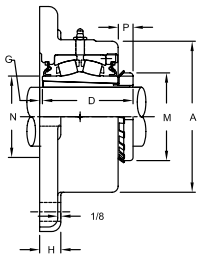

Side View Flange Block

Product Features

- Corrosion-resistant powder coating
- Cast iron housing
- Misalignment capabilities - total of 4°
- Broad range of sealing options
- Factory set clearance & lubrication
- Precision ground & superfinished raceways
- Enhanced life mounting style
- Field interchangeable seals
- See Features and Benefits for additional info on pages 10 - 13.

Bearing Dimensions

Size Code	Shaft Diameter	Expansion Part Number	Expansion A	Expansion H	Fixed Part Number	Fixed A	Fixed H	B Distance Between Bolt Holes	R Bolt Circle Radius	C	D	F Bolts	G	M	N	P	S	Approx. Weight
4-Bolt Round																		
7	1 15/16	ZBS9115	4 7/8	11/16	ZB9115	4 7/8	11/16	4 1/2	3 3/16	7 3/	3 5/32	5/8	3/32	2 31/32	2 5/8	19/32	5	13.50
	2	ZBS9200			ZB9200													13.40
	45.00	*ZBS9045MM*	*123.83*	*17.46*	*ZB9045MM*	*123.83*	*17.46*	*114.30*	*80.96*	*196.85*	*80.17*	*16.00*	*2.38*	*75.40*	*66.680*	*15.08*	*127.000*	*6.40*
	50.00	*ZBS9050MM*			*ZB9050MM*													*6.10*
8	2 3/16	ZBS9203	5 3/8	3/4	ZB9203	5 3/8	3/4	4 49/64	3 3/8	8 1/8	3 11/32	5/8	3/32	3 3/8	2 29/32	23/32	5 7/16	17.00
	55.00	*ZBS9055MM*	*136.53*	*19.05*	*ZB9055MM*	*136.53*	*19.05*	*121.06*	*85.73*	*206.38*	*84.93*	*16.00*	*2.38*	*85.73*	*73.810*	*18.26*	*138.110*	*7.70*
9	2 7/16	ZBS9207	6 1/4	7/8	ZB9207	6 1/4	7/8	5 9/16	3 15/16	9 1/2	3 3/4	3/4	3/32	3 5/8	3 3/8	5/8	6 5/16	25.80
	2 1/2	ZBS9208			ZB9208													25.40
4-Bolt Square																		
10	2 11/16	ZBS9211	7 3/8	1 3/8	ZB9211	7 3/8	1	6 23/32	4 3/4	8 7/16	4 1/4	3/4	1/4	4 13/32	3 31/32	13/16	7 3/8	38.20
	2 15/16	ZBS9215			ZB9215													37.00
	3	ZBS9300			ZB9300													36.50
	75.00	*ZBS9075MM*	*187.33*	*34.93*	*ZB9075MM*	*187.33*	*25.40*	*170.66*	*120.65*	*214.31*	*107.95*	*19.00*	*6.35*	*111.92*	*100.810*	*20.64*	*187.330*	*16.80*
11	3 3/16	ZBS9303	8 3/8	1 1/2	ZB9303	8 1/2	1 3/16	7 19/32	5 3/8	9 3/4	5	7/8	1/4	5 3/16	4 9/16	15/16	8 1/2	62.00
	3 7/16	ZBS9307			ZB9307													60.00
	80.00	*ZBS9080MM*	*212.73*	*38.10*	*ZB9080MM*	*215.90*	*30.20*	*192.89*	*136.53*	*247.65*	*127.00*	*22.00*	*6.35*	*131.76*	*115.890*	*23.81*	*215.900*	*28.10*

Additional Notes

- Please call 1-866-REXNORD for availability
- Lubrication fitting tap size, 1/8" PT
- Machined pilot available, add suffix S
- Seals - To specify G, K or M seal, replace “Z” in part number with “G”, “K” or “M”
- Auxiliary end caps - available in all size codes except for size code 7 on flange side of non-piloted bearings and size code 7 thru 9 on flange side of piloted bearings and expansion units
- Pilot Diameter tolerance, +.000 in/-.003 in *(+0.00 mm/-0.08 mm)*

For the Selection Guide, Load Ratings and Speed Limits, see the Spherical Roller Bearings Engineering section on pages 15 - 27.

Note: Dimensions subject to change. Certified dimensions of ordered material furnished on request.

ZF5000, ZFS5000

Interchange: *QAAFX*

Photo Shows a 4-Bolt Spherical Roller Bearing Flanged Unit

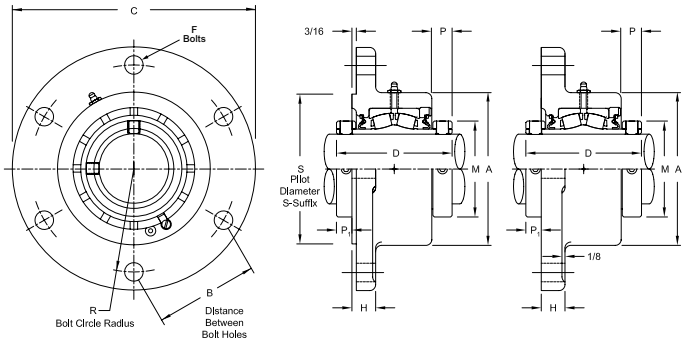

Six Bolt Round Flange Block

Side View Flange Block With Pilot

Full Side View Flange Block Fixed

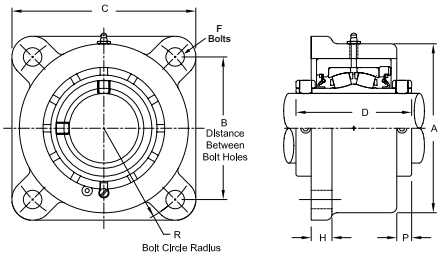

Four Bolt Square Flange Block

Full Side View Square Flange Block Floating

Product Features

- Corrosion-resistant powder coating
- Cast iron housing
- Misalignment capabilities - total of 4°
- Broad range of sealing options
- Factory set clearance & lubrication
- Precision ground & superfinished raceways
- Two hardened spring locking collars
- Field interchangeable seals
- Fixed or Expansion - up to 3/4" expansion
- See Features and Benefits for additional info on pages 10 - 13.

Bearing Dimensions

Size Code	Shaft Diameter	Expansion						Fixed						B Distance Between Bolt Holes	R Bolt Circle Radius	C	D	H	M	P1
		Part Number	A	F Bolts	P	S	Approx. Weight	Part Number	A	F Bolts	P	S	Approx. Weight							
4-Bolt Square																				
4	1 7/16	ZFS5107	4 7/16	1/2	15/32	4 7/16	9.60	ZF5107	3 11/16	1/2	11/16	3 9/16	7.60	3 23/32	2 5/8	4 15/16	3 9/16	5/8	2 5/16	1/2
	35.00	*ZFS5035MM*	*112.71*	*13.00*	*11.89*	*112.710*	*4.40*	*ZF5035MM*	*93.66*	*13.00*	*17.46*	*90.490*	*3.40*	*94.46*	*66.68*	*125.41*	*90.49*	*15.88*	*58.74*	*12.70*
5	1 1/2	ZFS5108	5	1/2	13/32	4 3/4	12.60	ZF5108	4 1/4	1/2	11/16	4 1/16	10.40	3 57/64	2 3/4	5 1/8	3 13/16	5/8	2 19/32	15/32
	1 11/16	ZFS5111					12.30	ZF5111					9.70							
	40.00	*ZFS5040MM*	*127.00*	*13.00*	*10.31*	*120.650*	*5.70*	*ZF5040MM*	*107.95*	*13.00*	*17.46*	*103.190*	*4.70*	*98.83*	*69.85*	*130.18*	*96.84*	*15.88*	*65.88*	*11.89*
	45.00	*ZFS5045MM*					*5.60*	*ZF5045MM*					*4.40*							
6	1 15/16	ZFS5115	5 1/8	1/2	13/32	5 1/8	12.80	ZF5115	4 1/2	1/2	11/16	4 3/8	10.40	4 1/16	2 7/8	5 5/16	3 13/16	5/8	2 7/8	15/32
	50.00	*ZFS5050MM*	*130.18*	*13.00*	*10.31*	*130.180*	*5.80*	*ZF5050MM*	*114.30*	*13.00*	*17.46*	*111.130*	*4.70*	*103.19*	*73.03*	*134.94*	*96.84*	*15.88*	*73.03*	*11.89*
7	2	ZFS5200	5 3/4	5/8	1/2	5 5/8	18.00	ZF5200	5	5/8	13/16	5	14.40	4 1/2	3 3/16	5 7/8	4 1/8	11/16	3 1/4	21/32
	2 3/16	ZFS5203					17.30	ZF5203					13.70							
	55.00	*ZFS5055MM*	*146.05*	*16.00*	*12.70*	*142.880*	*7.80*	*ZF5055MM*	*127.00*	*16.00*	*20.64*	*127.000*	*6.20*	*114.30*	*80.96*	*149.23*	*104.78*	*17.46*	*82.60*	*11.66*
8	2 7/16	ZFS5207	6	5/8	9/16	6	20.30	ZF5207	5 1/2	5/8	7/8	5 7/16	17.50	5 1/32	3 9/16	6 7/16	4 3/8	3/4	3 9/16	5/8
	60.00	*ZFS5060MM*	*152.40*	*16.00*	*14.29*	*152.400*	*9.20*	*ZF5060MM*	*139.70*	*16.00*	*22.23*	*138.110*	*7.90*	*127.80*	*90.49*	*163.51*	*111.13*	*19.05*	*90.50*	*15.88*
	65.00	*ZFS5065MM*					*8.70*	*ZF5065MM*					*7.50*							
9	2 1/2	ZFS5208	7 1/8	3/4	5/8	7 1/8	35.40	ZF5208	6 1/2	3/4	7/8	6 5/16	29.90	6 1/64	4 1/4	7 3/4	4 7/8	7/8	4 1/16	21/32
	2 11/16	ZFS5211					34.10	ZF5211					28.90							
	2 15/16	ZFS5215					33.20	ZF5215					26.90							
	70.00	*ZFS5070MM*	*180.98*	*19.00*	*15.88*	*180.980*	*15.50*	*ZF5070MM*	*165.10*	*19.00*	*22.23*	*160.340*	*13.10*	*152.80*	*107.95*	*196.85*	*123.83*	*22.23*	*103.20*	*16.66*
	75.00	*ZFS5075MM*					*15.10*	*ZF5075MM*					*12.20*							
10	3 3/16	ZFS5303	8	3/4	9/16	8	47.00	ZF5303	7 3/8	3/4	15/16	7 3/8	40.00	6 23/32	4 3/4	8 7/16	5 5/16	1	4 29/32	11/16
	3 7/16	ZFS5307					45.50	ZF5307					38.00							
	80.00	*ZFS5080MM*	*203.20*	*19.00*	*14.29*	*203.200*	*21.30*	*ZF5080MM*	*187.33*	*19.00*	*23.81*	*187.330*	*18.10*	*170.67*	*120.65*	*214.31*	*134.94*	*25.40*	*124.62*	*17.46*
	85.00	*ZFS5085MM*					*20.60*	*ZF5085MM*					*17.20*							
	90.00	*ZFS5090MM*					*19.60*	*ZF5090MM*					*16.20*							
11	3 11/16	ZFS5311	9 1/2	1	5/8	9 1/2	80.00	ZF5311	8 7/8	1	1 1/32	8 7/8	71.00	8 5/16	5 7/8	10 9/16	6 1/8	1 1/8	5 5/8	13/16
	3 15/16	ZFS5315					77.00	ZF5315					69.00							
	4	ZFS5400					76.00	ZF5400					68.00							
	100.00	*ZFS5100MM*	*241.30*	*25.00*	*15.88*	*241.300*	*35.00*	*ZF5100MM*	*225.43*	*25.00*	*26.19*	*225.430*	*31.30*	*211.14*	*149.23*	*268.29*	*155.58*	*28.58*	*142.90*	*20.64*
6-Bolt Round																				
12	4 3/16	ZFS5403Y	11 5/8	1	11/16	11 5/8	127.00	ZF5403Y	9 1/2	1	1 1/16	10 3/8	98.00	6 7/16	6 7/16	15 1/8	6 1/4	1 1/4	6 3/16	3/4
	4 7/16	ZFS5407Y					124.00	ZF5407Y					96.00							
	4 1/2	ZFS5408Y					123.00	ZF5408Y					95.00							
	110.00	*ZFS5110MM*	*295.28*	*25.00*	*17.46*	*295.280*	*56.00*	*ZF5110MM*	*241.30*	*25.00*	*26.99*	*263.530*	*43.50*	*163.51*	*163.51*	*384.18*	*158.75*	*31.75*	*157.16*	*19.05*
	115.00	*ZFS5115MM*						*ZF5115MM*					*43.00*							
13	4 15/16	ZFS5415	12 9/16	1	23/32	12 9/16	184.00	ZF5415	11 3/16	1 1/8	1 5/32	11 3/16	159.00	7	7	16 1/2	7 7/8	1 1/2	7 1/16	3/4

Continued...

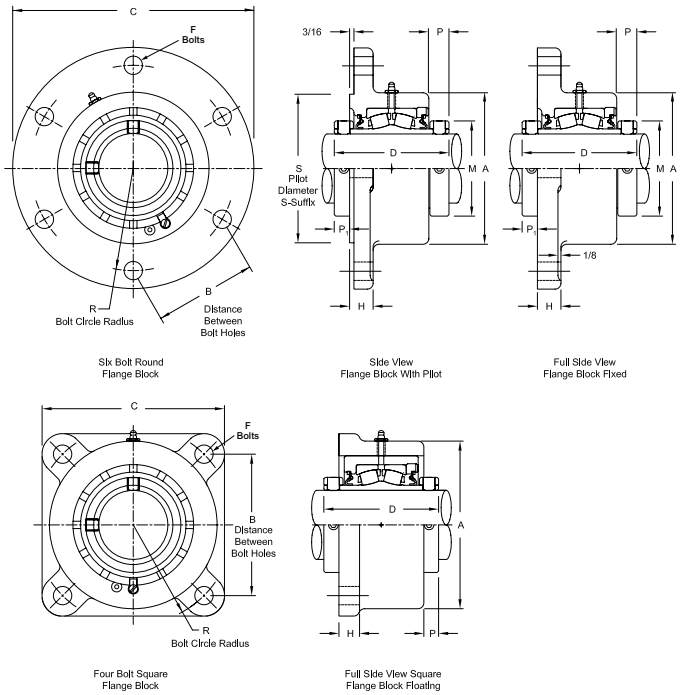

Continued...

Bearing Dimensions

Size Code	Shaft Diameter	Expansion						Fixed						B Distance Between Bolt Holes	R Bolt Circle Radius	C	D	H	M	P1
		Part Number	A	F Bolts	P	S	Approx. Weight	Part Number	A	F Bolts	P	S	Approx. Weight							
6-Bolt Round (continued)																				
13	5	ZFS5500	12 9/16	1	23/32	12 9/16	183.00	ZF5500	11 3/16	1 1/8	1 3/16	11 3/16	156.00	7	7	16 1/2	7 7/8	1 1/2	7 1/16	3/4
	125.00	*ZFS5125MM*	*319.09*	*25.00*	*18.25*	*319.090*	*83.00*	*ZF5125MM*	*284.16*	*28.00*	*29.37*	*284.160*	*72.00*	*177.80*	*177.80*	*419.10*	*200.03*	*38.10*	*179.39*	*19.05*
	130.00	*ZFS5130MM*						*ZF5130MM*					*71.00*							

Additional Notes

Please call 1-866-REXNORD for availability

Metric bore sizes available, see Rex Interchangeability guide

Lubrication fitting tap size: for size code 4 thru 11, 1/8" PT: for all other size codes, 1/4" PT

Bore size = nominal shaft size +.001 in/-.000 in *(+0.03 mm/-0.00 mm)*

Machined pilot available, add suffix S

Expansion - size code 4 thru 8 is 3/8", size code 9 thru 11 is 1/2" & size code 12 thru 13 is 3/4"

Seals - To specify G, K or M seal, replace “Z” in part number with “G”, “K” or “M”

“K” seals only available in size codes 4 thru 11

Auxiliary end caps - available in all size codes except for size codes 4 thru 6 on flange side of piloted bearings and size code 12 ZFS bearings

Pilot Diameter tolerance, +.000 in/-.003 in *(+0.00 mm/-0.08 mm)*

For the Selection Guide, Load Ratings and Speed Limits, see the Spherical Roller Bearings Engineering section on pages 15 - 27.

Note: Dimensions subject to change. Certified dimensions of ordered material furnished on request.

ZF6000, ZFS6000

Interchange: *QVFX, QVVFX*

Photo Shows a 4-Bolt Spherical Roller Bearing Flanged Unit

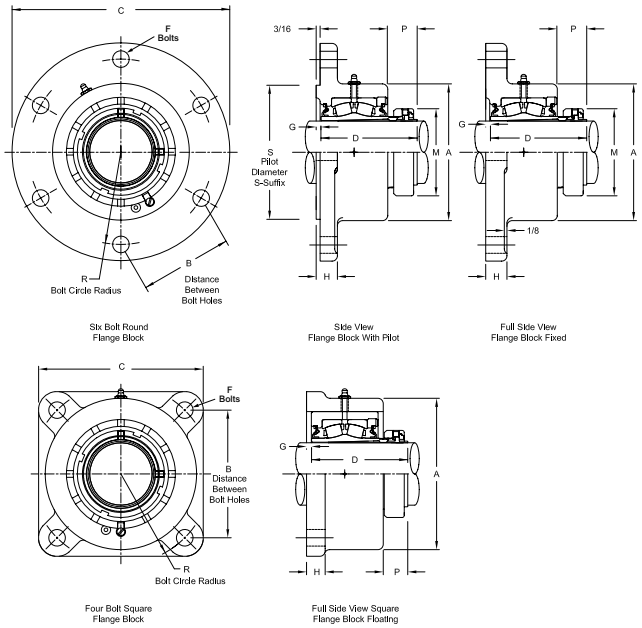

Product Features

- Spyglass Optical Strain Sensor (OSS) Technology
- Positive locking system
- Tapered adapter sleeve
- Corrosion-resistant powder coating
- Cast iron housing
- Misalignment capabilities - total of 4°
- Broad range of sealing options
- Factory set clearance & lubrication
- Precision ground & superfinished raceways
- See Features and Benefits for additional info on pages 10 - 13.

Bearing Dimensions

Size Code	Shaft Dia.	Expansion Part Number	Expansion A	Expansion F Bolts	Expansion G	Expansion P	Expansion S	Expansion Approx. Weight	Fixed Part Number	Fixed A	Fixed F Bolts	Fixed G	Fixed P	Fixed S	Fixed Approx. Weight	B Distance Between Bolt Holes	R Bolt Circle Radius	C	D	H	M
4-Bolt Square																					
4	1 7/16	ZFS6107	4 7/16	1/2	1 5/16	1 9/64	4 7/16	7.10	ZF6107	4 7/16	1/2	1 9/32	1 9/64	3 9/16	7.10	3 23/32	2 5/8	4 15/16	3 21/64	5/8	2 25/64
5	1 11/16	ZFS6111	5		1 1/2	1 9/32	4 3/4	9.10	ZF6111	4 3/4		1 27/64	1 9/32	4 1/16	9.10	3 57/64	2 3/4	5 1/8	3 47/64		2 41/64
6	1 15/16	ZFS6115	5 1/8		1 1/2	1	5 1/8	12.80	ZF6115	4 1/2		1 3/8	1 1/8	4 3/8	10.40	4 1/16	2 7/8	5 5/16	3 41/64		2 55/64
	45.00	*ZFS6045MM*	*130.18*	*13.00*		*25.40*	*130.180*	*5.80*	*ZF6045MM*	*114.30*	*13.00*		*28.58*	*111.130*	*4.70*	*103.19*	*73.03*	*134.94*	*92.47*	*15.88*	*72.63*
7	2 3/16	ZFS6203	5 3/4	5/8	1 9/16	1 1/16	5 5/8	17.30	ZF6203	5	5/8	1 27/64	1 5/32	5	13.70	4 1/2	3 3/16	5 7/8	3 11/16	11/16	3 15/64
	55.00	*ZFS6055MM*	*146.05*	*16.00*		*26.99*	*142.880*	*7.80*	*ZF6055MM*	*127.00*	*16.00*		*29.37*	*127.000*	*6.20*	*114.30*	*80.96*	*149.23*	*93.66*	*17.46*	*82.15*
8	2 3/8	ZFS6206	6	5/8	1 5/8	1 19/64	6	20.60	ZF6206	5 1/2	5/8	1 9/16	1 27/64	5 7/16	17.80	5 1/32	3 9/16	6 7/16	4 1/16	3/4	3 19/32
	2 7/16	ZFS6207						20.30	ZF6207						17.50						
	60.00	*ZFS6060MM*	*152.40*	*16.00*		*32.94*	*152.400*	*9.20*	*ZF6060MM*	*139.70*	*16.00*		*36.12*	*138.110*	*7.90*	*127.80*	*90.49*	*163.51*	*103.19*	*19.05*	*91.28*
9	2 11/16	ZFS6211	7 1/8	3/4	1 13/16	1 17/64	7 1/8	35.40	ZF6211	6 1/2	3/4	1 51/64	1 25/64	6 5/16	29.90	6 1/64	4 1/4	7 3/4	4 17/32	7/8	4 3/32
	2 3/4	ZFS6212						34.70	ZF6212						29.20						
	2 15/16	ZFS6215						34.10	ZF6215						28.90						
	70.00	*ZFS6070MM*	*180.98*	*19.00*		*32.15*	*180.980*	*15.50*	*ZF6070MM*	*165.10*	*19.00*		*35.32*	*160.340*	*13.10*	*152.80*	*107.95*	*196.85*	*115.09*	*22.23*	*103.98*
	75.00	*ZFS6075MM*						*15.10*	*ZF6075MM*						*12.20*						
10	3 3/16	ZFS6303	8	3/4	2 3/32	1 15/32	8	47.00	ZF6303	7 3/8	3/4	1 31/32	1 19/32	7 3/8	40.00	6 23/32	4 3/4	8 7/16	5 1/32	1	4 61/64
	3 7/16	ZFS6307						45.50	ZF6307						38.00						
	80.00	*ZFS6080MM*	*203.20*	*19.00*		*37.31*	*203.200*	*21.30*	*ZF6080MM*	*187.33*	*19.00*		*40.48*	*187.330*	*18.10*	*170.67*	*120.65*	*214.31*	*127.79*	*25.40*	*125.81*
	85.00	*ZFS6085MM*						*20.60*	*ZF6085MM*						*17.20*						
11	3 11/16	ZFS6311	9 1/2	1	2 7/16	1 39/64	9 1/2	80.00	ZF6311	8 7/8	1	2 5/16	1 47/64	8 7/8	71.00	8 5/16	5 7/8	10 9/16	5 25/32	1 1/8	5 43/64
	3 15/16	ZFS6315						77.00	ZF6315						69.00						
	90.00	*ZFS6090MM*	*241.30*	*25.00*			*241.300*	*35.00*	*ZF6090MM*	*225.43*	*25.00*			*225.430*	*31.30*	*211.14*	*149.23*	*268.29*	*146.84*	*28.58*	*144.07*
	100.00	*ZFS6100MM*							*ZF6100MM*												
6-Bolt Round																					
12	4 3/16	ZFS6403Y	11 5/8	1	2 7/16	1 3/4	11 5/8	127.00	ZF6403Y	9 1/2	1	2 3/8	1 7/8	10 3/8	98.00	6 7/16	6 7/16	15 1/8	6 1/4	1 1/4	6 1/16
	4 7/16	ZFS6407Y						124.00	ZF6407Y						96.00						
	110.00	*ZFS6110MM*	*295.28*	*25.00*		*44.45*	*295.280*	*56.00*	*ZF6110MM*	*241.30*	*25.00*		*47.63*	*263.530*	*43.50*	*163.51*	*163.51*	*384.18*	*158.75*	*31.75*	*153.99*
13	4 15/16	ZFS6415	12 9/16	1	3 7/32	2 1/64	12 9/16	184.00	ZF6415	11 3/16	1 1/8	3 3/16	2 1/4	11 3/16	159.00	7	7	16 1/2	7 15/16	1 1/2	6 61/64
	125.00	*ZFS6125MM*	*319.09*	*25.00*			*319.090*	*83.00*	*ZF6125MM*	*284.16*	*28.00*			*284.160*	*72.00*	*177.80*	*177.80*	*419.10*	*201.61*	*38.10*	*176.61*

Additional Notes

- Please call 1-866-REXNORD for availability
- Lubrication fitting tap size: for size code 6 thru 11, 1/8" PT: for all other size codes, 1/4" PT
- Machined pilot available, add suffix S
- Expansion - size code 6 thru 8 is 3/8", size code 9 thru 11 is 1/2" & size code 12 thru 13 is 3/4"
- Seals - To specify G, K or M seal, replace "Z" in part number with "G", "K" or "M"
- "K" seals only available in size codes 4 thru 11
- Auxiliary end caps - available in all size codes except for size code 6 on flange side of piloted bearings and size code 12 ZFS bearings
- For the Selection Guide, Load Ratings and Speed Limits, see the Spherical Roller Bearings Engineering section on pages 15 - 27.
- Note: Dimensions subject to change. Certified dimensions of ordered material furnished on request.

ZF9000, ZFS9000

Interchange: *QVFK, QVVFK, TAFK*

Photo Shows a 4-Bolt Spherical Roller Bearing Flanged Unit

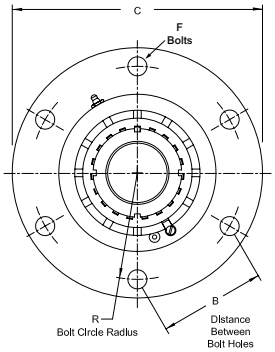

Six Bolt Round
Flange Block

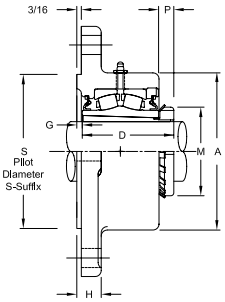

Side View
Flange Block With Pilot

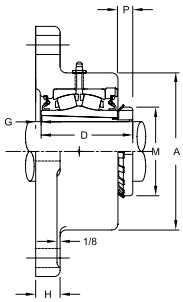

Full Side View
Flange Block Fixed

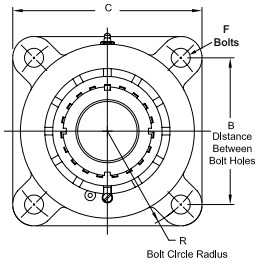

Four Bolt Square
Flange Block

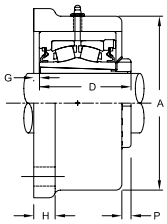

Full Side View Square
Flange Block Floating

Product Features

- Corrosion-resistant powder coating
- Cast iron housing
- Misalignment capabilities - total of 4°
- Broad range of sealing options
- Factory set clearance & lubrication
- Precision ground & superfinished raceways
- Enhanced life mounting style
- Field interchangeable seals
- Fixed or Expansion - up to 3/4" expansion
- See Features and Benefits for additional info on pages 10 - 13.

Bearing Dimensions

Size Code	Shaft Diameter	Flange Block - Expansion							Flange Block - Fixed							B Distance Between Bolt Holes	R Bolt Circle Radius	C	D	H	M
		Part Number	A	F Bolts	G	P	S	Approx. Weight	Part Number	A	F Bolts	G	P	S	Approx. Weight						
4-Bolt Square																					
7	1 15/16	ZFS9115	5 3/4	5/8	5/16	5/16	5 5/8	16.00	ZF9115	5	5/8	11/64	19/32	5	12.90	4 1/2	3 3/16	5 7/8	3 5/32	11/16	2 31/32
	2	ZFS9200						15.00	ZF9200						12.70						
	45.00	*ZFS9045MM*	*146.05*	*16.00*	*7.94*	*7.94*	*142.880*	*7.20*	*ZF9045MM*	*127.00*	*16.00*	*4.34*	*15.08*	*127.000*	*6.10*	*114.30*	*80.96*	*149.23*	*80.17*	*17.46*	*75.40*
	50.00	*ZFS9050MM*						*7.00*	*ZF9050MM*						*5.80*						
8	2 3/16	ZFS9203	6	5/8	5/16	11/32	6	19.00	ZF9203	5 1/2	5/8	1/4	23/32	5 7/16	16.40	5 1/32	3 9/16	6 7/16	3 11/32	3/4	3 3/8
	55.00	*ZFS9055MM*	*152.40*	*16.00*	*7.94*	*8.73*	*152.400*	*8.60*	*ZF9055MM*	*139.70*	*16.00*	*6.35*	*18.26*	*138.110*	*7.50*	*127.80*	*90.49*	*163.51*	*84.93*	*19.05*	*85.73*
9	2 7/16	ZFS9207	7 1/8	3/4	1/4	15/32	7 1/8	31.00	ZF9207	6 1/2	3/4	15/64	5/8	6 5/16	26.60	6 1/64	4 1/4	7 3/4	3 3/4	7/8	3 5/8
	2 1/2	ZFS9208							ZF9208						26.40						
10	2 11/16	ZFS9211	8	3/4	3/8	7/16	8	45.30	ZF9211	7 3/8	3/4	1/4	13/16	7 3/8	37.60	6 23/32	4 3/4	8 7/16	4 1/4	1	4 13/32
	2 15/16	ZFS9215						44.00	ZF9215						37.00						
	3	ZFS9300						43.00	ZF9300						36.60						
	75.00	*ZFS9075MM*	*203.20*	*19.00*	*9.53*	*11.11*	*203.200*	*20.00*	*ZF9075MM*	*187.33*	*19.00*	*6.35*	*20.64*	*187.330*	*16.80*	*170.67*	*120.65*	*214.31*	*107.95*	*25.40*	*111.92*
11	3 3/16	ZFS9303	9 1/2	1	3/8	9/16	9 1/2	79.00	ZF9303	8 7/8	1	1/4	15/16	8 7/8	66.00	8 5/16	5 7/8	10 9/16	5	1 1/8	5 3/16
	3 7/16	ZFS9307						76.00	ZF9307						65.00						
	80.00	*ZFS9080MM*	*241.30*	*25.00*	*9.53*	*14.29*	*241.300*	*36.00*	*ZF9080MM*	*225.43*	*25.00*	*6.35*	*23.81*	*225.430*	*30.00*	*211.14*	*149.23*	*268.29*	*127.00*	*28.58*	*131.76*
6-Bolt Round																					
12	3 11/16	ZFS9311Y	11 5/8	1	3/16	23/32	11 5/8	126.00	ZF9311Y	9 1/2	1	1/8	1 1/32	10 3/8	96.00	6 7/16	6 7/16	15 1/8	5 17/32	1 1/4	5 23/32
	3 15/16	ZFS9315Y						124.00	ZF9315Y						94.00						
	4	ZFS9400Y						123.00	ZF9400Y						93.00						
	100.00	*ZFS9100MM*	*295.28*	*25.00*	*4.76*	*18.25*	*295.280*	*56.00*	*ZF9100MM*	*241.30*	*25.00*	*3.18*	*26.19*	*263.530*	*43.00*	*163.51*	*163.51*	*384.18*	*140.49*	*31.75*	*145.26*
13	4 3/16	ZFS9403	12 9/16	1	5/16	5/8	12 9/16	184.00	ZF9403	11 3/16	1 1/8	9/32	1 1/8	11 3/16	159.00	7	7	16 1/2	6 3/4	1 1/2	6 1/8
	4 7/16	ZFS9407						182.00	ZF9407						157.00						

Additional Notes

- Please call 1-866-REXNORD for availability
- Lubrication fitting tap size: for size code 7 thru 11, 1/8" PT: for all other size codes, 1/4" PT
- Machined pilot available, add suffix S
- Expansion - size code 7 thru 8 is 3/8", size code 9 thru 11 is 1/2" & size code 12 thru 13 is 3/4"
- Seals - To specify G, K or M seal, replace “Z” in part number with “G”, “K” or “M”
- “K” seals only available in size codes 7 thru 11
- Auxiliary end caps - available in all size codes except size code 12 ZFS bearings
- For the Selection Guide, Load Ratings and Speed Limits, see the Spherical Roller Bearings Engineering section on pages 15 - 27.
- Note: Dimensions subject to change. Certified dimensions of ordered material furnished on request.

ZEF2000

Interchange: *EF4BS2, F4BE, FYE, USFBE5000, RFBA, QAF, E4BFTRB*

Photo Shows a 4-Bolt Spherical Roller Bearing Flanged Unit

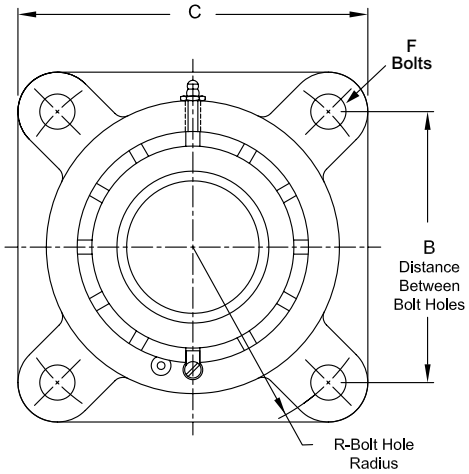

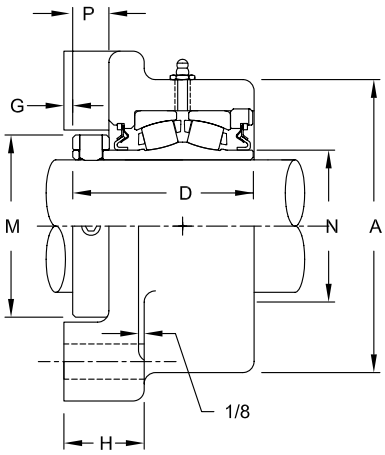

Product Features

- Corrosion-resistant powder coating
- Cast iron housing
- Misalignment capabilities - total of 4°
- Broad range of sealing options
- Factory set clearance & lubrication
- Precision ground & superfinished raceways
- Hardened spring locking collar
- Field interchangeable seals
- See Features and Benefits for additional info on pages 10 - 13.

Bearing Dimensions

Size Code	Shaft Diameter	Part Number	B Distance Between Bolt Holes	R Bolt Circle Radius	A	C	D	F Bolts	G	H	M	N	P	Approx. Weight
4	1 7/16	ZEF2107	3 1/2	2 15/32	3 11/16	4 5/8	2 7/8	1/2	1/16	1 3/8	2 5/16	1 3/4	11/16	7.20
	1 1/2	ZEF2108	4 1/8	2 59/64	4 1/4	5 3/8			1/8	1 7/16				10.00
	35.00	*ZEF2035MM*	*88.90*	*62.69*	*93.66*	*117.48*	*73.02*	*13.00*	*1.59*	*34.93*	*58.74*	*44.450*	17.46	*3.20*
5	1 11/16	ZEF2111	4 1/8	2 59/64	4 1/4	5 3/8	3 1/8	1/2	1/8	1 7/16	2 19/32	2 1/32	11/16	10.00
	1 3/4	ZEF2112	4 3/8	3 3/32	4 1/2	5 5/8				1 1/2				11.20
	40.00	*ZEF2040MM*	*104.78*	*74.24*	*107.95*	*136.53*	*79.38*	*13.00*	*3.18*	*36.51*	*65.88*	*51.590*	17.46	*4.50*
	45.00	*ZEF2045MM*	*111.13*	*78.59*	*114.30*	*142.88*				*38.10*				*5.00*
6	1 15/16	ZEF2115	4 3/8	3 3/32	4 1/2	5 5/8	3 1/8	1/2	1/8	1 1/2	2 7/8	2 5/16	11/16	11.00
	2	ZEF2200												10.80
	50.00	*ZEF2050MM*	*111.13*	*78.59*	*114.30*	*142.88*	*79.38*	*13.00*	*3.18*	*38.10*	*73.03*	*58.740*	17.46	*4.90*
7	2 3/16	ZEF2203	4 7/8	3 29/64	5	6 1/4	3 5/16	5/8	1/8	1 1/2	3 1/4	2 5/8	13/16	14.10
	55.00	*ZEF2055MM*	*123.83*	*87.71*	*127.00*	*158.75*	*84.14*	*16.00*	*3.18*	*38.10*	*82.55*	*66.680*	20.64	*6.40*
8	2 7/16	ZEF2207	5 3/8	3 51/64	5 1/2	6 7/8	3 1/2	5/8	3/16	1 11/16	3 9/16	2 29/32	7/8	17.30
	2 1/2	ZEF2208												17.10
	60.00	*ZEF2060MM*	*135.53*	*96.42*	*139.70*	*174.63*	*88.90*	*16.00*	*4.76*	*42.86*	*90.49*	*73.810*	22.23	*7.80*
	65.00	*ZEF2065MM*												*7.50*
9	2 11/16	ZEF2211	6	4 1/4	6 1/2	7 3/4	4	3/4	3/16	1 13/16	4 1/16	3 3/8	7/8	28.40
	2 3/4	ZEF2212												28.20
	2 15/16	ZEF2215												27.20
	3	ZEF2300												26.90
	70.00	*ZEF2070MM*	*152.40*	*107.95*	*165.10*	*196.85*	*101.60*	*19.00*	*4.76*	*46.04*	*103.19*	*85.730*	22.23	*12.80*
	75.00	*ZEF2075MM*												*12.40*
10	3 3/16	ZEF2303	7	4 61/64	7 3/8	9 1/4	4 3/8	3/4	1/4	1 15/16	4 29/32	3 31/32	15/16	42.00
	3 7/16	ZEF2307												40.50
	3 1/2	ZEF2308												40.00
	80.00	*ZEF2080MM*	*177.80*	*125.81*	*187.33*	*234.95*	*111.13*	*19.00*	*6.35*	*49.20*	*124.62*	*100.790*	23.81	*19.00*
	85.00	*ZEF2085MM*												*18.60*
	90.00	*ZEF2090MM*												*18.10*
11	3 11/16	ZEF2311	7 3/4	5 31/64	8 7/8	10 1/4	5 1/16	7/8	1/4	2 3/16	5 5/8	4 9/16	1 1/32	64.00
	3 15/16	ZEF2315												69.00
	4	ZEF2400												68.00
	100.00	*ZEF2100MM*	*196.85*	*139.29*	*225.43*	*260.35*	*128.59*	*22.00*	*6.35*	*55.56*	*142.88*	*115.890*	26.19	*31.30*

Additional Notes

Please call 1-866-REXNORD for availability
Metric bore sizes available, see Rex Interchangeability guide
Lubrication fitting tap size, 1/8" PT
Bore size = nominal shaft size +.001 in/-.000 in *(+0.03 mm/-0.00 mm)*
Seals - To specify G, K or M seal, replace "Z" in part number with "G", "K" or "M"
Auxiliary end caps - available in all size codes

For the Selection Guide, Load Ratings and Speed Limits, see the Spherical Roller Bearings Engineering section on pages 15 - 27.
Note: Dimensions subject to change. Certified dimensions of ordered material furnished on request.

ZEF3000

Interchange: *QMF*

Photo Shows a 4-Bolt Spherical Roller Bearing Flanged Unit

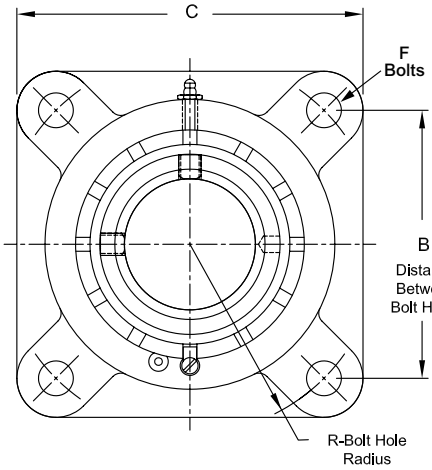

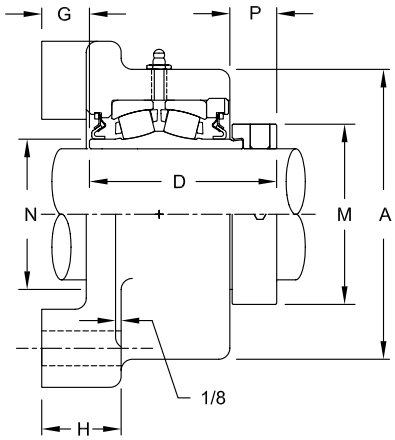

Product Features

- Corrosion-resistant powder coating
- Cast iron housing
- Misalignment capabilities - total of 4°
- Broad range of sealing options
- Factory set clearance & lubrication
- Precision ground & superfinished raceways
- Hardened eccentric locking collar
- Field interchangeable seals
- See Features and Benefits for additional info on pages 10 - 13.

Bearing Dimensions

Size Code	Shaft Diameter	Part Number	B Distance Between Bolt Holes	R Bolt Circle Radius	A	C	D	F Bolts	G	H	M	N	P	Approx. Weight
4	1 7/16	ZEF3107	3 1/2	2 15/32	3 11/16	4 5/8	2 59/64	1/2	3/4	1 3/8	2 5/16	1 3/4	25/32	7.40
5	1 11/16	ZEF3111	4 1/8	2 59/64	4 1/4	5 3/8	3 3/16	1/2	13/16	1 7/16	2 5/8	2 1/32	3/4	10.30
6	1 15/16	ZEF3115	4 3/8	3 3/32	4 1/2	5 3/8	3 9/32	1/2	7/8	1 1/2	2 3/4	2 5/16	27/32	11.20
7	2 3/16	ZEF3203	4 7/8	3 29/64	5	6 1/4	3 1/2	5/8	15/16	1 1/2	3 1/4	2 5/8	31/32	11.00
8	2 7/16	ZEF3207	5 3/8	3 51/64	5 1/2	6 7/8	3 21/32	5/8	1 1/16	1 11/16	3 9/16	2 29/32	1 1/64	17.50
	2 1/2	ZEF3208												16.50
9	2 11/16	ZEF3211	6	4 1/4	6 1/2	7 3/4	4 13/64	3/4	1 1/16	1 13/16	4 1/16	3 3/8	1 1/64	28.60
	2 15/16	ZEF3215												27.60
10	3 7/16	ZEF3307	7	4 61/64	7 3/8	9 1/4	4 37/64	3/4	1 11/64	1 15/16	4 15/16	3 31/32	1 9/64	41.10
	3 1/2	ZEF3308												40.20
11	3 15/16	ZEF3315	7 3/4	5 31/64	8 7/8	10 1/4	5 3/16	7/8	1 5/16	2 3/16	5 5/8	4 9/16	1 1/16	62.70

Additional Notes

- Please call 1-866-REXNORD for availability
- Lubrication fitting tap size, 1/8" PT
- Bore size = nominal shaft size +.001 in/-.000 in *(+0.03 mm/-0.00 mm)*
- Seals - To specify G, K or M seal, replace “Z” in part number with “G”, “K” or “M”
- Auxiliary end caps - available in all size codes

For the Selection Guide, Load Ratings and Speed Limits, see the Spherical Roller Bearings Engineering section on pages 15 - 27.

Note: Dimensions subject to change. Certified dimensions of ordered material furnished on request.

ZEF5000

Interchange: *RFB, QAAF*

Photo Shows a 4-Bolt Spherical Roller Bearing Flanged Unit

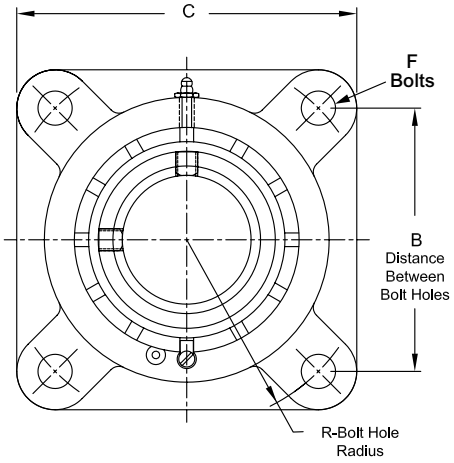

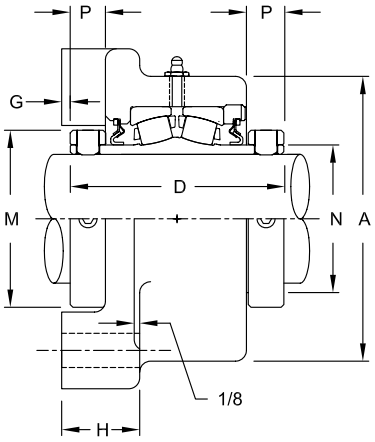

Product Features

- Corrosion-resistant powder coating
- Cast iron housing
- Misalignment capabilities - total of 4°
- Broad range of sealing options
- Factory set clearance & lubrication
- Precision ground & superfinished raceways
- Two hardened spring locking collars
- Field interchangeable seals
- See Features and Benefits for additional info on pages 10 - 13.

Bearing Dimensions

Size Code	Shaft Diameter	Part Number	B Distance Between Bolt Holes	R Bolt Circle Radius	A	C	D	F Bolts	G	H	M	N	P	Approx. Weight
4	1 7/16	ZEF5107	3 1/2	2 15/32	3 11/16	4 5/8	3 9/16	1/2	1/16	1 3/8	2 5/16	1 3/4	11/16	7.70
	35.00	*ZEF5035MM*	*88.90*	*62.69*	*93.66*	*117.48*	*90.49*	*13.00*	*1.59*	*34.93*	*58.74*	*44.450*	*17.46*	*3.50*
5	1 1/2	ZEF5108	4 1/8	2 59/64	4 1/4	5 3/8	3 13/16	1/2	1/8	1 7/16	2 19/32	2 1/32	11/16	11.00
	1 11/16	ZEF5111												10.60
	40.00	*ZEF5040MM*	*104.78*	*74.24*	*107.95*	*136.53*	*96.84*	*13.00*	*3.18*	*36.51*	*65.88*	*51.590*	*17.46*	*5.00*
	45.00	*ZEF5045MM*												*4.80*
6	1 15/16	ZEF5115	4 3/8	3 3/32	4 1/2	5 5/8	3 13/16	1/2	1/8	1 1/2	2 7/8	2 5/16	11/16	11.70
	50.00	*ZEF5050MM*	*111.13*	*78.59*	*114.30*	*142.88*	*96.84*	*13.00*	*3.18*	*38.10*	*73.03*	*58.740*	*17.46*	*5.30*
7	2	ZEF5200	4 7/8	3 29/64	5	6 1/4	4 1/8	5/8	1/8	1 1/2	3 1/4	2 5/8	13/16	15.70
	2 3/16	ZEF5203												15.10
	55.00	*ZEF5055MM*	*123.83*	*87.71*	*127.00*	*158.75*	*104.78*	*16.00*	*3.18*	*38.10*	*82.60*	*66.680*	*20.64*	*6.80*
8	2 7/16	ZEF5207	5 3/8	3 51/64	5 1/2	6 7/8	4 3/8	5/8	3/16	1 11/16	3 9/16	2 29/32	7/8	18.30
	60.00	*ZEF5060MM*	*135.53*	*96.42*	*139.70*	*174.63*	*111.13*	*16.00*	*4.76*	*42.86*	*90.50*	*73.810*	*22.23*	*8.30*
	65.00	*ZEF5065MM*												*8.10*
9	2 1/2	ZEF5208	6	4 1/4	6 1/2	7 3/4	4 7/8	3/4	3/16	1 13/16	4 1/16	3 3/8	7/8	31.10
	2 11/16	ZEF5211												30.10
	2 15/16	ZEF5215												29.60
	70.00	*ZEF5070MM*	*152.40*	*107.95*	*165.10*	*196.85*	*123.83*	*19.00*	*4.76*	*46.04*	*103.20*	*85.730*	*22.23*	*13.70*
	75.00	*ZEF5075MM*												*13.40*
10	3 3/16	ZEF5303	7	4 61/64	7 3/8	9 1/4	5 5/16	3/4	1/4	1 15/16	4 29/32	3 31/32	15/16	44.60
	3 7/16	ZEF5307												42.70
	80.00	*ZEF5080MM*	*177.80*	*125.81*	*187.33*	*234.95*	*134.94*	*19.00*	*6.35*	*49.20*	*124.62*	*100.790*	*23.81*	*20.20*
	85.00	*ZEF5085MM*												*19.80*
	90.00	*ZEF5090MM*												*19.40*
11	3 11/16	ZEF5311	7 3/4	5 31/64	8 7/8	10 1/4	6 1/8	7/8	1/4	2 3/16	5 5/8	4 9/16	1 1/32	66.50
	3 15/16	ZEF5315												65.50
	4	ZEF5400												64.50
	100.00	*ZEF5100MM*	*196.85*	*139.29*	*225.43*	*260.35*	*155.58*	*22.00*	*6.35*	*55.56*	*142.90*	*115.890*	*26.19*	*29.70*

Additional Notes

- Please call 1-866-REXNORD for availability
- Metric bore sizes available, see Rex Interchangeability guide
- Lubrication fitting tap size, 1/8" PT
- Bore size = nominal shaft size +.001 in/-.000 in *(+0.03 mm/-0.00 mm)*
- Seals - To specify G, K or M seal, replace "Z" in part number with "G", "K" or "M"
- Auxiliary end caps - available in all size codes

For the Selection Guide, Load Ratings and Speed Limits, see the Spherical Roller Bearings Engineering section on pages 15 - 27.

Note: Dimensions subject to change. Certified dimensions of ordered material furnished on request.

ZEF6000

Interchange: *EF4BIP, USFBE5000A, QVF, QVVF, DVF*

Photo Shows a 4-Bolt Spherical Roller Bearing Flanged Unit

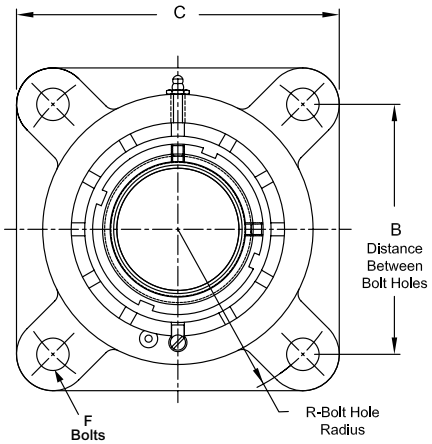

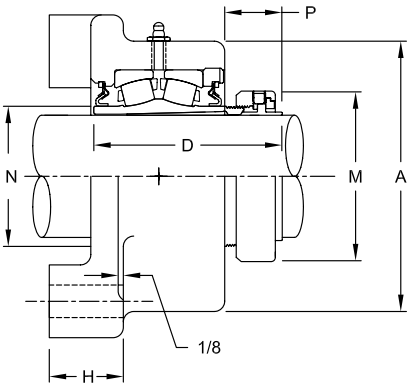

Product Features

- Spyglass Optical Strain Sensor (OSS) Technology
- Positive locking system
- Tapered adapter sleeve
- Corrosion-resistant powder coating
- Cast iron housing
- Misalignment capabilities - total of 4°
- Broad range of sealing options
- Factory set clearance & lubrication
- Precision ground & superfinished raceways
- See Features and Benefits for additional info on pages 10 - 13.

Bearing Dimensions

Size Code	Shaft Diameter	Part Number	B Distance Between Bolt Holes	R Bolt Circle Radius	A	C	D	F Bolts	H	M	N	P	Approx. Weight
							4-Bolt						
4	1 7/16	ZEF6107	3 1/2	2 15/32	3 11/16	4 5/8	3 21/64	1/2	1 3/8	2 25/64	1 3/4	1 9/64	7.20
5	1 11/16	ZEF6111	4 1/8	2 59/64	4 1/4	5 3/8	3 47/64		1 7/16	2 41/64	2 1/32	1 9/32	10.00
6	1 15/16	ZEF6115	4 3/8	3 3/32	4 1/2	5 5/8	3 41/64		1 1/2	2 55/64	2 5/16	1 1/8	11.70
	45.00	*ZEF6045MM*	*111.13*	*78.59*	*114.30*	*142.88*	*92.47*	*13.00*	*38.10*	*72.63*	*58.740*	*28.58*	*4.80*
7	2 3/16	ZEF6203	4 7/8	3 29/64	5	6 1/4	3 11/16	5/8	1 1/2	3 15/64	2 5/8	1 5/32	15.70
	55.00	*ZEF6055MM*	*123.83*	*87.71*	*127.00*	*158.75*	*93.66*	*16.00*	*38.10*	*82.15*	*66.680*	*29.37*	*6.80*
8	2 3/8	ZEF6206	5 3/8	3 51/64	5 1/2	6 7/8	4 1/16	5/8	1 11/16	3 19/32	2 29/32	1 27/64	18.90
	2 7/16	ZEF6207											18.30
	60.00	*ZEF6060MM*	*135.53*	*96.42*	*139.70*	*174.63*	*103.19*	*16.00*	*42.86*	*91.28*	*73.810*	*36.12*	*8.30*
9	2 11/16	ZEF6211	6	4 1/4	6 1/2	7 3/4	4 17/32	3/4	1 13/16	4 3/32	3 3/8	1 25/64	31.10
	2 3/4	ZEF6212											30.10
	2 15/16	ZEF6215											29.60
	70.00	*ZEF6070MM*	*152.40*	*107.95*	*165.10*	*196.85*	*115.09*	*19.00*	*46.04*	*103.98*	*85.730*	*35.32*	*13.70*
	75.00	*ZEF6075MM*											*13.40*
10	3 3/16	ZEF6303	7	4 61/64	7 3/8	9 1/4	5 1/32	3/4	1 15/16	4 61/64	3 31/32	1 19/32	44.60
	3 7/16	ZEF6307											42.70
	80.00	*ZEF6080MM*	*177.80*	*125.81*	*187.33*	*234.95*	*127.79*	*19.00*	*49.20*	*125.81*	*100.790*	*40.48*	*20.20*
	85.00	*ZEF6085MM*											*19.80*
11	3 11/16	ZEF6311	7 3/4	5 31/64	8 7/8	10 1/4	5 25/32	7/8	2 3/16	5 43/64	4 9/16	1 47/64	66.50
	3 15/16	ZEF6315											65.50
	90.00	*ZEF6090MM*	*196.85*	*139.29*	*225.43*	*260.35*	*146.84*	*22.00*	*55.56*	*144.07*	*115.890*	*44.05*	*29.70*
	100.00	*ZEF6100MM*											

Additional Notes

- Please call 1-866-REXNORD for availability
- Lubrication fitting tap size, 1/8" PT
- Seals - To specify G, K or M seal, replace “Z” in part number with “G”, “K” or “M”
- Auxiliary end caps - available in all size codes
- For the Selection Guide, Load Ratings and Speed Limits, see the Spherical Roller Bearings Engineering section on pages 15 - 27.
- Note: Dimensions subject to change. Certified dimensions of ordered material furnished on request.

ZEF9000

Photo Shows a 4-Bolt Spherical Roller Bearing Flanged Unit

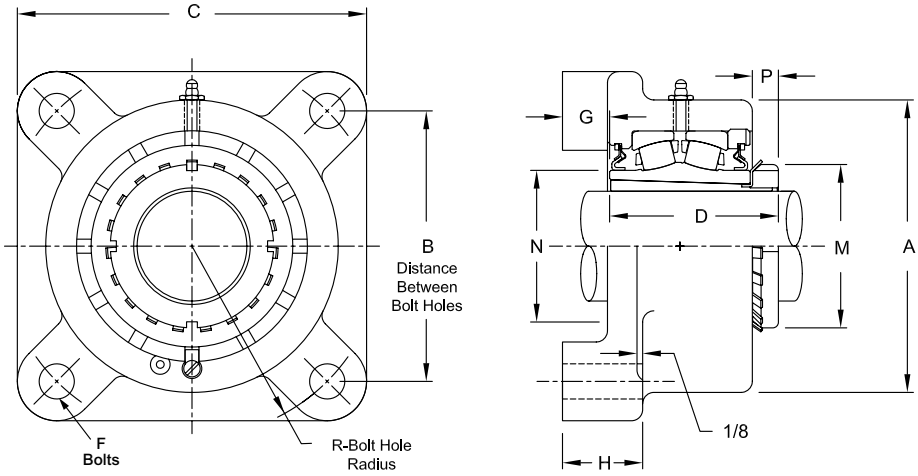

Product Features

- Corrosion-resistant powder coating
- Cast iron housing
- Misalignment capabilities - total of 4°
- Broad range of sealing options
- Factory set clearance & lubrication
- Precision ground & superfinished raceways
- Enhanced life mounting style
- Field interchangeable seals
- See Features and Benefits for additional info on pages 10 - 13.

Bearing Dimensions

Size Code	Shaft Diameter	Part Number	B Distance Between Bolt Holes	R Bolt Circle Radius	A	C	D	F Bolts	G	H	M	N	P	Approx. Weight
7	1 15/16	ZEF9115	4 7/8	3 29/64	5	6 1/4	3 5/32	5/8	15/16	1 1/2	2 31/32	2 5/8	19/32	14.30
	2	ZEF9200												14.20
	45.00	*ZEF9045MM*	*123.83*	*87.71*	*127.00*	*158.75*	*80.17*	*16.00*	*23.81*	*38.10*	*75.40*	*66.680*	*15.08*	*6.50*
	50.00	*ZEF9050MM*												
8	2 3/16	ZEF9203	5 3/8	3 51/64	5 1/2	6 7/8	3 11/32	5/8	1 1/16	1 11/16	3 3/8	2 29/32	23/32	17.60
	55.00	*ZEF9055MM*	*135.53*	*96.42*	*139.70*	*174.63*	*84.93*	*16.00*	*26.99*	*42.86*	*85.73*	*73.810*	*18.26*	*8.00*
9	2 7/16	ZEF9207	6	4 1/4	6 1/2	7 3/4	3 3/4	3/4	1 1/16	1 13/16	3 5/8	3 3/8	5/8	27.70
	2 1/2	ZEF9208												27.40
10	2 11/16	ZEF9211	7	4 61/64	7 3/8	9 1/4	4 1/4	3/4	1 11/64	1 15/16	4 13/32	3 31/32	13/16	42.30
	2 15/16	ZEF9215												41.10
	3	ZEF9300												40.40
	75.00	*ZEF9075MM*	*177.80*	*125.81*	*187.33*	*234.95*	*107.95*	*19.00*	*29.77*	*49.20*	*111.92*	*100.790*	*20.64*	*18.60*
11	3 3/16	ZEF9303	7 3/4	5 31/64	8 7/8	10 1/4	5	7/8	1 5/16	2 3/16	5 3/16	4 9/16	15/16	67.00
	3 7/16	ZEF9307												65.00
	80.00	*ZEF9080MM*	*196.85*	*139.29*	*225.43*	*260.35*	*127.00*	*22.00*	*33.34*	*55.56*	*131.76*	*115.890*	*23.81*	*30.40*

Additional Notes

- Please call 1-866-REXNORD for availability
- Lubrication fitting tap size, 1/8" PT
- Seals - To specify G, K or M seal, replace “Z” in part number with “G”, “K” or “M”
- Auxiliary end caps - available in all size codes
- For the Selection Guide, Load Ratings and Speed Limits, see the Spherical Roller Bearings Engineering section on pages 15 - 27.
- Note: Dimensions subject to change. Certified dimensions of ordered material furnished on request.

ZBR2000

Interchange: *FCS2, FCE, FYRP, USFC5000, USFCE5000, RFPA, QACW, EPFTRB*

Photo Shows a 4-Bolt Spherical Roller Bearing Flanged Cartridge Unit

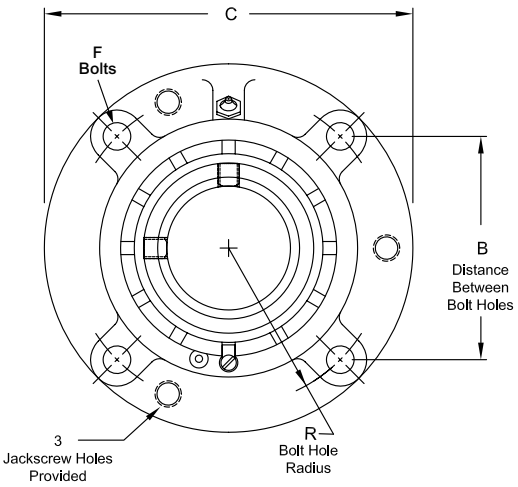

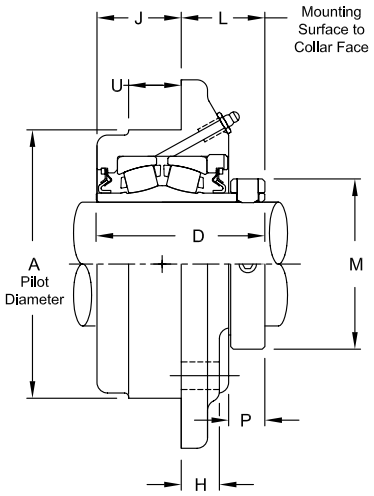

Product Features

- Corrosion-resistant powder coating
- Cast iron housing
- Misalignment capabilities - total of 4°
- Broad range of sealing options
- Factory set clearance & lubrication
- Precision ground & superfinished raceways
- Hardened spring locking collar
- Field interchangeable seals
- See Features and Benefits for additional info on pages 10 - 13.

Bearing Dimensions

Size Code	Shaft Diameter	Part Number	A Pilot Diameter	B Distance Between Bolt Holes	L Mounting Surface to Collar Face	R Bolt Circle Radius	C	D	F Bolts	H	J	M	P	U	Approx. Weight
						4-Bolt									
2	3/4	ZBR2012	3.000	2 9/16	1 5/16	1 13/16	4 3/8	2 9/16	5/16	7/16	1 1/4	1 3/4	9/16	5/8	3.70
	15/16	ZBR2015													3.60
	1	ZBR2100													3.50
	25.00	*ZBR2025MM*	*76.200*	*65.09*	*33.34*	*46.04*	*111.13*	*65.09*	*8.00*	*11.11*	*31.75*	*44.45*	*14.29*	*15.88*	*1.60*
3	1 1/8	ZBR2102	3.375	2 59/64	1 5/16	2 1/16	5	2 11/16	3/8	7/16	1 3/8	1 31/32	9/16	3/4	4.90
	1 3/16	ZBR2103													4.80
	1 1/4	ZBR2104													4.60
	30.00	*ZBR2030MM*	*85.725*	*74.19*	*33.34*	*52.39*	*127.00*	*68.26*	*9.00*	*11.11*	*34.93*	*50.00*	*14.29*	*19.05*	*2.20*
4	1 7/16	ZBR2107	3.625	3 3/32	1 1/2	2 3/16	5 1/4	2 7/8	3/8	1/2	1 3/8	2 5/16	11/16	3/4	5.40
	1 1/2	ZBR2108													5.20
	35.00	*ZBR2035MM*	*92.075*	*53.19*	*38.10*	*55.56*	*133.35*	*73.02*	*9.00*	*12.70*	*34.93*	*58.74*	*17.46*	*19.05*	*2.50*
5	1 11/16	ZBR2111	4.250	3 5/8	1 19/32	2 9/16	6 1/8	3 1/8	7/16	1/2	1 17/32	2 19/32	11/16	7/8	8.40
	1 3/4	ZBR2112													8.10
	40.00	*ZBR2040MM*	*107.950*	*92.08*	*40.49*	*65.09*	*155.58*	*79.38*	*11.00*	*12.70*	*38.89*	*65.88*	*17.46*	*22.23*	*3.90*
	45.00	*ZBR2045MM*													*3.70*
6	1 15/16	ZBR2115	4.500	3 51/64	1 9/16	2 11/16	6 3/8	3 1/8	7/16	9/16	1 9/16	2 7/8	11/16	7/8	8.80
	2	ZBR2200													8.70
	50.00	*ZBR2050MM*	*114.300*	*96.44*	*39.69*	*68.26*	*161.93*	*79.38*	*11.00*	*14.29*	*39.69*	*73.03*	*17.46*	*22.23*	*4.00*
7	2 3/16	ZBR2203	5.000	4 1/4	1 3/4	3	7 1/8	3 5/16	1/2	9/16	1 9/16	3 1/4	13/16	1	13.80
	2 1/4	ZBR2204													13.70
	55.00	*ZBR2055MM*	*127.000*	*107.95*	*44.45*	*76.20*	*180.98*	*84.14*	*13.00*	*14.29*	*39.69*	*82.55*	*19.84*	*25.40*	*6.30*
8	2 3/8	ZBR2206	5.500	4 19/32	1 13/16	3 1/4	7 5/8	3 1/2	1/2	5/8	1 11/16	3 9/16	7/8	1	14.90
	2 7/16	ZBR2207													14.80
	2 1/2	ZBR2208													14.40
	60.00	*ZBR2060MM*	*139.700*	*116.66*	*46.04*	*82.55*	*193.68*	*88.90*	*13.00*	*15.88*	*42.86*	*90.49*	*22.23*	*25.40*	*6.80*
	65.00	*ZBR2065MM*													*6.50*
9	2 11/16	ZBR2211	6.375	5 19/64	2	3 3/4	8 3/4	4	5/8	3/4	2	4 1/16	7/8	1 1/4	23.40
	2 3/4	ZBR2212													23.00
	2 15/16	ZBR2215													22.30
	3	ZBR2300													21.80
	70.00	*ZBR2070MM*	*161.925*	*134.54*	*50.80*	*95.25*	*222.25*	*101.60*	*16.00*	*19.05*	*50.80*	*103.19*	*22.23*	*31.75*	*10.50*
	75.00	*ZBR2075MM*													*10.10*
10	3 3/16	ZBR2303	7.375	6 3/32	2 3/8	4 5/16	10 1/4	4 3/8	3/4	15/16	2	4 29/32	15/16	1 1/4	35.50
	3 7/16	ZBR2307													34.00

Continued...

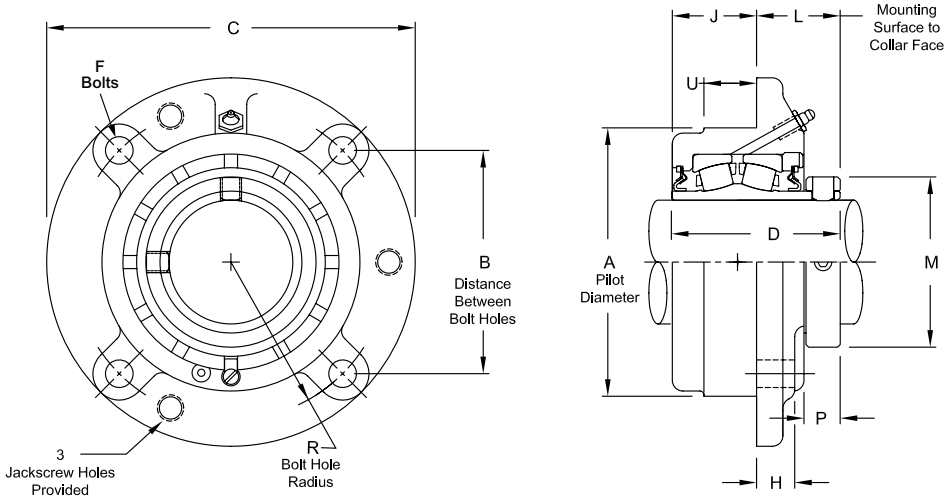

Continued...

Bearing Dimensions

Size Code	Shaft Diameter	Part Number	A Pilot Diameter	B Distance Between Bolt Holes	L Mounting Surface to Collar Face	R Bolt Circle Radius	C	D	F Bolts	H	J	M	P	U	Approx. Weight
4-Bolt (continued)															
10	3 1/2	ZBR2308	7.375	6 3/32	2 3/8	4 5/16	10 1/4	4 3/8	3/4	15/16	2	4 29/32	15/16	1 1/4	33.50
	80.00	*ZBR2080MM*	*187.325*	*154.79*	*60.33*	*109.54*	*260.35*	*111.13*	*19.00*	*23.81*	*50.80*	*124.62*	*23.81*	*31.75*	*16.10*
	85.00	*ZBR2085MM*													*15.70*
	90.00	*ZBR2090MM*													*15.20*
11	3 11/16	ZBR2311	8.125	6 5/8	2 11/16	4 11/16	10 7/8	5 1/16	3/4	1 1/8	2 1/2	5 5/8	1 1/32	1 1/2	52.00
	3 15/16	ZBR2315													49.00
	4	ZBR2400													48.50
	100.00	*ZBR2100MM*	*206.375*	*168.28*	*68.26*	*119.06*	*276.23*	*128.59*	*19.00*	*28.58*	*63.50*	*142.88*	*26.19*	*38.10*	*22.20*

Additional Notes

Please call 1-866-REXNORD for availability
Metric bore sizes available, see Rex Interchangeability guide
Lubrication fitting tap size, 1/8" PT
Bore size = nominal shaft size +.001 in/-.000 in *(+0.03 mm/-0.00 mm)*
Pilot Diameter tolerance, +.000 in/-.002 in *(+0.00 mm/-0.05 mm)*
Bore tolerance for mounting, +.002 in/-.000 in *(+0.05 mm/-0.00 mm)*
Seals - To specify G, K or M seal, replace "Z" in part number with "G", "K" or "M"

Auxiliary end caps - available in all size codes except for size codes 2 & 3
"G" seals available in size codes 3 thru 11
For the Selection Guide, Load Ratings and Speed Limits, see the Spherical Roller Bearings Engineering section on pages 15 - 27.
Note: Dimensions subject to change. Certified dimensions of ordered material furnished on request.

ZBR3000

Interchange: *QMCW*

Photo Shows a 4-Bolt Spherical Roller Bearing Flanged Cartridge Unit

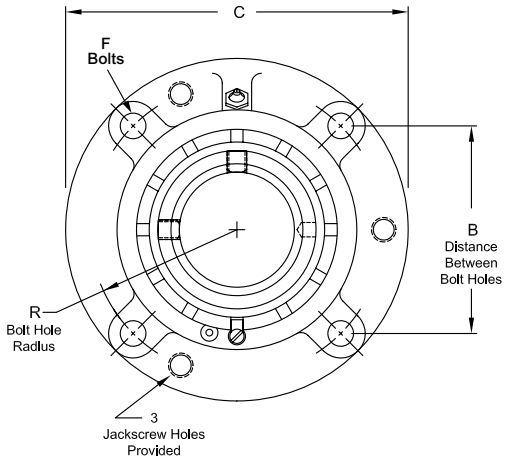

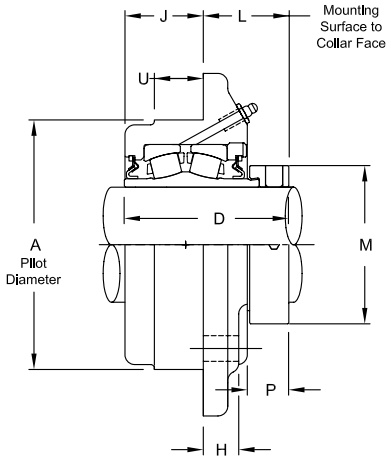

Product Features

- Corrosion-resistant powder coating
- Cast iron housing
- Misalignment capabilities - total of 4°
- Broad range of sealing options
- Factory set clearance & lubrication
- Precision ground & superfinished raceways
- Eccentric locking collar
- Field interchangeable seals
- See Features and Benefits for additional info on pages 10 - 13.

Bearing Dimensions

Size Code	Shaft Diameter	Part Number	A Pilot Diameter	B Distance Between Bolt Holes	L Mounting Surface to Collar Face	R Bolt Circle Radius	C	D	F Bolts	H	J	M	P	U	Approx. Weight
						4-Bolt									
4	1 7/16	ZBR3107	3.625	3 3/32	1 1/2	2 3/16	5 1/4	2 59/64	3/8	1/2	1 3/8	2 5/16	25/32	3/4	5.60
5	1 11/16	ZBR3111	4.250	3 5/8	1 19/32	2 9/16	6 1/8	3 3/16	7/16	1/2	1 17/32	2 5/8	3/4	7/8	8.60
6	1 15/16	ZBR3115	4.500	3 51/64	1 23/32	2 11/16	6 3/8	3 9/32	7/16	9/16	1 9/16	2 15/16	27/32	7/8	9.00
7	2 3/16	ZBR3203	5.000	4 1/4	1 15/16	3	7 1/8	3 1/2	1/2	9/16	1 9/16	3 1/4	31/32	1	14.10
8	2 7/16	ZBR3207	5.500	4 19/32	1 31/32	3 1/4	7 5/8	3 21/32	1/2	5/8	1 11/16	3 9/16	1 1/64	1	15.00
	2 1/2	ZBR3208													14.60
9	2 11/16	ZBR3211	6.375	5 19/64	2 13/64	3 3/4	8 3/4	4 13/64	5/8	3/4	2	4 1/16	1 1/64	1 1/4	23.80
	2 15/16	ZBR3215													22.70
10	3 7/16	ZBR3307	7.375	6 3/32	2 37/64	4 5/16	10 1/4	4 37/64	3/4	15/16	2	4 15/16	1 9/64	1 1/4	34.40
	3 1/2	ZBR3308													33.90
11	3 15/16	ZBR3315	8.125	6 5/8	2 11/16	4 11/16	10 7/8	5 3/16	3/4	1 1/8	2 1/2	5 5/8	1 1/16	1 1/2	49.00

Additional Notes

- Please call 1-866-REXNORD for availability
- Lubrication fitting tap size, 1/8" PT
- Bore size = nominal shaft size +.001 in/-.000 in *(+0.03 mm/-0.00 mm)*
- Pilot Diameter tolerance, +.000 in/-.002 in *(+0.00 mm/-0.05 mm)*
- Bore tolerance for mounting, +.002 in/-.000 in *(+0.05 mm/-0.00 mm)*
- Seals - To specify G, K or M seal, replace “Z” in part number with “G”, “K” or “M”
- Auxiliary end caps - available in all size codes

For the Selection Guide, Load Ratings and Speed Limits, see the Spherical Roller Bearings Engineering section on pages 15 - 27.

Note: Dimensions subject to change. Certified dimensions of ordered material furnished on request.

ZBR5000

Interchange: *RFP, QAACW*

Photo Shows a 4-Bolt Spherical Roller Bearing Flanged Cartridge Unit

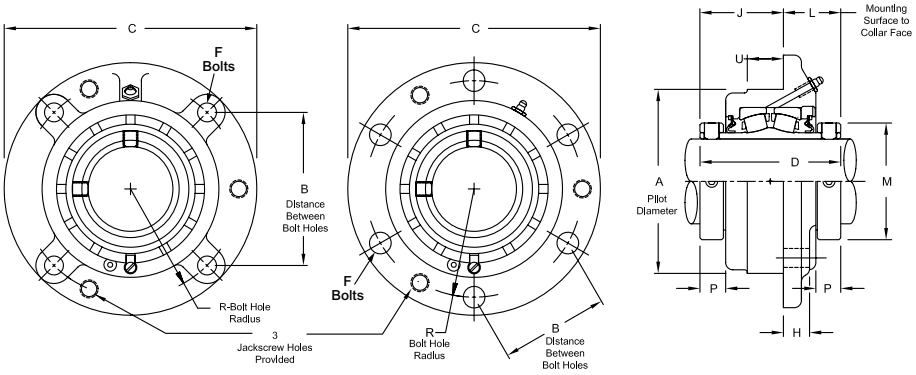

Product Features

- Corrosion-resistant powder coating
- Cast iron housing
- Misalignment capabilities - total of 4°
- Broad range of sealing options
- Factory set clearance & lubrication
- Precision ground & superfinished raceways
- Two hardened spring locking collars
- Field interchangeable seals
- See Features and Benefits for additional info on pages 10 - 13.

Bearing Dimensions

Size Code	Shaft Diameter	Part Number	A Pilot Diameter	B Distance Between Bolt Holes	L Mounting Surface to Collar Face	R Bolt Circle Radius	C	D	F Bolts	H	J	M	P	U	Approx. Weight
						4-Bolt									
4	1 7/16	ZBR5107	3.625	53.19	1 1/2	2 3/16	5 1/4	3 9/16	3/8	1/2	2 1/16	2 5/16	11/16	3/4	5.90
	35.00	*ZBR5035MM*	*92.075*	*53.19*	*38.10*	*55.56*	*133.35*	*90.49*	*9.00*	*12.70*	*52.39*	*58.74*	*17.46*	*19.05*	*2.70*
5	1 1/2	ZBR5108	4.250	3 5/8	1 19/32	2 9/16	6 1/8	3 13/16	7/16	1/2	2 7/32	2 19/32	11/16	7/8	9.10
	1 11/16	ZBR5111													8.70
	40.00	*ZBR5040MM*	*107.950*	*92.08*	*40.49*	*65.09*	*155.58*	*96.84*	*11.00*	*12.70*	*56.34*	*65.88*	*17.46*	*22.23*	*4.10*
	45.00	*ZBR5045MM*													*3.90*
6	1 15/16	ZBR5115	4.500	3 51/64	1 9/16	2 11/16	6 3/8	3 13/16	7/16	9/16	2 1/4	2 7/8	11/16	7/8	9.60
	50.00	*ZBR5050MM*	*114.300*	*96.44*	*39.69*	*68.26*	*161.93*	*96.84*	*11.00*	*14.29*	*57.15*	*73.03*	*17.46*	*22.23*	*3.40*
7	2	ZBR5200	5.000	4 1/4	1 3/4	3	7 1/8	4 1/8	1/2	9/16	2 3/8	3 1/4	13/16	1	13.70
	2 3/16	ZBR5203													13.00
	55.00	*ZBR5055MM*	*127.000*	*107.95*	*44.45*	*76.20*	*180.98*	*104.78*	*13.00*	*14.29*	*60.33*	*82.60*	*20.64*	*25.40*	*5.90*
8	2 7/16	ZBR5207	5.500	4 19/32	1 13/16	3 1/4	7 5/8	4 3/8	1/2	5/8	2 9/16	3 9/16	7/8	1	15.90
	60.00	*ZBR5060MM*	*139.700*	*116.66*	*46.04*	*82.55*	*193.68*	*111.13*	*13.00*	*15.88*	*65.09*	*90.50*	*22.23*	*25.40*	*7.20*
	65.00	*ZBR5065MM*													*7.00*
9	2 1/2	ZBR5208	6.375	5 19/64	2	3 3/4	8 3/4	4 7/8	5/8	3/4	2 7/8	4 1/16	7/8	1 1/4	26.10
	2 11/16	ZBR5211													24.80
	2 15/16	ZBR5215													22.70
	70.00	*ZBR5070MM*	*161.925*	*134.54*	*50.80*	*95.25*	*222.25*	*123.83*	*16.00*	*19.05*	*73.03*	*103.20*	*22.23*	*31.75*	*11.20*
	75.00	*ZBR5075MM*													*10.30*
10	3 3/16	ZBR5303	7.375	6 3/32	2 3/8	4 5/16	10 1/4	5 5/16	3/4	15/16	2 15/16	4 29/32	15/16	1 1/4	38.00
	3 7/16	ZBR5307													36.50
	80.00	*ZBR5080MM*	*187.325*	*154.79*	*60.33*	*109.54*	*260.35*	*134.94*	*19.00*	*23.81*	*74.62*	*124.62*	*23.81*	*31.75*	*17.20*
	85.00	*ZBR5085MM*													*17.10*
	90.00	*ZBR5090MM*													*17.00*
11	3 11/16	ZBR5311	8.125	6 5/8	2 11/16	4 11/16	10 7/8	6 1/8	3/4	1 1/8	3 9/16	5 5/8	1 1/32	1 1/2	56.00
	3 15/16	ZBR5315													53.00
	4	ZBR5400													52.00
	100.00	*ZBR5100MM*	*206.375*	*168.28*	*68.26*	*119.06*	*276.23*	*155.58*	*19.00*	*28.58*	*90.48*	*142.90*	*26.19*	*38.10*	*24.00*
						6-Bolt									
12	4 7/16	ZBR5407Y	10.250	5 7/8	2 5/16	5 7/8	13 1/2	6 1/4	3/4	1	3 15/16	6 3/16	1 1/16	2	84.00
	4 1/2	ZBR5408Y													83.00
	110.00	*ZBR5110MM*	*260.350*	*149.23*	*58.74*	*149.23*	*342.90*	*158.75*	*19.00*	*25.40*	*100.01*	*157.16*	*26.99*	*50.80*	*39.00*
	115.00	*ZBR5115MM*													*38.00*
13	4 15/16	ZBR5415	11.000	6 3/8	2 31/32	6 3/8	14 3/4	7 7/8	7/8	1 1/4	4 29/32	7 1/16	1 5/32	2 1/4	128.00
	5	ZBR5500													125.00

Continued...

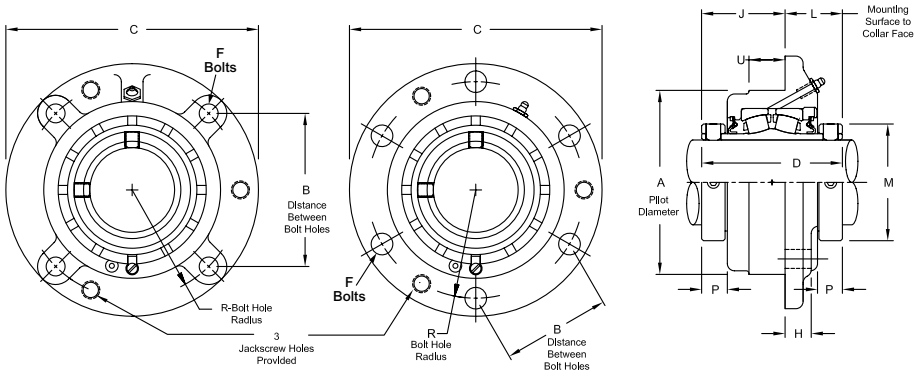

Continued...

Bearing Dimensions

Size Code	Shaft Diameter	Part Number	A Pilot Diameter	B Distance Between Bolt Holes	L Mounting Surface to Collar Face	R Bolt Circle Radius	C	D	F Bolts	H	J	M	P	U	Approx. Weight
6-Bolt (continued)															
13	*125.00*	*ZBR5125MM*	*279.400*	*161.93*	*75.41*	*161.93*	*374.65*	*200.03*	*22.00*	*31.75*	*124.61*	*179.39*	*29.37*	*57.15*	*58.00*
	130.00	*ZBR5130MM*													*57.00*
14	5 7/16	ZBR5507	13.000	7 1/4	3 7/32	7 1/4	17	8	7/8	1 3/8	4 25/32	8 3/16	1 7/32	2	184.00
	140.00	*ZBR5140MM*	*330.200*	*184.15*	*81.73*	*184.15*	*431.80*	*203.20*	*22.00*	*34.93*	*121.44*	*207.96*	*30.96*	*50.80*	*83.40*
15	5 15/16	ZBR5515	14.000	8 1/4	3 1/16	8 1/4	19	8 1/8	7/8	1	5 1/16	8 5/8	1 5/32	1 3/8	214.00
	6	ZBR5600													213.00
	150.00	*ZBR5150MM*	*355.600*	*209.55*	*77.79*	*209.55*	*482.60*	*206.38*	*22.00*	*25.40*	*128.59*	*219.08*	*29.37*	*34.93*	*97.00*
	160.00	*ZBR5160MM*													*95.00*
16	6 7/16	ZBR5607	15.000	8 1/2	3 3/8	8 1/2	19	8 3/4	1	1	5 3/8	9 23/32	1 9/32	1 1/2	246.00
	6 15/16	ZBR5615													241.00
	7	ZBR5700													239.00
	180.00	*ZBR5180MM*	*381.000*	*215.90*	*85.73*	*215.90*	*482.60*	*222.25*	*25.00*	*25.40*	*136.53*	*246.86*	*32.54*	*38.10*	*108.00*

Additional Notes

Please call 1-866-REXNORD for availability

Metric bore sizes available, see Rex Interchangeability guide

Lubrication fitting tap size: for size code 4 thru 11, 1/8" PT: for all other size codes, 1/4" PT

Bore size = nominal shaft size +.001 in/-.000 in *(+0.03 mm/-0.00 mm)*

Pilot Diameter tolerance, +.000 in/-.002 in *(+0.00 mm/-0.05 mm)* for size codes 4 thru 13

Pilot Diameter tolerance, +.000"/-.005" for size codes 14 thru 16

Bore tolerance for mounting, +.002 in/-.000 in *(+0.05 mm/-0.00 mm)* for size codes 4 thru 13

Bore tolerance for mounting, +.005"/-.000" for size codes 14 thru 16

Seals - To specify G, K or M seal, replace "Z" in part number with "G", "K" or "M"

"G" seals only available in size codes 4 thru 13

"K" seals only available in size codes 4 thru 11

Auxiliary end caps - available in all size codes

For the Selection Guide, Load Ratings and Speed Limits, see the Spherical Roller Bearings Engineering section on pages 15 - 27.

Note: Dimensions subject to change. Certified dimensions of ordered material furnished on request.

ZBR6000

Interchange: *FCIP, USFC5000A, USFCE5000A, QVCW, QVVCW*

Photo Shows a 4-Bolt Spherical Roller Bearing Flanged Cartridge Unit

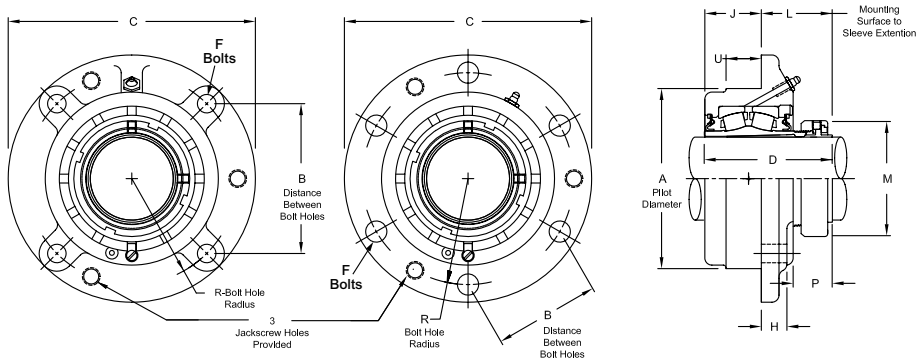

Product Features

- Spyglass Optical Strain Sensor (OSS) Technology
- Positive locking system
- Tapered adapter sleeve
- Corrosion-resistant powder coating
- Cast iron housing
- Misalignment capabilities - total of 4°
- Broad range of sealing options
- Factory set clearance & lubrication
- Precision ground & superfinished raceways
- See Features and Benefits for additional info on pages 10 - 13.

Bearing Dimensions

Size Code	Shaft Diameter	Part Number	A Pilot Diameter	B Distance Between Bolt Holes	L Mounting Surface to Collar Face	R Bolt Circle Radius	C	D	F Bolts	H	J	M	P	U	Approx. Weight
4-Bolt															
4	1 7/16	ZBR6107	3.625	3 3/32	1 61/64	2 3/16	5 1/4	3 21/64	3/8	1/2	1 3/8	2 25/64	1 9/64	3/4	5.40
5	1 11/16	ZBR6111	4.250	3 5/8	2 3/16	2 9/16	6 1/8	3 47/64	7/16	1/2	1 17/32	2 41/64	1 9/32	7/8	8.40
6	1 15/16	ZBR6115	4.500	3 51/64	2	2 11/16	6 3/8	3 41/64	7/16	9/16	1 9/16	2 55/64	1 1/8	7/8	9.60
	45.00	*ZBR6045MM*	*114.300*	*96.44*	*50.80*	*68.26*	*161.93*	*92.47*	*11.00*	*14.29*	*39.69*	*72.63*	*28.58*	*22.23*	*4.40*
7	2 3/16	ZBR6203	5.000	4 1/4	2 7/64	3	7 1/8	3 11/16	1/2	9/16	1 9/16	3 15/64	1 5/32	1	13.70
	55.00	*ZBR6055MM*	*127.000*	*107.95*	*53.57*	*76.20*	*180.98*	*93.66*	*13.00*	*14.29*	*39.69*	*82.15*	*29.37*	*25.40*	*5.90*
8	2 3/8	ZBR6206	5.500	4 19/32	2 23/64	3 1/4	7 5/8	4 1/16	1/2	5/8	1 11/16	3 19/32	1 27/64	1	16.20
	2 7/16	ZBR6207													15.90
	60.00	*ZBR6060MM*	*139.700*	*116.66*	*59.92*	*82.55*	*193.68*	*103.19*	*13.00*	*15.88*	*42.86*	*91.28*	*36.12*	*25.40*	*7.20*
9	2 11/16	ZBR6211	6.375	5 19/64	2 17/32	3 3/4	8 3/4	4 17/32	5/8	3/4	2	4 3/32	1 25/64	1 1/4	26.10
	2 3/4	ZBR6212													24.80
	2 15/16	ZBR6215													22.70
	70.00	*ZBR6070MM*	*161.925*	*134.54*	*64.29*	*95.25*	*222.25*	*115.09*	*16.00*	*19.05*	*50.80*	*103.98*	*35.32*	*31.75*	*11.20*
	75.00	*ZBR6075MM*													*10.30*
10	3 3/16	ZBR6303	7.375	6 3/32	3 1/32	4 5/16	10 1/4	5 1/32	3/4	15/16	2	4 61/64	1 19/32	1 1/4	38.00
	3 7/16	ZBR6307													36.50
	80.00	*ZBR6080MM*	*187.325*	*154.79*	*76.99*	*109.54*	*260.35*	*127.79*	*19.00*	*23.81*	*50.80*	*125.81*	*40.48*	*31.75*	*17.20*
	85.00	*ZBR6085MM*													*17.10*
11	3 11/16	ZBR6311	8.125	6 5/8	3 23/64	4 11/16	10 7/8	5 25/32	3/4	1 1/8	2 1/2	5 43/64	1 47/64	1 1/2	56.00
	3 15/16	ZBR6315													53.00
	90.00	*ZBR6090MM*	*206.375*	*168.28*	*85.32*	*119.06*	*276.23*	*146.84*	*19.00*	*28.58*	*63.50*	*144.07*	*44.05*	*38.10*	*24.00*
	100.00	*ZBR6100MM*													
6-Bolt															
12	4 3/16	ZBR6403Y	10.250	5 7/8	3 3/16	5 7/8	13 1/2	6 1/4	3/4	1	3 1/16	6 1/16	1 7/8	2	84.00
	4 7/16	ZBR6407Y													83.00
	110.00	*ZBR6110MM*	*260.350*	*149.23*	*80.96*	*149.23*	*342.90*	*158.75*	*19.00*	*25.40*	*77.79*	*153.99*	*47.63*	*50.80*	*39.00*
13	4 15/16	ZBR6415	11.000	6 3/8	4 1/16	6 3/8	14 3/4	7 15/16	7/8	1 1/4	3 7/8	6 61/64	2 1/4	2 1/4	128.00
	125.00	*ZBR6125MM*	*279.400*	*161.93*	*403.19*	*161.93*	*374.65*	*201.61*	*22.00*	*31.75*	*98.43*	*176.61*	*57.15*	*57.15*	*58.00*
14	5 7/16	ZBR6507	13.000	7 1/4	5 1/16	7 1/4	17	8 49/64	7/8	1 3/8	3 7/8	8 1/64	3 3/64	2	184.00
15	5 15/16	ZBR6515	14.000	8 1/4	5 23/64	8 1/4	19	9 19/64	7/8	1	4 3/16	8 21/32	3 7/16	1 3/8	214.00
16	6 7/16	ZBR6607	15.000	8 1/2	5 53/64	8 1/2	19	10	1	1	4 1/4	9 3/4	3 43/64	1 1/2	246.00
	6 15/16	ZBR6615													241.00

Additional Notes

- Please call 1-866-REXNORD for availability
- Lubrication fitting tap size: for size code 6 thru 11, 1/8" PT: for all other size codes, 1/4" PT
- Pilot Diameter tolerance, +.000 in/-.002 in *(+0.00 mm/-0.05 mm)*
- Bore tolerance for mounting, +.002 in/-.000 in *(+0.05 mm/-0.00 mm)*
- Seals - To specify G, K or M seal, replace "Z" in part number with "G", K" or "M"
- "G" seals only available in size codes 4 thru 13
- "K" seals only available in size codes 4 thru 11
- Auxiliary end caps - available in all size codes
- For the Selection Guide, Load Ratings and Speed Limits, see the Spherical Roller Bearings Engineering section on pages 15 - 27.
- Note: Dimensions subject to change. Certified dimensions of ordered material furnished on request.

ZBR9000

Photo Shows a 4-Bolt Spherical Roller Bearing Flanged Cartridge Unit

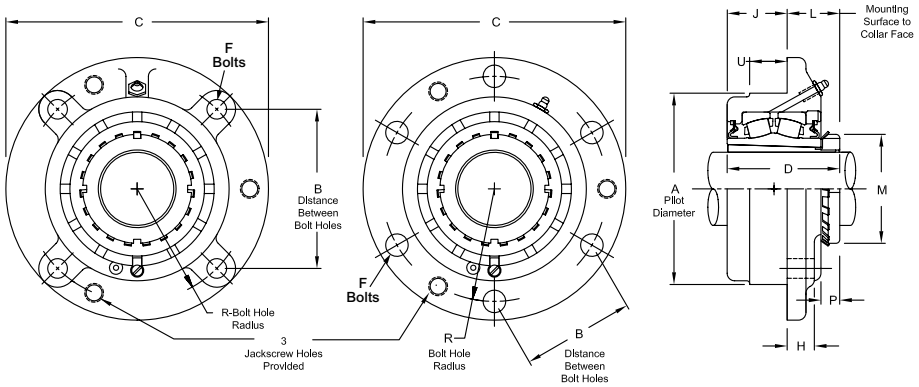

Product Features

- Corrosion-resistant powder coating
- Cast iron housing
- Misalignment capabilities - total of 4°
- Broad range of sealing options
- Factory set clearance & lubrication
- Precision ground & superfinished raceways
- Enhanced life mounting style
- Field interchangeable seals
- See Features and Benefits for additional info on pages 10 - 13.

Bearing Dimensions

Size Code	Shaft Diameter	Part Number	A Pilot Diameter	B Distance Between Bolt Holes	L Mounting Surface to Collar Face	R Bolt circle Radius	C	D	F Bolts	H	J	M	P	U	Approx. Weight
4-Bolt															
7	1 15/16	ZBR9115	5.000	4 1/4	1 19/32	3	7 1/8	3 5/32	1/2	9/16	1 9/16	2 31/32	19/32	1	12.20
	2	ZBR9200													12.10
	45.00	*ZBR9045MM*	*127.000*	*107.95*	*40.49*	*76.20*	*180.98*	*80.17*	*13.00*	*14.29*	*39.69*	*75.40*	*15.08*	*25.40*	*5.50*
	50.00	*ZBR9050MM*													*5.30*
8	2 3/16	ZBR9203	5.500	4 19/32	1 21/32	3 1/4	7 5/8	3 11/32	1/2	5/8	1 11/16	3 3/8	23/32	1	15.20
	55.00	*ZBR9055MM*	*139.700*	*116.66*	*42.06*	*82.55*	*193.68*	*84.93*	*13.00*	*15.88*	*42.86*	*85.73*	*18.26*	*25.40*	*6.90*
9	2 7/16	ZBR9207	6.375	5 19/64	1 3/4	3 3/4	8 3/4	3 3/4	5/8	3/4	2	3 5/8	5/8	1 1/4	22.70
	2 1/2	ZBR9208													22.30
10	2 11/16	ZBR9211	7.375	6 3/32	2 1/4	4 5/16	10 1/4	4 1/4	3/4	15/16	2	4 13/32	13/16	1 1/4	36.40
	2 15/16	ZBR9215													35.40
	3	ZBR9300													34.70
	75.00	*ZBR9075MM*	*187.325*	*154.79*	*57.15*	*109.54*	*260.35*	*107.95*	*19.00*	*23.81*	*50.80*	*111.92*	*20.64*	*31.75*	*16.00*
11	3 3/16	ZBR9303	8.125	6 5/8	2 9/16	4 11/16	10 7/8	5	3/4	1 1/8	2 1/2	5 3/16	15/16	1 1/2	55.50
	3 7/16	ZBR9307													53.50
	80.00	*ZBR9080MM*	*206.375*	*168.28*	*65.09*	*119.06*	*276.23*	*127.00*	*19.00*	*28.58*	*63.50*	*131.76*	*23.81*	*38.10*	*25.00*
6-Bolt															
12	3 11/16	ZBR9311Y	10.250	5 7/8	2 11/32	5 7/8	13 1/2	5 17/32	3/4	1	3 1/16	5 23/32	1 1/32	2	84.20
	3 15/16	ZBR9315Y													81.90
	4	ZBR9400Y													81.40
	100.00	*ZBR9100MM*	*260.350*	*149.23*	*59.52*	*149.23*	*342.90*	*140.49*	*19.00*	*25.40*	*77.79*	*145.26*	*26.19*	*50.80*	*37.00*
13	4 3/16	ZBR9403	11.000	6 3/8	2 7/8	6 3/8	14 3/4	6 3/4	7/8	1 1/4	3 7/8	6 1/8	1 1/8	2 1/4	128.00
	4 7/16	ZBR9407													126.00
14	4 15/16	ZBR9415	13.000	7 1/4	3 5/16	7 1/4	17	7 1/16	7/8	1 3/8	3 7/8	7 3/32	1 1/8	2	178.00
	5	ZBR9500													177.00
15	5 7/16	ZBR9507	14.000	8 1/4	3 3/8	8 1/4	19	7 5/16	7/8	1	4 3/16	8 1/16	1 5/16	1 3/8	209.00
16	5 15/16	ZBR9515	15.000	8 1/2	3 1/2	8 1/2	19	7 3/4	1	1	4 1/4	9 1/16	1 11/16	1 1/2	241.00
	6	ZBR9600													240.00
	6 7/16	ZBR9607													233.00

Additional Notes

- Please call 1-866-REXNORD for availability
- Lubrication fitting tap size: for size code 7 thru 11, 1/8" PT: for all other size codes, 1/4" PT
- Pilot Diameter tolerance, +.000 in/-.002 in *(+0.00 mm/-0.05 mm)* for size codes 7 thru 13
- Pilot Diameter tolerance, +.005 in/-.000 in *(+0.13 mm/-0.00 mm)* for size codes 14 thru 16
- Bore tolerance for mounting, +.002 in/-.000 in *(+0.05 mm/-0.00 mm)* for size codes 7 thru 13
- Bore tolerance for mounting, +.005 in/-.000 in *(+0.13 mm/-0.00 mm)* for size codes 14 thru 16
- Seals - To specify G, K or M seal, replace "Z" in part number with "G", "K" or "M"
- "G" seals only available in size codes 7 thru 13
- "K" seals only available in size codes 7 thru 11
- Auxiliary end caps - available in all size codes
- For the Selection Guide, Load Ratings and Speed Limits, see the Spherical Roller Bearings Engineering section on pages 15 - 27.
- Note: Dimensions subject to change. Certified dimensions of ordered material furnished on request.

ZCS2000

Photo Shows a Spherical Roller Bearing Cartridge Unit with Steel Housing

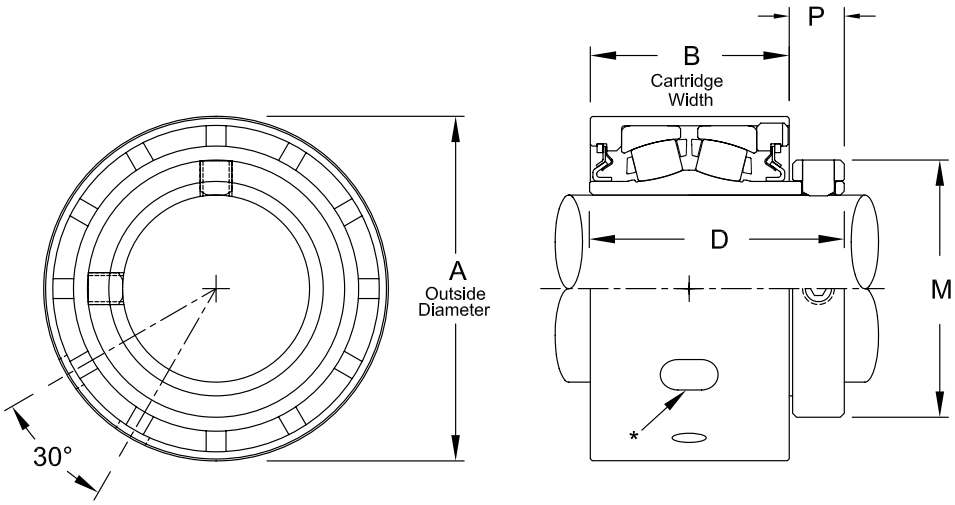

Product Features

- Steel housing
- Misalignment capabilities - total of 4°
- Broad range of sealing options
- Factory set clearance & lubrication
- Precision ground & superfinished raceways
- Hardened spring locking collar
- Field interchangeable seals
- See Features and Benefits for additional info on pages 10 - 13.

Bearing Dimensions

Size Code	Shaft Diameter	Part Number	A Outside Diameter	B Cartridge Length	D	M	P	Approx. Weight
4	1 7/16	ZCS2107	3.1240	2.188	2 7/8	2 5/16	11/16	2.90
	1 1/2	ZCS2108						2.80
	35.00	*ZCS2035MM*	*79.3500*	*55.570*	*73.02*	*58.74*	*17.46*	*1.80*
5	1 11/16	ZCS2111	3.6360	2.438	3.13	2 19/32	11/16	4.50
	1 3/4	ZCS2112						4.40
	40.00	*ZCS2040MM*	*92.3500*	*61.930*	*79.38*	*65.88*	*17.46*	*2.50*
	45.00	*ZCS2045MM*						
6	1 15/16	ZCS2115	3.8330	2.391	3 1/8	2 7/8	11/16	5.00
	2	ZCS2200						4.80
	50.00	*ZCS2050MM*	*97.3600*	*60.730*	*79.38*	*73.03*	*17.46*	*2.30*
7	2 3/16	ZCS2203	4.2270	2.500	3 5/16	3 1/4	13/16	6.40
	2 1/4	ZCS2204						6.30
	55.00	*ZCS2055MM*	*107.3600*	*63.500*	*84.14*	*82.60*	*19.84*	*3.20*
8	2 3/8	ZCS2206	4.6210	2.625	3 1/2	3 9/16	7/8	7.60
	2 7/16	ZCS2207						7.50
	2 1/2	ZCS2208						7.30
	60.00	*ZCS2060MM*	*117.3700*	*66.680*	*88.90*	*90.50*	*22.23*	*3.90*
	65.00	*ZCS2065MM*						
9	2 11/16	ZCS2211	5.4070	3.125	4.00	4 1/16	7/8	12.30
	2 3/4	ZCS2212						11.90
	2 15/16	ZCS2215						10.80
	3	ZCS2300						10.50
	70.00	*ZCS2070MM*	*137.3380*	*79.380*	*101.60*	*103.20*	*22.23*	*6.40*
	75.00	*ZCS2075MM*						*5.90*
10	3 3/16	ZCS2303	6.1940	3.438	4 3/8	4 29/32	15/16	17.90
	3 7/16	ZCS2307						16.40
	3 1/2	ZCS2308						15.90
	80.00	*ZCS2080MM*	*157.3300*	*87.330*	*111.13*	*124.62*	*23.81*	*9.00*
	85.00	*ZCS2085MM*						*8.60*
	90.00	*ZCS2090MM*						*8.20*
11	3 11/16	ZCS2311	7.3750	4.000	5 1/16	5 5/8	1 1/32	31.10
	3 15/16	ZCS2315						28.80
	4	ZCS2400						28.10
	100.00	*ZCS2100MM*	*187.3200*	*101.600*	*128.59*	*142.90*	*26.19*	*14.10*

Additional Notes

- Please call 1-866-REXNORD for availability
- O.D. tolerance, +.000 in/-.002 in *(+0.00 mm/-0.05 mm)*
- Bore tolerance for mounting, +.002 in/-.000 in *(+0.05 mm/-0.00 mm)*
- Expansion - is 3/8 in for all size codes
- *Expansion plug diameter .531 in *(13.49 mm)*, engagement depth .125 in +/-.015 in *(3.18 mm +/-0.38 mm)*
- Hole for fixed location & slot for expansion location in the same housing
- Seals - to specify G, K or M seal, replace "Z" in part number with "G", "K" or "M"
- Auxiliary end caps - not available
- For the Selection Guide, Load Ratings and Speed Limits, see the Spherical Roller Bearings Engineering section on pages 15 - 27.
- Note: Dimensions subject to change. Certified dimensions of ordered material furnished on request.

ZCS3000

Photo Shows a Spherical Roller Bearing Cartridge Unit with Steel Housing

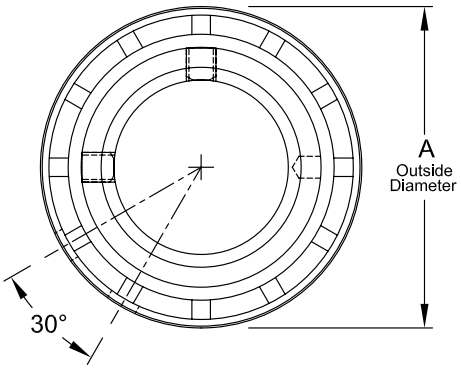

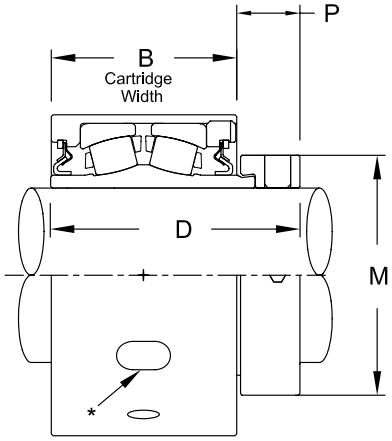

Product Features

- Steel housing
- Misalignment capabilities - total of 4°
- Broad range of sealing options
- Factory set clearance & lubrication
- Precision ground & superfinished raceways
- Eccentric locking collar
- Field interchangeable seals
- See Features and Benefits for additional info on pages 10 - 13.

Bearing Dimensions

Size Code	Shaft Diameter	Part Number	A Outside Diameter	B Cartridge Length	D	M	P	Approx. Weight
4	1 7/16	ZCS3107	3.1240	2.188	2 59/64	2 5/16	25/32	3.10
5	1 11/16	ZCS3111	3.6360	2.438	3 3/16	2 5/8	3/4	4.70
6	1 15/16	ZCS3115	3.8330	2.391	3 9/32	2 3/4	27/32	3.50
7	2 3/16	ZCS3203	4.2270	2.500	3 1/2	3 1/4	31/32	6.70
8	2 7/16	ZCS3207	4.6210	2.625	3 21/32	3 9/16	1 1/64	7.70
	2 1/2	ZCS3208						7.60
9	2 11/16	ZCS3211	5.4070	3.125	4 13/64	4 1/16	1 1/64	12.50
	2 15/16	ZCS3215						11.50
10	3 7/16	ZCS3307	6.1940	3.438	4 37/64	4 15/16	1 9/64	17.00
	3 1/2	ZCS3308						16.10
11	3 15/16	ZCS3315	7.3740	4.000	5 3/16	5 5/8	1 1/16	28.80

Additional Notes

- Please call 1-866-REXNORD for availability
- O.D. tolerance, +.000 in/-.002 in *(+0.00 mm/-0.05 mm)*
- Bore tolerance for mounting, +.002 in/-.000 in *(+0.05 mm/-0.00 mm)*
- Expansion - is 3/8 in for all size codes
- *Expansion plug diameter .531 in *(13.49 mm)*, engagement depth .125 in +/-.015 in *(3.18 mm +/-0.38 mm)*
- Hole for fixed location & slot for expansion location in the same housing
- Seals - to specify G, K or M seal, replace "Z" in part number with "G", "K" or "M"
- Auxiliary end caps - not available
- For the Selection Guide, Load Ratings and Speed Limits, see the Spherical Roller Bearings Engineering section on pages 15 - 27.
- Note: Dimensions subject to change. Certified dimensions of ordered material furnished on request.

ZCS5000

Photo Shows a Spherical Roller Bearing Cartridge Unit with Steel Housing

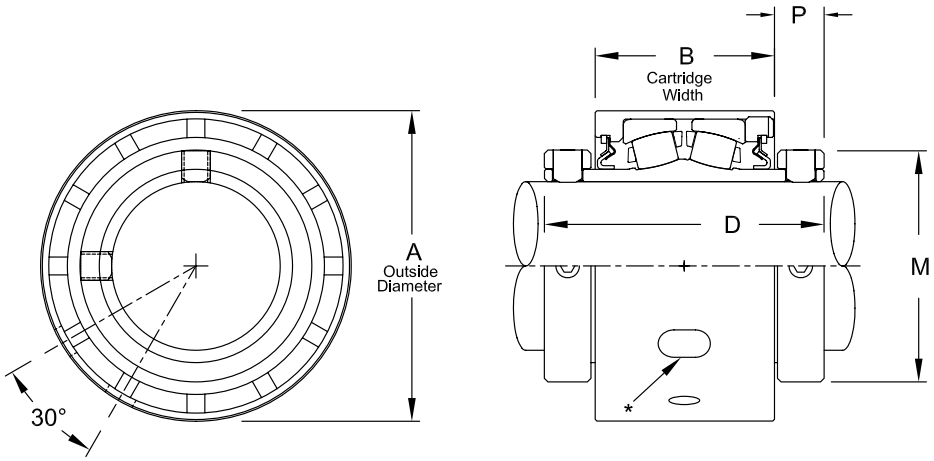

Product Features

- Steel housing
- Misalignment capabilities - total of 4°
- Broad range of sealing options
- Factory set clearance & lubrication
- Precision ground & superfinished raceways
- Two hardened spring locking collars
- Field interchangeable seals
- See Features and Benefits for additional info on pages 10 - 13.

Bearing Dimensions

Size Code	Shaft Diameter	Part Number	A Outside Diameter	B Cartridge Length	D	M	P	Approx. Weight
4	1 7/16	ZCS5107	3.1240	2.188	3 9/16	2 5/16	11/16	3.30
	35.00	*ZCS5035MM*	*79.3500*	*55.580*	*90.49*	*58.74*	*17.46*	*1.50*
5	1 1/2	ZCS5108	3.6360	2.438	3 13/16	2 19/32	11/16	5.70
	1 11/16	ZCS5111						5.10
	40.00	*ZCS5040MM*	*92.3500*	*61.930*	*96.84*	*65.88*	*17.46*	*2.59*
	45.00	*ZCS5045MM*						*2.55*
6	1 15/16	ZCS5115	3.8330	2.391	3 13/16	2 7/8	11/16	5.30
	50.00	*ZCS5050MM*	*97.3600*	*61.730*	*96.84*	*73.03*	*17.46*	*2.40*
7	2	ZCS5200	4.2270	2.500	4 1/8	3 1/4	13/16	8.10
	2 3/16	ZCS5203						7.50
	55.00	*ZCS5055MM*	*107.3600*	*63.500*	*104.78*	*82.60*	*20.64*	*3.40*
8	2 7/16	ZCS5207	4.6210	2.625	4 3/8	3 9/16	7/8	8.70
	60.00	*ZCS5060MM*	*117.3700*	*66.680*	*111.13*	*90.50*	*22.23*	*4.08*
	65.00	*ZCS5065MM*						*4.20*
9	2 1/2	ZCS5208	5.4070	3.125	4 7/8	4 1/16	7/8	15.10
	2 11/16	ZCS5211						14.10
	2 15/16	ZCS5215						12.10
	70.00	*ZCS5070MM*	*137.3380*	*79.380*	*123.83*	*103.20*	*22.23*	*6.40*
	75.00	*ZCS5075MM*						*6.00*
10	3 3/16	ZCS5303	6.1940	3.438	5 5/16	4 29/32	15/16	19.80
	3 7/16	ZCS5307						17.90
	80.00	*ZCS5080MM*	*157.3300*	*88.140*	*134.94*	*124.62*	*23.81*	*8.90*
	85.00	*ZCS5085MM*						*8.50*
	90.00	*ZCS5090MM*						*8.10*
11	3 11/16	ZCS5311	7.3750	4	6 1/8	5 5/8	1 1/32	33.60
	3 15/16	ZCS5315						32.60
	4	ZCS5400						31.60
	100.00	*ZCS5100MM*	*187.3200*	*101.600*	*155.58*	*142.90*	*26.19*	*14.80*
12	4 3/16	ZCS5403Y	7.9685	4 1/4	6 1/4	6 3/16	1 1/16	44.00
	4 7/16	ZCS5407Y						40.00
	4 1/2	ZCS5408Y						39.50
	110.00	*ZCS5110MM*	*202.4000*	*107.950*	*158.75*	*157.16*	*26.99*	*20.00*
	115.00	*ZCS5115MM*						*18.00*
13	4 15/16	ZCS5415	9.3442	5.560	7 7/8	7 1/16	1 5/32	54.00
	5	ZCS5500						53.50
	125.00	*ZCS5125MM*	*237.3400*	*141.220*	*200.03*	*179.39*	*29.37*	*24.50*
	130.00	*ZCS5130MM*						*24.25*

Additional Notes

- Please call 1-866-REXNORD for availability
- O.D. tolerance, Size Code 11 and smaller +.000 in/-.002 in *(+0.00 mm/-0.05 mm)*
- O.D. tolerance, Size Code 12 and larger +.000 in/-.003 in *(+0.00 mm/-0.08 mm)*
- Bore tolerance for mounting, +.002 in/-.000 in *(+0.05 mm/-0.00 mm)*
- Expansion - is 3/8 in for all size codes
- *Expansion plug diameter .531 in *(13.49 mm)*, engagement depth .125 in +/-.015 in *(3.18 mm +/-0.38 mm)*
- Hole for fixed location & slot for expansion location in the same housing
- Seals - to specify G, K or M seal, replace "Z" in part number with "G", "K" or "M"
- "K" seals available in size codes 4 thru 11
- Auxiliary end caps - not available
- For the Selection Guide, Load Ratings and Speed Limits, see the Spherical Roller Bearings Engineering section on pages 15 - 27.
- Note: Dimensions subject to change. Certified dimensions of ordered material furnished on request.

ZCS6000

Photo Shows a Spherical Roller Bearing Cartridge Unit with Steel Housing

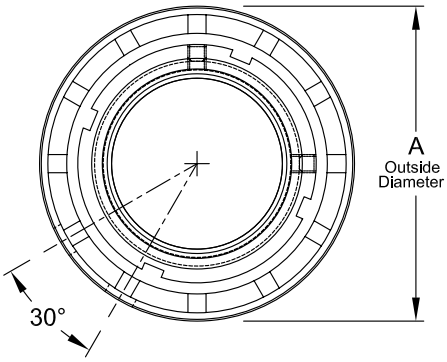

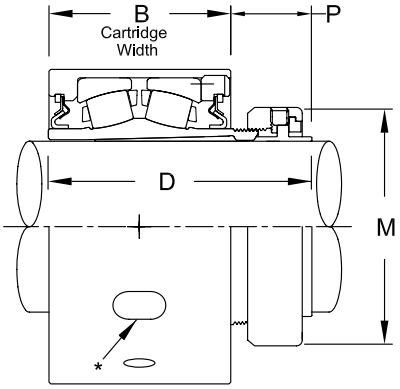

Product Features

- Spyglass Optical Strain Sensor (OSS) Technology
- Positive locking system
- Tapered adapter sleeve
- Steel housing
- Misalignment capabilities - total of 4°
- Broad range of sealing options
- Factory set clearance & lubrication
- Precision ground & superfinished raceways
- Field interchangeable seals
- See Features and Benefits for additional info on pages 10 - 13.

Bearing Dimensions

Size Code	Shaft Diameter	Part Number	A Outside Diameter	B Cartridge Length	D	M	P	Approx. Weight
4	1 7/16	ZCS6107	3.1240	2.188	3 21/64	2 25/64	1 9/64	2.90
5	1 11/16	ZCS6111	3.6360	2.438	3 47/64	2 41/64	1 9/32	4.50
6	1 15/16	ZCS6115	3.8330	2.391	3 41/64	2 55/64	1 1/8	5.30
	45.00	*ZCS6045MM*	*97.3600*	*60.730*	*92.47*	*72.63*	*28.58*	*2.55*
7	2 3/16	ZCS6203	4.2270	2.500	3 11/16	3 15/64	1 5/32	8.10
	55.00	*ZCS6055MM*	*107.3600*	*65.020*	*93.66*	*82.15*	*29.37*	*3.40*
8	2 3/8	ZCS6206	4.6210	2.625	4 1/16	3 19/32	1 27/64	9.10
	2 7/16	ZCS6207						8.70
	60.00	*ZCS6060MM*	*117.3700*	*66.680*	*103.19*	*91.28*	*36.12*	*4.08*
9	2 11/16	ZCS6211	5.4070	3.125	4 17/32	4 3/32	1 25/64	15.10
	2 3/4	ZCS6212						14.10
	2 15/16	ZCS6215						12.10
	70.00	*ZCS6070MM*	*137.3380*	*79.380*	*115.09*	*103.98*	*35.32*	*6.40*
	75.00	*ZCS6075MM*						*6.00*
10	3 3/16	ZCS6303	6.1940	3.438	5 1/32	4 61/64	1 19/32	19.80
	3 7/16	ZCS6307						17.90
	80.00	*ZCS6080MM*	*157.3300*	*88.140*	*127.79*	*125.81*	*40.48*	*8.90*
	85.00	*ZCS6085MM*						*8.50*
11	3 11/16	ZCS6311	7.3750	4	5 25/32	5 43/64	1 47/64	33.60
	3 15/16	ZCS6315						32.60
	90.00	*ZCS6090MM*	*187.3200*	*101.600*	*146.84*	*144.07*	*44.05*	*14.80*
	100.00	*ZCS6100MM*						
12	4 3/16	ZCS6403Y	7.9685	4 1/4	6 1/4	6 1/16	1 7/8	40.00
	4 7/16	ZCS6407Y						39.50
	110.00	*ZCS6110MM*	*202.4000*	*107.950*	*158.75*	*153.99*	*47.63*	*20.00*
13	4 15/16	ZCS6415	9.3442	5.560	7 15/16	6 61/64	2 1/4	54.00
	125.00	*ZCS6125MM*	*237.3400*	*141.220*	*201.61*	*176.61*	*57.15*	*24.50*

Additional Notes

- Please call 1-866-REXNORD for availability
- O.D. tolerance, Size Code 11 and smaller +.000 in/-.002 in *(+0.00 mm/-0.05 mm)*
- O.D. tolerance, Size Code 12 and larger +.000 in/-.003 in *(+0.00 mm/-0.08 mm)*
- Bore tolerance for mounting, +.002 in/-.000 in *(+0.05 mm/-0.00 mm)*
- Expansion - is 3/8 in for all size codes
- *Expansion plug diameter .531 in *(13.49 mm)*, engagement depth .125 in +/-.015 in *(3.18 mm +/-0.38 mm)*
- Hole for fixed location & slot for expansion location in the same housing
- Seals - to specify G, K or M seal, replace "Z" in part number with "G", "K" or "M"
- "K" seals available in size codes 4 thru 11
- Auxiliary end caps - not available
- For the Selection Guide, Load Ratings and Speed Limits, see the Spherical Roller Bearings Engineering section on pages 15 - 27.
- Note: Dimensions subject to change. Certified dimensions of ordered material furnished on request.

ZCS9000

Photo Shows a Spherical Roller Bearing Cartridge Unit with Steel Housing

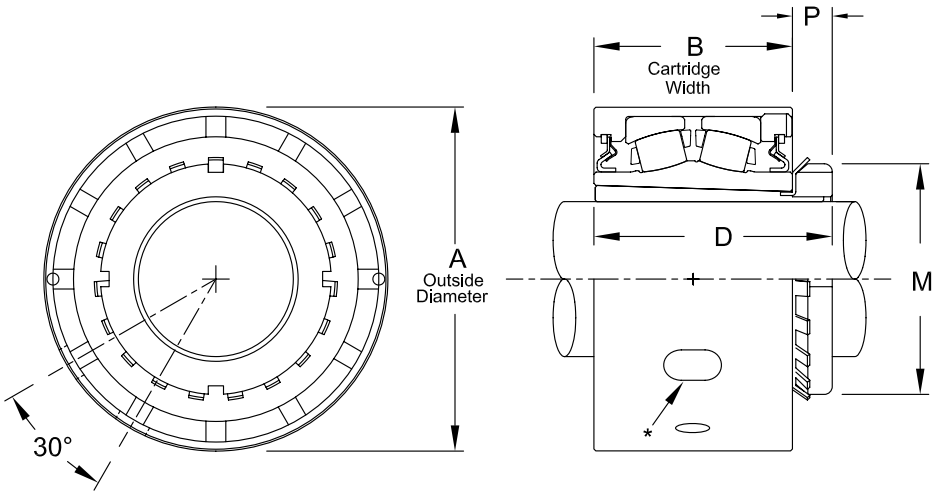

Product Features

- Steel housing
- Misalignment capabilities - total of 4°
- Broad range of sealing options
- Factory set clearance & lubrication
- Precision ground & superfinished raceways
- Enhanced life mounting style
- Field interchangeable seals
- See Features and Benefits for additional info on pages 10 - 13.

Bearing Dimensions

Size Code	Shaft Diameter	Part Number	A Outside Diameter	B Cartridge Length	D	M	P	Approx. Weight
7	1 15/16	ZCS9115	4.2270	2.500	3 5/32	2 31/32	19/32	6.60
	2	ZCS9200						6.50
	45.00	*ZCS9045MM*	*107.3600*	*65.020*	*80.17*	*75.40*	*15.08*	*2.90*
	50.00	*ZCS9050MM*						*3.10*
8	2 3/16	ZCS9203	4.6210	2.625	3 11/32	3 3/8	23/32	7.90
	55.00	*ZCS9055MM*	*117.3700*	*66.680*	*84.93*	*85.73*	*18.26*	*3.60*
9	2 7/16	ZCS9207	5.4070	3.125	3 3/4	3 5/8	5/8	11.60
	2 1/2	ZCS9208						11.20
10	2 11/16	ZCS9211	6.1940	3.438	4 1/4	4 13/32	13/16	19.10
	2 15/16	ZCS9215						17.90
	3	ZCS9300						17.20
	75.00	*ZCS9075MM*	*157.3300*	*88.140*	*107.95*	*111.92*	*20.64*	*7.80*
11	3 3/16	ZCS9303	7.3750	4	5	5 3/16	15/16	34.30
	3 7/16	ZCS9307						32.30
	80.00	*ZCS9080MM*	*187.3200*	*101.600*	*127.00*	*131.76*	*23.81*	*15.60*
12	3 11/16	ZCS9311Y	7.9685	4 1/4	5 17/32	5 23/32	1 1/32	44.00
	3 15/16	ZCS9315Y						40.00
	4	ZCS9400Y						39.50
	100.00	*ZCS9100MM*	*202.4000*	*107.950*	*140.49*	*145.26*	*26.19*	*20.00*
13	4 3/16	ZCS9403	9.3442	5.562	6 3/4	6 1/8	1 1/8	54.00
	4 7/16	ZCS9407						53.50

Additional Notes

- Please call 1-866-REXNORD for availability
- O.D. tolerance, Size Code 11 and smaller +.000 in/-.002 in *(+0.00 mm/-0.05 mm)*
- O.D. tolerance, Size Code 12 and larger +.000 in/-.003 in *(+0.00 mm/-0.08 mm)*
- Bore tolerance for mounting, +.002 in/-.000 in *(+0.05 mm/-0.00 mm)*
- Expansion - is 3/8 in for all size codes
- *Expansion plug diameter .531 in *(13.49 mm)*, engagement depth .125 in +/-.015 in *(3.18 mm +/-0.38 mm)*
- Hole for fixed location & slot for expansion location in the same housing
- Seals - to specify G, K or M seal, replace "Z" in part number with "G", "K" or "M"
- "K" seals available in size codes 4 thru 11
- Auxiliary end caps - not available
- For the Selection Guide, Load Ratings and Speed Limits, see the Spherical Roller Bearings Engineering section on pages 15 - 27.
- Note: Dimensions subject to change. Certified dimensions of ordered material furnished on request.

ZMC2000

Photo Shows a Spherical Roller Bearing Cartridge Unit with Cast Iron Housing

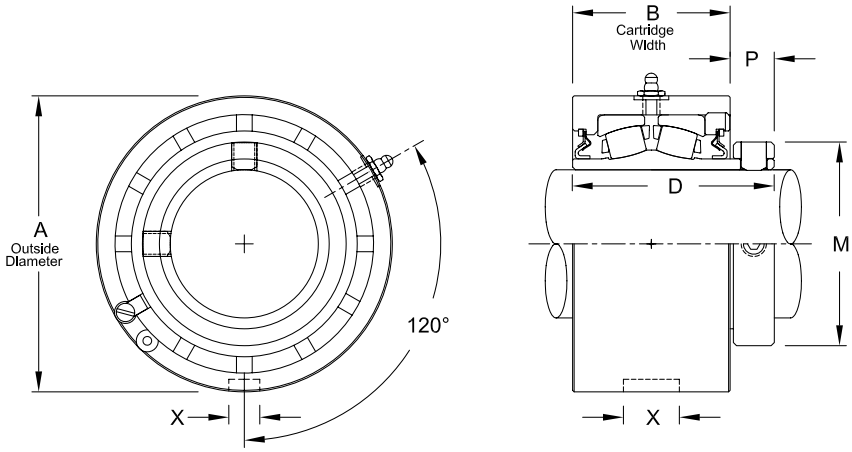

Product Features

- Corrosion-resistant powder coating
- Cast iron housing
- Misalignment capabilities - total of 4°
- Broad range of sealing options
- Factory set clearance & lubrication
- Precision ground & superfinished raceways
- Hardened spring locking collar
- Field interchangeable seals
- See Features and Benefits for additional info on pages 10 - 13.

Bearing Dimensions

Size Code	Shaft Diameter	Part Number	A Outside Diameter	B Cartridge Length	D	M	P	X Depth	X Length	X Width	Approx. Weight
2	3/4	ZMC2012	3.0000	2	2 9/16	1 3/4	9/16	-	-	-	3.10
	15/16	ZMC2015									2.90
	1	ZMC2100									
	25.00	*ZMC2025MM*	*76.2000*	*50.800*	*65.09*	*44.45*	*14.29*	*-*	*-*	*-*	*1.30*
3	1 1/8	ZMC2102	3.2190	2 1/8	2 11/16	1 31/32	9/16	-	-	-	3.50
	1 3/16	ZMC2103									3.40
	1 1/4	ZMC2104									3.30
	30.00	*ZMC2030MM*	*81.7600*	*53.980*	*68.26*	*50.00*	*14.29*	*-*	*-*	*-*	*1.60*
4	1 7/16	ZMC2107	3.4370	2 3/16	2 7/8	2 5/16	11/16	3/16	29/32	0.531	3.90
	1 1/2	ZMC2108									3.80
	35.00	*ZMC2035MM*	*87.3000*	*55.560*	*73.02*	*58.74*	*17.46*	*4.76*	*23.02*	*13.490*	*1.70*
5	1 11/16	ZMC2111	3.9370	2 7/16	3 1/8	2 19/32	11/16	3/16	29/32	0.531	5.60
	1 3/4	ZMC2112									5.40
	40.00	*ZMC2040MM*	*100.0000*	*61.910*	*79.38*	*65.88*	*17.46*	*4.76*	*23.02*	*13.490*	*2.50*
	45.00	*ZMC2045MM*									*2.30*
6	1 15/16	ZMC2115	4.1250	2 7/16	3 1/8	2 7/8	11/16	3/16	29/32	0.531	5.80
	2	ZMC2200									5.60
	50.00	*ZMC2050MM*	*104.7800*	*61.910*	*79.38*	*73.03*	*17.46*	*4.76*	*23.02*	*13.490*	*2.60*
7	2 3/16	ZMC2203	4.5310	2 9/16	3 5/16	3 1/4	13/16	3/16	29/32	0.531	7.50
	2 1/4	ZMC2204									7.30
	55.00	*ZMC2055MM*	*115.0880*	*65.090*	*84.14*	*82.60*	*19.84*	*4.76*	*23.02*	*13.460*	*3.40*
8	2 3/8	ZMC2206	5.0000	2 5/8	3 1/2	3 9/16	7/8	3/16	29/32	0.531	9.50
	2 7/16	ZMC2207									9.40
	2 1/2	ZMC2208									9.20
	60.00	*ZMC2060MM*	*127.0000*	*66.680*	*88.90*	*90.50*	*22.23*	*4.76*	*23.02*	*13.490*	*4.80*
	65.00	*ZMC2065MM*									*4.40*
9	2 11/16	ZMC2211	5.8750	3 1/8	4	4 1/16	7/8	1/4	1 1/32	0.594	15.90
	2 3/4	ZMC2212									15.50
	2 15/16	ZMC2215									14.40
	3	ZMC2300									14.10
	70.00	*ZMC2070MM*	*149.2250*	*79.380*	*101.60*	*103.20*	*22.23*	*6.35*	*26.19*	*15.090*	*8.00*
	75.00	*ZMC2075MM*									*7.80*
10	3 3/16	ZMC2303	6.7500	3 7/16	4 3/8	4 29/32	15/16	9/32	1 1/16	0.594	22.50
	3 7/16	ZMC2307									20.50

Continued...

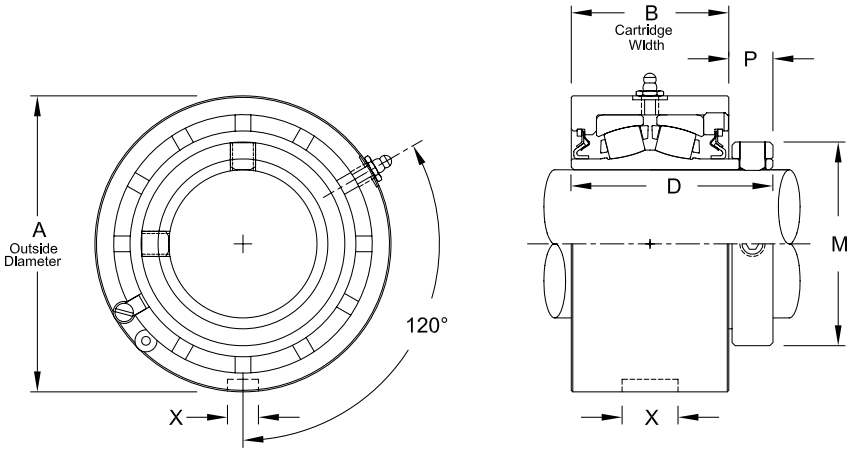

Continued...

Bearing Dimensions

Size Code	Shaft Diameter	Part Number	A Outside Diameter	B Cartridge Length	D	M	P	X Depth	X Length	X Width	Approx. Weight
10	3 1/2	ZMC2308	6.7500	3 7/16	4 3/8	4 29/32	15/16	9/32	1 1/16	0.594	20.00
	80.00	*ZMC2080MM*	*171.4500*	*87.310*	*111.13*	*124.62*	*23.81*	*6.35*	*26.19*	*15.090*	*11.20*
	85.00	*ZMC2085MM*									*11.00*
	90.00	*ZMC2090MM*									*10.80*
11	3 11/16	ZMC2311	8.1250	4 1/8	5 1/16	5 5/8	1 1/32	5/16	1 9/32	0.781	38.50
	3 15/16	ZMC2315									36.50
	4	ZMC2400									35.80
	100.00	*ZMC2100MM*	*206.3750*	*104.780*	*128.59*	*142.90*	*26.19*	*7.94*	*32.54*	*19.830*	*16.60*

Additional Notes

Please call 1-866-REXNORD for availability
Metric bore sizes available, see Rex Interchangeability guide
Lubrication fitting tap size, 1/8 PT
Bore size = nominal shaft size +.001 in/-.000 in *(+0.03 mm/-0.00 mm)*
O.D. tolerance, +.000 in/-.002 in *(+0.00 mm/-0.05 mm)*
Bore Tolerance for mounting, +.002 in/-.000 in *(+0.05 mm/-0.00 mm)*
Seals - to specify G, K or M seal, replace “Z” in part number with “G”, “K” or “M”

“G” seals available in size codes 3 thru 11
Auxiliary end caps - not available
For the Selection Guide, Load Ratings and Speed Limits, see the Spherical Roller Bearings Engineering section on pages 15 - 27.
Note: Dimensions subject to change. Certified dimensions of ordered material furnished on request.

ZMC3000

Photo Shows a Spherical Roller Bearing Cartridge Unit with Cast Iron Housing

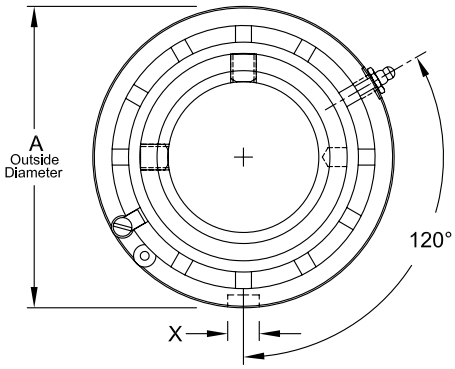

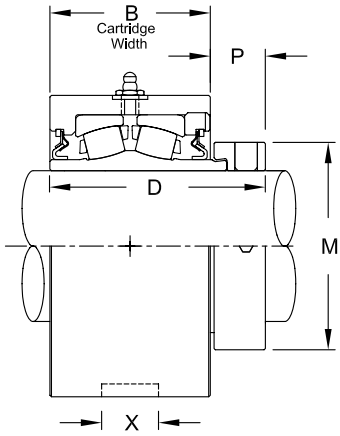

Product Features

- Corrosion-resistant powder coating
- Cast iron housing
- Misalignment capabilities - total of 4°
- Broad range of sealing options
- Factory set clearance & lubrication
- Precision ground & superfinished raceways
- Eccentric locking collar
- Field interchangeable seals
- See Features and Benefits for additional info on pages 10 - 13.

Bearing Dimensions

Size Code	Shaft Diameter	Part Number	A Outside Diameter	B Cartridge Length	D	M	P	X Depth	X Length	X Width	Approx. Weight
4	1 7/16	ZMC3107	3.4370	2 3/16	2 59/64	2 5/16	25/32	3/16	29/32	0.531	4.10
5	1 11/16	ZMC3111	3.9370	2 7/16	3 3/16	2 5/8	3/4	3/16	29/32	0.531	5.80
6	1 15/16	ZMC3115	4.1250	2 7/16	3 9/32	2 15/16	27/32	3/16	29/32	0.531	6.00
7	2 3/16	ZMC3203	4.5310	2 9/16	3 1/2	3 1/4	31/32	3/16	29/32	0.531	7.80
8	2 7/16	ZMC3207	5.0000	2 5/8	3 21/32	3 9/16	1 1/64	3/16	29/32	0.531	9.60
	2 1/2	ZMC3208									9.50
9	2 11/16	ZMC3211	5.8750	3 1/8	4 13/64	4 1/16	1 1/64	1/4	1 1/32	0.594	16.10
	2 15/16	ZMC3215									15.10
10	3 7/16	ZMC3307	6.7500	3 7/16	4 37/64	4 15/16	1 9/64	9/32	1 1/16	0.594	21.10
	3 1/2	ZMC3308									20.20
11	3 15/16	ZMC3315	8.1250	4 1/8	5 3/16	5 5/8	1 1/16	5/16	1 9/32	0.781	36.50

Additional Notes

- Please call 1-866-REXNORD for availability
- Lubrication fitting tap size, 1/8" PT
- Bore size = nominal shaft size +.001 in/-.000 in *(+0.03 mm/-0.00 mm)*
- O.D. tolerance, +.000 in/-.002 in *(+0.00 mm/-0.05 mm)*
- Bore Tolerance for mounting, +.002 in/-.000 in *(+0.05 mm/-0.00 mm)*
- Seals - to specify G, K or M seal, replace “Z” in part number with “G”, “K” or “M”
- Auxiliary end caps - not available
- For the Selection Guide, Load Ratings and Speed Limits, see the Spherical Roller Bearings Engineering section on pages 15 - 27.
- Note: Dimensions subject to change. Certified dimensions of ordered material furnished on request.

ZMC5000

Photo Shows a Spherical Roller Bearing Cartridge Unit with Cast Iron Housing

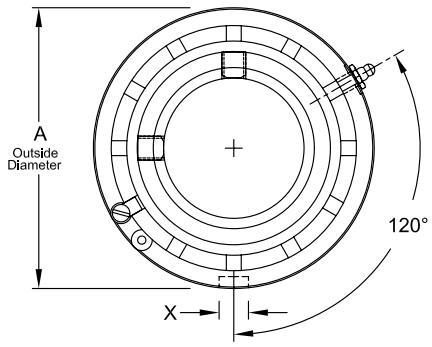

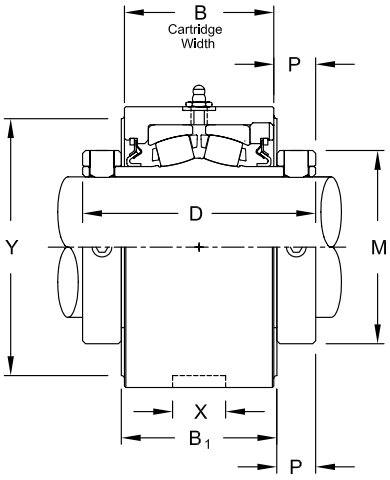

Product Features

- Corrosion-resistant powder coating
- Cast iron housing
- Misalignment capabilities - total of 4°
- Broad range of sealing options
- Factory set clearance & lubrication
- Precision ground & superfinished raceways
- Two hardened spring locking collars
- Field interchangeable seals
- See Features and Benefits for additional info on pages 10 - 13.

Bearing Dimensions

Size Code	Shaft Diameter	Part Number	A Outside Diameter	B Cartridge Length	B1	D	M	P	X Depth	X Length	X Width	Y	Approx. Weight
4	1 7/16	ZMC5107	3.4370	2 3/16	-	3 9/16	2 5/16	11/16	3/16	29/32	0.531	-	4.30
	35.00	*ZMC5035MM*	*3.4370*	*2 3/16*	*-*	*90.49*	*58.74*	*17.46*	*4.76*	*23.02*	*13.490*	*-*	*2.00*
5	1 1/2	ZMC5108	3.9370	2 7/16	-	3 13/16	2 19/32	11/16	3/16	29/32	0.531	-	6.50
	1 11/16	ZMC5111											5.90
	40.00	*ZMC5040MM*	*100.0000*	*61.910*	*-*	*96.84*	*65.88*	*17.46*	*4.76*	*23.02*	*13.490*	*-*	*2.90*
	45.00	*ZMC5045MM*											*2.70*
6	1 15/16	ZMC5115	4.1250	2 7/16	-	3 13/16	2 7/8	11/16	3/16	29/32	0.531	-	6.50
	50.00	*ZMC5050MM*	*104.7800*	*61.910*	*-*	*96.84*	*73.03*	*17.46*	*4.76*	*23.02*	*13.490*	*-*	*2.90*
7	2	ZMC5200	4.5310	2 9/16	-	4 1/8	3 1/4	13/16	3/16	29/32	0.531	-	9.50
	2 3/16	ZMC5203											8.80
	55.00	*ZMC5055MM*	*115.0880*	*65.090*	*-*	*104.78*	*82.60*	*20.64*	*4.76*	*23.02*	*13.490*	*-*	*4.00*
8	2 7/16	ZMC5207	5.0000	2 5/8	-	4 3/8	3 9/16	7/8	3/16	29/32	0.531	-	10.60
	60.00	*ZMC5060MM*	*127.0000*	*66.680*	*-*	*111.13*	*90.50*	*22.23*	*4.76*	*23.02*	*13.490*	*-*	*5.00*
	65.00	*ZMC5065MM*											*4.80*
9	2 1/2	ZMC5208	5.8750	3 1/8	-	4 7/8	4 1/16	7/8	1/4	1 1/32	0.594	-	18.70
	2 11/16	ZMC5211											17.70
	2 15/16	ZMC5215											15.70
	70.00	*ZMC5070MM*	*149.2250*	*79.380*	*-*	*123.83*	*103.20*	*22.23*	*6.35*	*26.19*	*15.090*	*-*	*8.00*
	75.00	*ZMC5075MM*											*7.60*
10	3 3/16	ZMC5303	6.7500	3 7/16	-	5 5/16	4 29/32	15/16	9/32	1 1/16	0.594	-	24.70
	3 7/16	ZMC5307											22.80
	80.00	*ZMC5080MM*	*171.4500*	*87.310*	*-*	*134.94*	*124.62*	*23.81*	*6.35*	*26.19*	*15.090*	*-*	*11.20*
	85.00	*ZMC5085MM*											*10.80*
	90.00	*ZMC5090MM*											*10.40*
11	3 11/16	ZMC5311	8.1250	4 1/8	-	6 1/8	5 5/8	1 1/32	5/16	1 9/32	0.781	-	44.00
	3 15/16	ZMC5315											41.50
	4	ZMC5400											41.00
	100.00	*ZMC5100MM*	*206.3750*	*104.780*	*-*	*155.58*	*142.90*	*26.19*	*7.94*	*32.54*	*19.840*	*-*	*20.00*
12	4 3/16	ZMC5403Y	8.7500	4 1/4	-	6 1/4	6 3/16	1 1/16	5/16	1 1/2	0.781	-	50.00
	4 7/16	ZMC5407Y											47.00
	4 1/2	ZMC5408Y											46.00
	110.00	*ZMC5110MM*	*222.2500*	*107.950*	*-*	*158.75*	*157.16*	*26.99*	*7.94*	*32.54*	*19.840*	*-*	*22.70*
	115.00	*ZMC5115MM*											*22.00*
13	4 15/16	ZMC5415	10.4370	5 9/16	6	7 7/8	7 1/16	1 5/32	5/16	1 1/2	0.781	7 25/32	95.00

Continued...

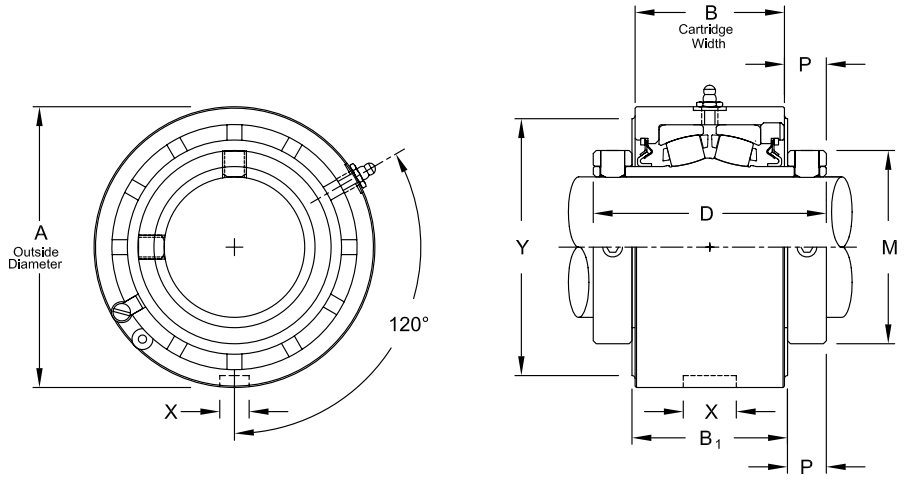

Continued...

Bearing Dimensions

Size Code	Shaft Diameter	Part Number	A Outside Diameter	B Cartridge Length	B1	D	M	P	X Depth	X Length	X Width	Y	Approx. Weight
13	5	ZMC5500	10.4370	5 9/16	6	7 7/8	7 1/16	1 5/32	5/16	1 1/2	0.781	7 25/32	92.00
	125.00	*ZMC5125MM*	*265.1000*	*141.290*	*152.40*	*200.03*	*179.39*	*29.37*	*7.94*	*32.54*	*19.840*	*197.64*	*43.00*
	130.00	*ZMC5130MM*											*42.00*
14	5 7/16	ZMC5507	11.5000	5 9/16	5 7/8	8	8 3/16	1 7/32	7/32	1 1/2	0.781	9 9/16	114.00
	140.00	*ZMC5140MM*	*292.1000*	*141.290*	*149.23*	*203.20*	*207.96*	*30.96*	*7.94*	*32.54*	*19.840*	*242.89*	*51.00*
15	5 15/16	ZMC5515	12.2500	5 7/8	6 1/8	8 1/8	8 5/8	1 5/32	7/32	1 1/2	0.781	10 3/8	134.00
	6	ZMC5600											133.00
	150.00	*ZMC5150MM*	*311.1500*	*149.230*	*155.58*	*206.38*	*219.08*	*29.37*	*7.94*	*32.54*	*19.840*	*263.53*	*61.00*
	160.00	*ZMC5160MM*											*59.00*
16	6 7/16	ZMC5607	13.5630	6 3/16	6 1/2	8 3/4	9 23/32	1 9/32	7/32	1 1/2	0.781	10 3/8	180.00
	6 15/16	ZMC5615											167.00
	7	ZMC5700											166.00
	180.00	*ZMC5180MM*	*344.5000*	*157.160*	*165.10*	*222.25*	*246.86*	*32.54*	*7.94*	*32.54*	*19.840*	*288.93*	*75.00*

Additional Notes

Please call 1-866-REXNORD for availability

Metric bore sizes available, see Rex Interchangeability guide

Lubrication fitting tap size: for size code 4 thru 11, 1/8" PT: for all other size codes, 1/4" PT

Bore size = nominal shaft size +.001 in/-.000 in *(+0.03 mm/-0.00 mm)*

O.D. tolerance, for size code 4 thru 11 +.000 in/-.002 in *(+0.00 mm/-0.05 mm)*: for all other size codes, +.000 in/-.003 in *(+0.00 mm/-0.08 mm)*

Bore Tolerance for mounting, +.002 in/-.000 in *(+0.05 mm/-0.00 mm)*

Seals - to specify G, K or M seal, replace “Z” in part number with “G”, “K” or “M”

“G” seals only available in size codes 4 thru 13

“K” seals only available in size codes 4 thru 11

Auxiliary end caps - not available

For the Selection Guide, Load Ratings and Speed Limits, see the Spherical Roller Bearings Engineering section on pages 15 - 27.

Note: Dimensions subject to change. Certified dimensions of ordered material furnished on request.

ZMC6000

Photo Shows a Spherical Roller Bearing Cartridge Unit with Cast Iron Housing

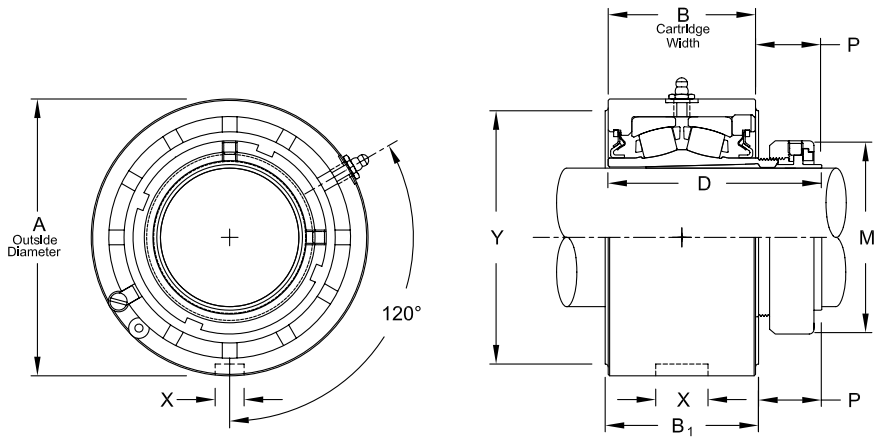

Product Features

- Spyglass Optical Strain Sensor (OSS) Technology
- Positive locking system
- Tapered adapter sleeve
- Corrosion-resistant powder coating
- Cast iron housing
- Misalignment capabilities - total of 4°
- Broad range of sealing options
- Factory set clearance & lubrication
- Precision ground & superfinished raceways
- See Features and Benefits for additional info on pages 10 - 13.

Bearing Dimensions

Size Code	Shaft Diameter	Part Number	A Outside Diameter	B Cartridge Length	B1	D	M	P	X Depth	X Length	X Width	Y	Approx. Weight
4	1 7/16	ZMC6107	3.437	2 3/16	-	3 21/64	2 25/64	1 9/64	3/16	29/32	0.531	-	3.90
5	1 11/16	ZMC6111	3.937	2 7/16	-	3 47/64	2 41/64	1 9/32				-	5.60
6	1 15/16	ZMC6115	4.1250	2 7/16	-	3 41/64	2 55/64	1 1/8				-	6.50
	45.00	*ZMC6045MM*	*104.7800*	*61.910*	*-*	*92.47*	*72.63*	*28.58*	*4.76*	*23.02*	*13.490*	*-*	*2.70*
7	2 3/16	ZMC6203	4.5310	2 9/16	-	3 11/16	3 15/64	1 5/32	3/16	29/32	0.531	-	9.50
	55.00	*ZMC6055MM*	*115.0880*	*65.090*	*-*	*93.66*	*82.15*	*29.37*	*4.76*	*23.02*	*13.490*	*-*	*4.00*
8	2 3/8	ZMC6206	5.0000	2 5/8	-	4 1/16	3 19/32	1 27/64	3/16	29/32	0.531	-	10.90
	2 7/16	ZMC6207											10.60
	60.00	*ZMC6060MM*	*127.0000*	*66.680*	*-*	*103.19*	*91.28*	*36.12*	*4.76*	*23.02*	*13.490*	*-*	*5.00*
9	2 11/16	ZMC6211	5.8750	3 1/8	-	4 17/32	4 3/32	1 25/64	1/4	1 1/32	0.594	-	18.70
	2 3/4	ZMC6212											17.70
	2 15/16	ZMC6215											15.70
	70.00	*ZMC6070MM*	*149.2250*	*79.380*	*-*	*115.09*	*103.98*	*35.32*	*6.35*	*26.19*	*15.090*	*-*	*8.00*
	75.00	*ZMC6075MM*											*7.60*
10	3 3/16	ZMC6303	6.7500	3 7/16	-	5 1/32	4 61/64	1 19/32	9/32	1 1/16	0.594	-	24.70
	3 7/16	ZMC6307											22.80
	80.00	*ZMC6080MM*	*171.4500*	*87.310*	*-*	*127.79*	*125.81*	*40.48*	*6.35*	*26.19*	*15.090*	*-*	*11.20*
	85.00	*ZMC6085MM*											*10.80*
11	3 11/16	ZMC6311	8.1250	4 1/8	-	5 25/32	5 43/64	1 47/64	5/16	1 9/32	0.781	-	44.00
	3 15/16	ZMC6315											41.50
	90.00	*ZMC6090MM*	*206.3750*	*104.780*	*-*	*146.84*	*144.07*	*44.05*	*7.94*	*32.54*	*19.840*	*-*	*20.00*
	100.00	*ZMC6100MM*											
12	4 3/16	ZMC6403Y	8.7500	4 1/4	-	6 1/4	6 1/16	1 7/8	5/16	1 1/2	0.781	-	50.00
	4 7/16	ZMC6407Y											47.00
	110.00	*ZMC6110MM*	*222.2500*	*107.950*	*-*	*158.75*	*153.99*	*47.63*	*7.94*	*32.54*	*19.840*	*-*	*22.70*
13	4 15/16	ZMC6415	10.4370	5 9/16	6	7 15/16	6 61/64	2 1/4	5/16	1 1/2	0.781	7 25/32	95.00
	125.00	*ZMC6125MM*	*265.1000*	*141.290*	*152.40*	*201.61*	*176.61*	*57.15*	*7.94*	*32.54*	*19.840*	*197.640*	*43.00*
14	5 7/16	ZMC6507	11.5000	5 9/16	5 7/8	8 49/64	8 1/64	3 3/64	7/32	1 1/2	0.781	9 9/16	114.00
15	5 15/16	ZMC6515	12.2500	5 7/8	6 1/8	9 19/64	8 21/32	3 7/16	7/32	1 1/2	0.781	10 3/8	134.00
16	6 7/16	ZMC6607	13.5630	6 3/16	6 1/2	10	9 3/4	3 43/64	7/32	1 1/2	0.781	11 3/8	180.00
	6 15/16	ZMC6615											167.00

Additional Notes

Please call 1-866-REXNORD for availability

Lubrication fitting tap size: for size code 6 thru 11, 1/8" PT: for all other size codes, 1/4" PT

Bore size = nominal shaft size +.001 in/-.000 in *(+0.03 mm/-0.00 mm)*

O.D. tolerance, for size code 6 thru 11 +.000 in/-.002 in *(+0.00 mm/-0.05 mm)*: for all other size codes, +.000 in/-.003 in *(+0.00 mm/-0.08 mm)*

Bore Tolerance for mounting, +.002 in/-.000 in *(+0.05 mm/-0.00 mm)*

Seals - to specify K or M seal, replace "Z" in part number with "K" or "M"

"G" seals only available in size codes 4 thru 13

"K" seals only available in size codes 4 thru 11

Auxiliary end caps - not available

For the Selection Guide, Load Ratings and Speed Limits, see the Spherical Roller Bearings Engineering section on pages 15 - 27.

Note: Dimensions subject to change. Certified dimensions of ordered material furnished on request.

ZMC9000

Photo Shows a Spherical Roller Bearing Cartridge Unit with Cast Iron Housing

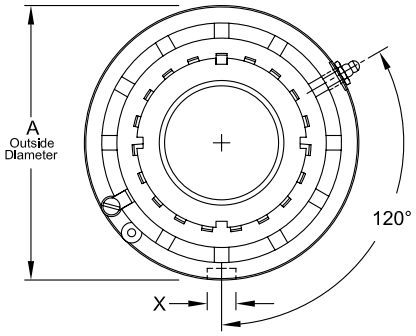

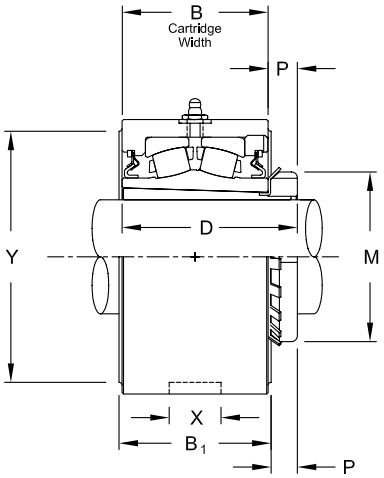

Product Features

- Corrosion-resistant powder coating
- Cast iron housing
- Misalignment capabilities - total of 4°
- Broad range of sealing options
- Factory set clearance & lubrication
- Precision ground & superfinished raceways
- Enhanced life mounting style
- Field interchangeable seals
- See Features and Benefits for additional info on pages 10 - 13.

Bearing Dimensions

Size Code	Shaft Diameter	Part Number	A Outside Diameter	B Cartridge Length	B1	D	M	P	X Depth	X Length	X Width	Y	Approx. Weight
7	1 15/16	ZMC9115	4.5310	2 9/16	-	3 5/32	2 31/32	19/32	3/16	29/32	0.531	-	7.60
	2	ZMC9200											7.40
	45.00	*ZMC9045MM*	*115.0880*	*65.090*	*-*	*80.17*	*75.40*	*15.08*	*4.76*	*23.02*	*13.490*	*-*	*3.50*
	50.00	*ZMC9050MM*											*3.40*
8	2 3/16	ZMC9203	5.0000	2 5/8	-	3 11/32	3 3/8	23/32	3/16	29/32	0.531	-	9.60
	55.00	*ZMC9055MM*	*127.0000*	*66.680*	*-*	*84.93*	*85.73*	*18.26*	*4.76*	*23.02*	*13.490*	*-*	*4.30*
9	2 7/16	ZMC9207	5.8750	3 1/8	-	3 3/4	3 5/8	5/8	1/4	1 1/32	0.594	-	15.60
	2 1/2	ZMC9208											15.20
10	2 11/16	ZMC9211	6.7500	3 7/16	-	4 1/4	4 13/32	13/16	9/32	1 1/16	0.594	-	23.80
	2 15/16	ZMC9215											22.50
	3	ZMC9300											22.10
	75.00	*ZMC9075MM*	*171.4500*	*87.310*	*-*	*107.95*	*111.92*	*20.64*	*6.35*	*26.19*	*15.090*	*-*	*10.00*
11	3 3/16	ZMC9303	8.1250	4 1/8	-	5	5 3/16	15/16	5/16	1 9/32	0.781	-	41.00
	3 7/16	ZMC9307											39.40
	80.00	*ZMC9080MM*	*206.3750*	*104.780*	*-*	*127.00*	*131.76*	*23.81*	*7.94*	*32.54*	*19.840*	*-*	*18.60*
12	3 11/16	ZMC9311Y	8.7500	4 1/4	-	5 17/32	5 23/32	1 1/32	5/16	1 1/2	0.781	-	48.50
	3 15/16	ZMC9315Y											46.20
	4	ZMC9400Y											45.70
	100.00	*ZMC9100MM*	*222.2500*	*107.950*	*-*	*140.49*	*145.26*	*26.19*	*7.94*	*32.54*	*19.840*	*-*	*21.00*
13	4 3/16	ZMC9403	10.4370	5 9/16	6	6 3/4	6 1/8	1 1/8	5/16	1 1/2	0.781	7 25/32	92.00
	4 7/16	ZMC9407											90.00
14	4 15/16	ZMC9415	11.5000	5 9/16	5 7/8	7 1/16	7 3/32	1 1/8	7/32	1 1/2	0.781	9 9/16	115.00
	5	ZMC9500											108.00
15	5 7/16	ZMC9507	12.2500	5 7/8	6 1/8	7 5/16	8 1/16	1 5/16	7/32	1 1/2	0.781	10 3/8	130.00
16	5 15/16	ZMC9515	13.5630	6 3/16	6 1/2	7 3/4	9 1/16	1 11/16	7/32	1 1/2	0.781	11 3/8	175.00
	6	ZMC9600											177.00
	6 7/16	ZMC9607											170.00

Additional Notes

- Please call 1-866-REXNORD for availability
- Lubrication fitting tap size: for size code 7 thru 11, 1/8" PT: for all other size codes, 1/4" PT
- Bore size = nominal shaft size +.001 in/-.000 in *(+0.03 mm/-0.00 mm)*
- O.D. tolerance, for size code 7 thru 11 +.000 in/-.002 in *(+0.00 mm/-0.05 mm)*: for all other size codes, +.000 in/-.003 in *(+0.00 mm/-0.08 mm)*
- Bore Tolerance for mounting, +.002 in/-.000 in *(+0.05 mm/-0.00 mm)*
- Seals - to specify G, K or M seal, replace "Z" in part number with "G", "K" or "M"
- "G" seals only available in size codes 7 thru 13
- "K" seals only available in size codes 7 thru 11
- Auxiliary end caps - not available
- For the Selection Guide, Load Ratings and Speed Limits, see the Spherical Roller Bearings Engineering section on pages 15 - 27.
- Note: Dimensions subject to change. Certified dimensions of ordered material furnished on request.

ZT2000

Interchange: *WSTUS2, WSTUE, TBR, USTU5000, QATU, ETUTRB*

Photo Shows a Spherical Roller Bearing Take-up Unit

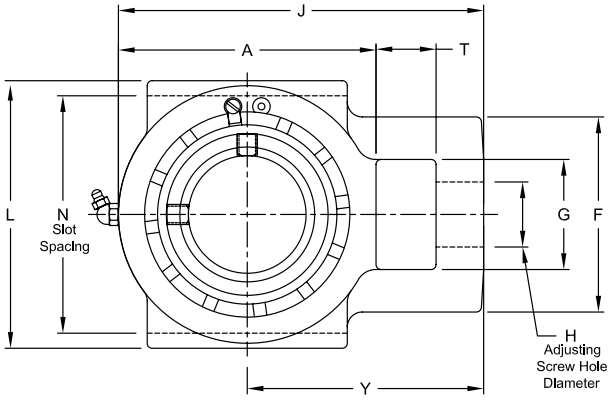

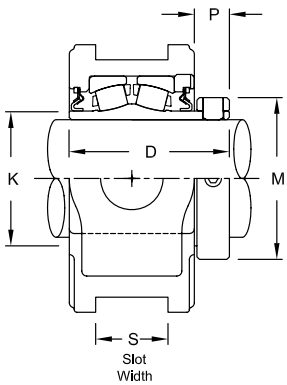

Product Features

- Corrosion-resistant powder coating
- Cast iron housing
- Misalignment capabilities - total of 4°
- Broad range of sealing options
- Factory set clearance & lubrication
- Precision ground & superfinished raceways
- Hardened spring locking collar
- Field interchangeable seals
- See Features and Benefits for additional info on pages 10 - 13.

Bearing Dimensions

Size Code	Shaft Diameter	Part Number	H Adjusting Screw Hole Diameter	N Slot Spacing	S Slot Width	A	D	F	G	J	K	L	M	P	T	Y	Allowable Working Load	Approx. Weight
2	3/4	ZT22012	3/4	3	17/32	3	2 9/16	2	1 1/4	4 1/16	1 5/16	3 5/8	1 3/4	9/16	5/8	2 9/16	4,400	4.00
	15/16	ZT22015																
	1	ZT22100																3.90
	25.00	*ZT22025MM*	*19.05*	*76.200*	*13.490*	*76.20*	*65.09*	*50.80*	*31.75*	*103.19*	*33.340*	*92.08*	*44.45*	*14.29*	*15.88*	*65.09*	*1,995*	*1.80*
3	1 1/8	ZT32102	7/8	3 1/2	17/32	3 3/8	2 11/16	2 5/16	1 7/16	4 9/16	1 17/32	4 1/8	1 31/32	9/16	5/8	2 7/8	5,700	5.50
	1 3/16	ZT32103																5.40
	1 1/4	ZT32104																5.30
	30.00	*ZT32030MM*	*22.23*	*88.900*	*13.490*	*85.73*	*68.26*	*58.74*	*36.51*	*141.29*	*38.890*	*104.78*	*50.00*	*14.29*	*15.88*	*73.03*	*2,585*	*2.40*
4	1 7/16	ZT42107	7/8	3 1/2	17/32	3 3/4	2 7/8	2 7/16	1 7/16	5 1/16	1 3/4	4 1/8	2 5/16	11/16	5/8	3 1/4	7,600	6.40
	1 1/2	ZT42108																6.30
	35.00	*ZT42035MM*	*22.23*	*88.900*	*13.490*	*95.25*	*73.02*	*61.91*	*36.51*	*128.59*	*44.450*	*104.78*	*58.74*	*17.46*	*15.88*	*82.55*	*3,447*	*2.90*
5	1 11/16	ZT52111	1 1/8	4	11/16	4 1/4	3 1/8	3 5/16	1 3/4	5 15/16	2 1/32	4 3/4	1 19/32	11/16	15/16	3 13/16	12,300	9.80
	1 3/4	ZT52112																9.70
	40.00	*ZT52040MM*	*28.58*	*101.600*	*17.460*	*107.95*	*79.38*	*84.14*	*44.45*	*150.81*	*51.590*	*120.65*	*65.88*	*17.46*	*23.81*	*96.84*	*5,580*	*4.50*
	45.00	*ZT52045MM*																*4.40*
6	1 15/16	ZT62115	1 1/8	4	11/16	4 1/2	3 1/8	3 5/16	1 15/16	6 3/16	2 5/16	4 1/2	2 7/8	11/16	3/4	3 15/16	12,300	10.10
	2	ZT62200																9.90
	50.00	*ZT62050MM*	*28.58*	*101.600*	*17.460*	*114.30*	*79.38*	*84.14*	*49.21*	*157.16*	*58.740*	*114.30*	*73.03*	*17.46*	*19.05*	*100.01*	*5,580*	*4.60*
7	2 3/16	ZT72203	1 3/8	4 1/2	13/16	5	3 5/16	3 7/8	2 1/4	7 1/8	2 5/8	5 1/4	3 1/4	13/16	1 1/4	4 5/8	13,500	13.60
	2 1/4	ZT72204																13.40
	55.00	*ZT72055MM*	*34.93*	*114.300*	*20.640*	*127.00*	*84.14*	*98.43*	*57.15*	*180.98*	*66.680*	*133.35*	*82.60*	*19.84*	*31.75*	*117.48*	*6,120*	*6.20*
8	2 3/8	ZT82206	1 3/8	5 1/8	1 1/16	5 1/2	3 1/2	4 1/4	2 1/4	7 13/16	2 29/32	5 7/8	3 9/16	7/8	1 1/4	5 1/16	20,900	18.30
	2 7/16	ZT82207																18.20
	2 1/2	ZT82208																17.90
	60.00	*ZT82060MM*	*34.93*	*130.180*	*26.990*	*139.70*	*88.90*	*107.95*	*57.15*	*198.44*	*73.810*	*149.23*	*90.50*	*22.23*	*31.75*	*128.59*	*9,480*	*8.30*
	65.00	*ZT82065MM*																*8.10*
9	2 11/16	ZT92211	1 5/8	5 15/16	1 13/16	6 7/16	4	4 7/8	2 3/4	9 1/8	3 3/8	6 11/16	4 1/16	7/8	1 1/2	5 15/16	26,800	28.80
	2 3/4	ZT92212																28.40
	2 15/16	ZT92215																27.60
	3	ZT92300																27.00
	70.00	*ZT92070MM*	*41.28*	*150.810*	*46.040*	*163.51*	*101.60*	*123.83*	*69.85*	*231.78*	*85.730*	*169.86*	*103.20*	*20.64*	*38.10*	*150.81*	*12,150*	*12.90*
	75.00	*ZT92075MM*																*12.50*
10	3 3/16	ZT102303	1 7/8	6 13/16	1 13/16	7 3/8	4 3/8	5 3/8	2 7/8	10	3 31/32	7 13/16	4 29/32	15/16	1 5/8	6 5/16	27,300	42.50
	3 7/16	ZT102307																40.50

Continued...

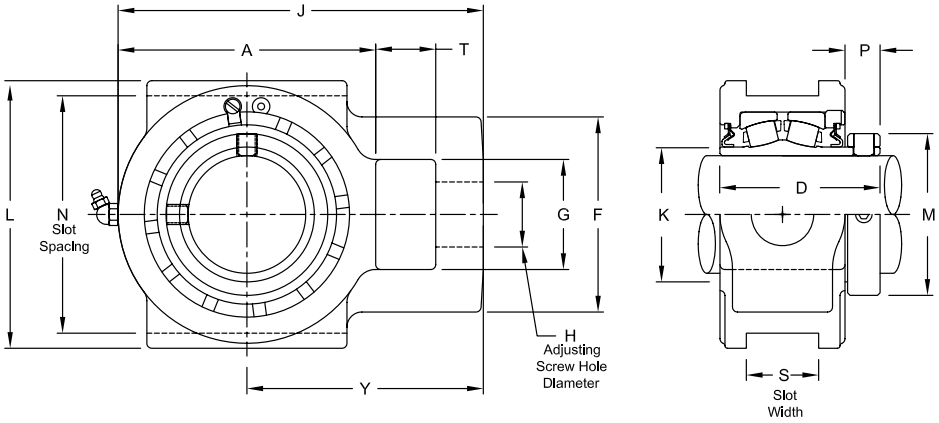

Continued...

Bearing Dimensions

Size Code	Shaft Diameter	Part Number	H Adjusting Screw Hole Diameter	N Slot Spacing	S Slot Width	A	D	F	G	J	K	L	M	P	T	Y	Allowable Working Load	Approx. Weight
10	3 1/2	ZT102308	1 7/8	6 13/16	1 13/16	7 3/8	4 3/8	5 3/8	2 7/8	10	3 31/32	7 13/16	4 29/32	15/16	1 5/8	6 5/16	27,300	40.00
	80.00	*ZT102080MM*	*47.63*	*173.040*	*46.040*	*187.33*	*111.13*	*136.53*	*73.03*	*254.00*	*100.810*	*198.44*	*124.62*	*23.81*	*41.28*	*160.34*	*12,380*	*19.30*
	85.00	*ZT102085MM*																*18.40*
	90.00	*ZT102090MM*																*18.10*
11	3 11/16	ZT112311	2 1/8	8 5/8	2 1/16	8 7/8	5 1/16	5 3/8	3 3/8	12 1/8	4 9/16	9 7/16	5 5/8	1 1/32	2 1/8	7 11/16	45,400	71.00
	3 15/16	ZT112315																68.00
	4	ZT112400																67.00
	100.00	*ZT112100MM*	*53.98*	*219.080*	*52.390*	*225.43*	*128.59*	*136.53*	*85.73*	*307.98*	*115.890*	*239.71*	*142.90*	*26.19*	*53.98*	*195.26*	*20,600*	*30.90*

Additional Notes

Please call 1-866-REXNORD for availability
Metric bore sizes available, see Rex Interchangeability guide
Lubrication fitting tap size, 1/8" PT
Bore size = nominal shaft size +.001 in/-.000 in *(+0.03 mm/-0.00 mm)*
Take-up slot spacing & width tolerance, +.005 in/-.015 in *(+0.13 mm/-0.38 mm)*
Seals - to specify G, K or M seal, replace "Z" in part number with "G", "K" or "M"
Auxiliary end caps - available in all size codes except for size codes 2 & 3

"G" seals only available in size codes 3 thru 11
Allowable working load is 2/3 yield strength
For the Selection Guide, Load Ratings and Speed Limits, see the Spherical Roller Bearings Engineering section on pages 15 - 27.
Note: Dimensions subject to change. Certified dimensions of ordered material furnished on request.

ZT3000

Interchange: *QMTU*

Photo Shows a Spherical Roller Bearing Take-up Unit

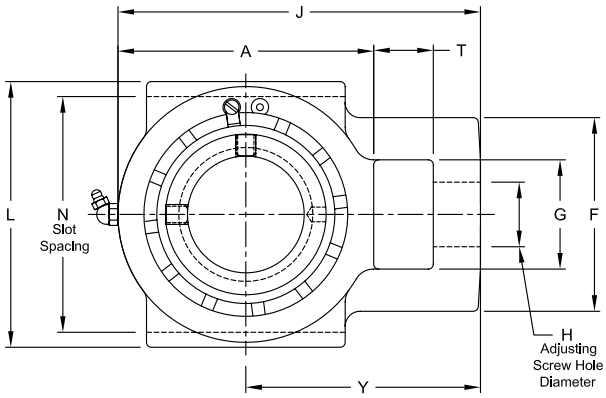

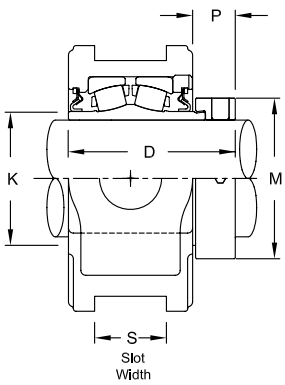

Product Features

- Corrosion-resistant powder coating
- Cast iron housing
- Misalignment capabilities - total of 4°
- Broad range of sealing options
- Factory set clearance & lubrication
- Precision ground & superfinished raceways
- Hardened eccentric locking collar
- Field interchangeable seals
- See Features and Benefits for additional info on pages 10 - 13.

Bearing Dimensions

Size Code	Shaft Diameter	Part Number	H Adjusting Screw Hole Diameter	N Slot Spacing	S Slot Width	A	D	F	G	J	K	L	M	P	T	Y	Allowable Working Load (2/3 Yield Strength)	Approx. Weight
4	1 7/16	ZT43107	7/8	3 1/2	17/32	3 3/4	2 59/64	2 7/16	1 7/16	5 1/16	1 3/4	4 1/8	2 5/16	25/32	5/8	3 1/4	7,600	6.60
5	1 11/16	ZT53111	1 1/8	4	11/16	4 1/4	3 3/16	3 5/16	1 15/16	5 15/16	2 1/32	4 3/4	2 5/8	3/4	3/4	3 13/16	12,300	10.00
6	1 15/16	ZT63115	1 1/8	4	11/16	4 1/2	3 9/32	3 5/16	1 15/16	6 3/16	2 5/16	4 1/2	2 3/4	27/32	3/4	3 15/16	12,300	13.50
7	2 3/16	ZT73203	1 3/8	4 1/2	13/16	5	3 1/2	3 7/8	2 1/4	7 1/8	2 5/8	5 1/4	3 1/4	31/32	1 1/4	4 5/8	13,500	13.90
8	2 7/16	ZT83207	1 3/8	5 1/8	1 1/16	5 1/2	3 21/32	4 1/4	2 1/4	7 13/16	2 29/32	5 7/8	3 9/16	1 1/64	1 1/4	5 1/16	20,900	18.40
	2 1/2	ZT83208																18.30
9	2 11/16	ZT93211	1 5/8	5 15/16	1 13/16	6 7/16	4 13/64	4 7/8	2 3/4	9 1/8	3 3/8	6 11/16	4 1/16	1 1/64	1 1/2	5 15/16	26,800	29.00
	2 15/16	ZT93215																28.00
10	3 7/16	ZT103307	1 7/8	6 13/16	1 13/16	7 3/8	4 37/64	5 3/8	2 7/8	10	3 31/32	7 13/16	4 15/16	1 9/64	1 5/8	6 5/16	27,300	41.10
	3 1/2	ZT103308																40.90
11	3 15/16	ZT113315	2 1/8	8 5/8	2 1/16	8 7/8	5 3/16	5 3/8	3 3/8	12 3/8	4 9/16	9 7/16	5 5/8	1 1/16	2 1/8	7 11/16	45,400	68.00

Additional Notes

- Please call 1-866-REXNORD for availability
- Lubrication fitting tap size, 1/8" PT
- Bore size = nominal shaft size +.001 in/-.000 in *(+0.03 mm/-0.00 mm)*
- Take-up slot spacing & width tolerance, +.005 in/-.015 in *(+0.13 mm/-0.38 mm)*
- Seals - to specify G, K or M seal, replace "Z" in part number with "G", "K" or "M"
- Auxiliary end caps - available in all size codes
- Allowable working load is 2/3 yield strength

For the Selection Guide, Load Ratings and Speed Limits, see the Spherical Roller Bearings Engineering section on pages 15 - 27.

Note: Dimensions subject to change. Certified dimensions of ordered material furnished on request.

ZT5000

Interchange: *QAATU*

Photo Shows a Spherical Roller Bearing Take-up Unit

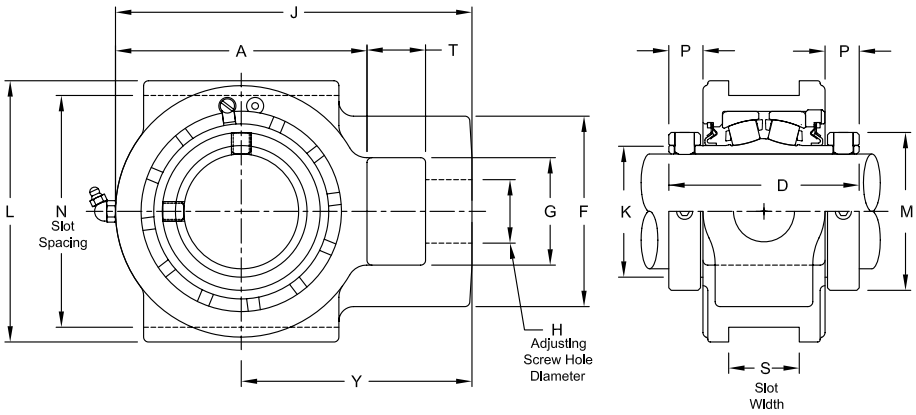

Product Features

- Corrosion-resistant powder coating
- Cast iron housing
- Misalignment capabilities - total of 4°
- Broad range of sealing options
- Factory set clearance & lubrication
- Precision ground & superfinished raceways
- Two hardened spring locking collars
- Field interchangeable seals
- See Features and Benefits for additional info on pages 10 - 13.

Bearing Dimensions

Size Code	Shaft Diameter	Part Number	H Adjusting Screw Hole Diameter	N Slot Spacing	S Slot Width	A	D	F	G	J	K	L	M	P	T	Y	Allowable Working Load	Approx. Weight
4	1 7/16	ZT45107	7/8	3 1/2	17/32	3 3/4	3 9/16	2 7/16	1 7/16	5 1/16	1 3/4	4 1/8	2 5/16	11/16	5/8	3 1/4	7,600	6.80
	35.00	*ZT45035MM*	*22.23*	*88.900*	*13.490*	*95.25*	*90.49*	*61.91*	*36.51*	*128.59*	*44.450*	*104.78*	*58.74*	*17.46*	*15.88*	*82.55*	*3,447*	*3.10*
5	1 1/2	ZT55108	1 1/8	4	11/16	4 1/4	3 13/16	3 5/16	1 3/4	5 15/16	2 1/32	4 3/4	2 19/32	11/16	15/16	3 13/16	12,300	10.90
	1 11/16	ZT55111																10.20
	40.00	*ZT55040MM*	*28.58*	*101.600*	*17.460*	*107.95*	*96.84*	*84.14*	*44.45*	*150.81*	*51.590*	*120.65*	*65.88*	*17.46*	*23.81*	*96.84*	*5,580*	*4.90*
	45.00	*ZT55045MM*																*4.60*
6	1 15/16	ZT65115	1 1/8	4	11/16	4 1/2	3 13/16	3 5/16	1 15/16	6 3/16	2 5/16	4 1/2	2 7/8	11/16	3/4	3 15/16	12,300	10.80
	50.00	*ZT65050MM*	*28.58*	*101.600*	*17.460*	*114.30*	*96.84*	*84.14*	*49.21*	*157.16*	*58.740*	*114.30*	*73.03*	*17.46*	*19.05*	*100.01*	*5,580*	*4.90*
7	2	ZT75200	1 3/8	4 1/2	13/16	5	4 1/8	3 7/8	2 1/4	7 1/8	2 5/8	5 1/4	3 1/4	13/16	1 1/4	4 5/8	13,500	15.20
	2 3/16	ZT75203																14.50
	55.00	*ZT75055MM*	*34.93*	*114.300*	*20.640*	*127.00*	*104.78*	*98.43*	*57.15*	*180.98*	*66.680*	*133.35*	*82.60*	*20.64*	*31.75*	*117.48*	*6,120*	*6.60*
8	2 7/16	ZT85207	1 3/8	5 1/8	1 1/16	5 1/2	4 3/8	4 1/4	2 1/4	7 13/16	2 29/32	5 7/8	3 9/16	7/8	1 1/4	5 1/16	20,900	19.40
	60.00	*ZT85060MM*	*34.93*	*130.180*	*26.990*	*139.70*	*111.13*	*107.95*	*57.15*	*198.44*	*73.810*	*149.23*	*90.50*	*22.23*	*31.75*	*128.59*	*9,480*	*8.80*
	65.00	*ZT85065MM*																*8.50*
9	2 1/2	ZT95208	1 5/8	5 15/16	1 13/16	6 7/16	4 7/8	4 7/8	2 3/4	9 1/8	3 3/8	6 11/16	4 1/16	7/8	1 1/2	5 15/16	26,800	31.50
	2 11/16	ZT95211																30.10
	2 15/16	ZT95215																28.80
	70.00	*ZT95070MM*	*41.28*	*150.810*	*46.040*	*163.51*	*123.83*	*123.83*	*69.85*	*231.78*	*85.730*	*169.86*	*103.20*	*22.23*	*38.10*	*150.81*	*12,150*	*13.60*
	75.00	*ZT95075MM*																*13.00*
10	3 3/16	ZT105303	1 7/8	6 13/16	1 13/16	7 3/8	5 5/16	5 3/8	2 7/8	10	3 31/32	7 13/16	4 29/32	15/16	1 5/8	6 5/16	27,300	44.00
	3 7/16	ZT105307																42.00
	80.00	*ZT105080MM*	*47.63*	*173.040*	*46.040*	*187.33*	*134.94*	*136.53*	*73.03*	*254.00*	*100.810*	*198.44*	*124.62*	*23.81*	*41.28*	*160.34*	*12,380*	*20.00*
	85.00	*ZT105085MM*																*19.00*
	90.00	*ZT105090MM*																*18.00*
11	3 11/16	ZT115311	2 1/8	8 5/8	2 1/16	8 7/8	6 1/8	5 3/8	3 3/8	12 1/8	4 9/16	9 7/16	5 5/8	1 1/32	2 1/8	7 11/16	45,400	75.00
	3 15/16	ZT115315																72.00
	4	ZT115400																71.00
	100.00	*ZT115100MM*	*53.98*	*219.080*	*52.390*	*225.43*	*155.58*	*136.53*	*85.73*	*307.98*	*115.890*	*239.71*	*142.90*	*26.19*	*53.98*	*195.26*	*20,600*	*33.00*
12	4 3/16	ZT125403Y	2 1/8	9 1/2	2 1/16	9 13/16	6 1/4	6 3/8	3 3/8	13 7/16	5 1/32	10 3/8	6 3/16	1 1/16	2 1/8	8 11/16	53,700	94.00
	4 7/16	ZT125407Y																91.00
	4 1/2	ZT125408Y																90.00
	110.00	*ZT125110MM*	*53.98*	*241.300*	*52.390*	*249.24*	*158.75*	*161.93*	*85.73*	*341.31*	*127.790*	*263.53*	*157.16*	*26.99*	*53.98*	*220.66*	*24,350*	*41.00*
	115.00	*ZT125115MM*																*40.00*
13	4 15/16	ZT135415	2 3/8	10 1/4	2 1/16	10 7/8	7 7/8	6 1/4	3 3/4	14 7/8	5 3/4	11 1/4	7 1/16	1 5/32	2 1/2	9 7/16	68,000	130.00

Continued...

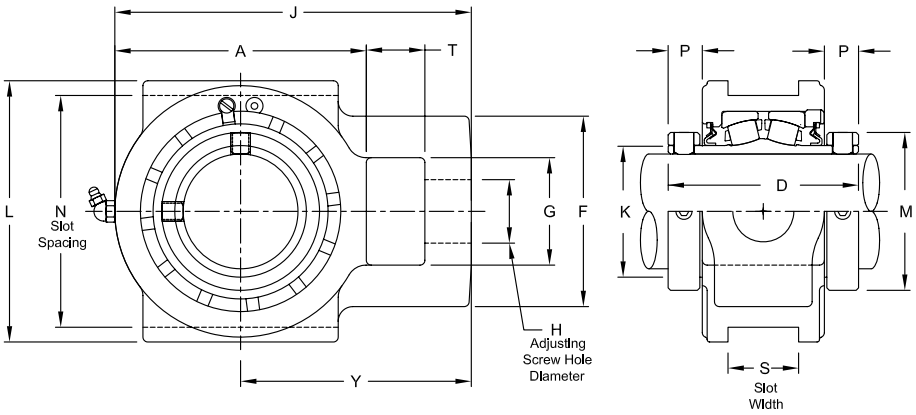

Continued...

Bearing Dimensions

Size Code	Shaft Diameter	Part Number	H Adjusting Screw Hole Diameter	N Slot Spacing	S Slot Width	A	D	F	G	J	K	L	M	P	T	Y	Allowable Working Load	Approx. Weight
13	5	ZT135500	2 3/8	10 1/4	2 1/16	10 7/8	7 7/8	6 1/4	3 3/4	14 7/8	5 3/4	11 1/4	7 1/16	1 5/32	2 1/2	9 7/16	68,000	127.00
	125.00	*ZT135125MM*	*60.33*	*260.350*	*52.390*	*276.23*	*200.03*	*158.75*	*95.25*	*377.83*	*146.050*	*285.75*	*179.39*	*29.37*	*63.50*	*239.71*	*30,800*	*59.00*
	130.00	*ZT135130MM*																*57.00*
14	5 7/16	ZT145507	3 1/8	14 1/8	2 9/16	15 3/8	8	8	5	20 5/8	6 1/2	16	8 3/16	1 7/32	3 1/2	12 7/16	140,900	417.00
	140.00	*ZT145140MM*	*79.38*	*358.780*	*65.090*	*390.53*	*203.20*	*203.20*	*127.00*	*523.88*	*165.100*	*406.40*	*207.96*	*30.96*	*88.90*	*315.91*	*63,900*	*189.00*
15	5 15/16	ZT155515	3 1/8	14 1/8	2 9/16	15 3/8	8 1/8	8	5	20 5/8	7 13/64	16	8 5/8	1 5/32	3 1/2	12 15/16	140,900	426.00
	6	ZT155600																424.00
	150.00	*ZT155150MM*	*79.38*	*358.780*	*65.090*	*390.53*	*206.38*	*203.20*	*127.00*	*523.88*	*182.960*	*406.40*	*219.08*	*29.37*	*88.90*	*328.61*	*63,900*	*193.00*
	160.00	*ZT155160MM*																*192.00*
16	6 7/16	ZT165607	3 1/8	14 1/8	2 9/16	15 3/8	8 3/4	8	5	20 5/8	8 3/64	16	9 23/32	1 9/32	3 1/2	12 15/16	165,300	433.00
	6 15/16	ZT165615																428.00
	7	ZT165700																426.00
	180.00	*ZT165180MM*	*79.38*	*358.780*	*65.090*	*390.53*	*222.25*	*203.20*	*127.00*	*523.88*	*204.390*	*406.40*	*246.86*	*32.54*	*88.90*	*328.61*	*74,900*	*193.00*

Additional Notes

Please call 1-866-REXNORD for availability

Metric bore sizes available, see Rex Interchangeability guide

Lubrication fitting tap size: for size code 4 thru 11, 1/8" PT: for all other size codes, 1/4" PT

Bore size = nominal shaft size +.001 in/-.000 in *(+0.03 mm/-0.00 mm)*

Take-up slot spacing & width tolerance, +.005 in/-.015 in *(+0.13 mm/-0.38 mm)*

Seals - to specify G, K or M seal, replace "Z" in part number with "G", "K" or "M"

"K" seals only available in size codes 4 thru 11

"G" seals only available in size codes 4 thru 13

Auxiliary end caps - available in all size codes

Allowable working load is 2/3 yield strength

For the Selection Guide, Load Ratings and Speed Limits, see the Spherical Roller Bearings Engineering section on pages 15 - 27.

Note: Dimensions subject to change. Certified dimensions of ordered material furnished on request.

ZT6000

Interchange: *WSTUIP, TBR-N, USTU5000A, QVVTU*

Photo Shows a Spherical Roller Bearing Take-up Unit

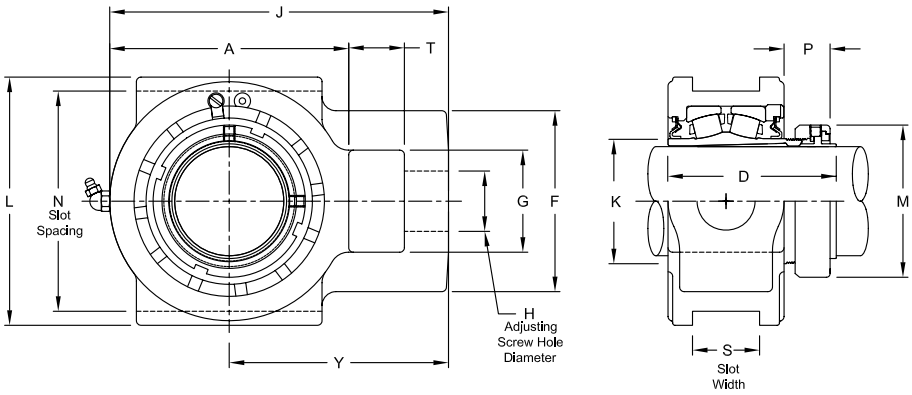

Product Features

- Spyglass Optical Strain Sensor (OSS) Technology
- Positive locking system
- Tapered adapter sleeve
- Corrosion-resistant powder coating
- Cast iron housing
- Misalignment capabilities - total of 4°
- Broad range of sealing options
- Factory set clearance & lubrication
- Precision ground & superfinished raceways
- See Features and Benefits for additional info on pages 10 - 13.

Bearing Dimensions

Size Code	Shaft Diameter	Part Number	H Adjusting Screw Hole Diameter	N Slot Spacing	S Slot Width	A	D	F	G	J	K	L	M	P	T	Y	Allowable Working Load	Approx. Weight
4	1 7/16	ZT46107	7/8	3 1/2	17/32	3 3/4	3 21/64	2 7/16	1 7/16	5 1/16	1 3/4	4 1/8	2 25/64	1 9/64	5/8	3 1/4	7,600	6.40
5	1 11/16	ZT56111	1 1/8	4	11/16	4 1/4	3 47/64	3 5/16	1 3/4	5 1/16	2 1/32	4 3/4	2 41/64	1 9/32	15/16	3 13/16	12,300	9.80
6	1 15/16	ZT66115	1 1/8	4	11/16	4 1/2	3 41/64	3 5/16	1 15/16	6 3/16	2 5/16	4 1/2	2 55/64	1 1/8	3/4	3 15/16	12,300	10.80
	45.00	*ZT66045MM*	*28.58*	*101.600*	*17.460*	*114.30*	*92.47*	*84.14*	*49.21*	*157.16*	*58.740*	*114.30*	*72.63*	*28.58*	*19.05*	*100.01*	*5,580*	*4.60*
7	2 3/16	ZT76203	1 3/8	4 1/2	13/16	5	3 11/16	3 7/8	2 1/4	7 1/8	2 5/8	5 1/4	3 15/64	1 5/32	1 1/4	4 5/8	13,500	15.20
	55.00	*ZT76055MM*	*34.93*	*114.300*	*20.640*	*127.00*	*93.66*	*98.43*	*57.15*	*180.98*	*66.680*	*133.35*	*82.15*	*29.37*	*31.75*	*117.48*	*6,120*	*6.60*
8	2 3/8	ZT86206	1 3/8	5 1/8	1 1/16	5 1/2	4 1/16	4 1/4	2 1/4	7 13/16	2 29/32	5 7/8	3 19/32	1 27/64	1 1/4	5 1/16	20,900	19.90
	2 7/16	ZT86207																19.40
	60.00	*ZT86060MM*	*34.93*	*130.180*	*26.990*	*139.70*	*103.19*	*107.95*	*57.15*	*198.44*	*73.810*	*149.23*	*91.28*	*36.12*	*31.75*	*128.59*	*9,480*	*8.80*
9	2 11/16	ZT96211	1 5/8	5 15/16	1 13/16	6 7/16	4 17/32	4 7/8	2 3/4	9 1/8	3 3/8	6 11/16	4 3/32	1 25/64	1 1/2	5 15/16	26,800	31.50
	2 3/4	ZT96212																30.10
	2 15/16	ZT96215																28.80
	70.00	*ZT96070MM*	*41.28*	*150.810*	*46.040*	*163.51*	*115.09*	*123.83*	*69.85*	*231.78*	*85.730*	*169.86*	*103.98*	*35.32*	*38.10*	*150.81*	*12,150*	*13.60*
	75.00	*ZT96075MM*																*13.00*
10	3 3/16	ZT106303	1 7/8	6 13/16	1 13/16	7 3/8	5 1/32	5 3/8	2 7/8	10	3 31/32	7 13/16	4 61/64	1 19/32	1 5/8	6 5/16	27,300	44.00
	3 7/16	ZT106307																42.00
	80.00	*ZT106080MM*	*47.63*	*173.040*	*46.040*	*187.33*	*127.79*	*136.53*	*73.03*	*254.00*	*100.810*	*198.44*	*125.81*	*40.48*	*41.28*	*160.34*	*12,380*	*20.00*
	85.00	*ZT106085MM*																
11	3 11/16	ZT116311	2 1/8	8 5/8	2 1/16	8 7/8	5 25/32	5 3/8	3 3/8	12 1/8	4 9/16	9 7/16	5 43/64	1 47/64	2 1/8	7 11/16	45,400	75.00
	3 15/16	ZT116315																72.00
	90.00	*ZT116090MM*	*53.98*	*219.080*	*52.390*	*225.43*	*146.84*	*136.53*	*85.73*	*307.98*	*115.890*	*239.71*	*144.07*	*44.05*	*53.98*	*195.26*	*20,600*	*33.00*
	100.00	*ZT116100MM*																
12	4 3/16	ZT126403Y	2 1/8	9 1/2	2 1/16	9 13/16	6 1/4	6 3/8	3 3/8	13 7/16	5 1/32	10 3/8	6 1/16	1 7/8	2 1/8	8 11/16	53,700	94.00
	4 7/16	ZT126407Y																91.00
	110.00	*ZT126110MM*	*53.98*	*241.300*	*52.390*	*249.24*	*158.75*	*161.93*	*85.73*	*341.31*	*127.790*	*263.53*	*153.99*	*47.63*	*53.98*	*220.66*	*24,350*	*41.00*
13	4 15/16	ZT136415	2 3/8	10 1/4	2 1/16	10 7/8	7 15/16	6 1/4	3 3/4	14 7/8	5 3/4	11 1/4	6 61/64	2 1/4	2 1/2	9 7/16	68,000	130.00
	125.00	*ZT136125MM*	*60.33*	*260.350*	*52.390*	*276.23*	*201.61*	*158.75*	*95.25*	*377.83*	*146.050*	*285.75*	*176.61*	*57.15*	*63.50*	*239.71*	*30,800*	*59.00*
14	5 7/16	ZT146507	3 1/8	14 1/8	2 9/16	15 3/8	8 49/64	8	5	20 5/8	6 1/2	16	8 1/64	3 3/64	3 1/2	12 7/16	140,900	417.00
15	5 15/16	ZT156515	3 1/8	14 1/8	2 9/16	15 3/8	9 19/64	8	5	20 5/8	7 13/64	16	8 21/32	3 7/16	3 1/2	12 15/16	140,900	426.00
16	6 7/16	ZT166607	3 1/8	14 1/8	2 9/16	15 3/8	10	8	5	20 5/8	8 3/64	16	9 3/4	3 43/64	3 1/2	12 15/16	165,300	433.00
	6 15/16	ZT166615																428.00

Additional Notes

- Please call 1-866-REXNORD for availability
- Lubrication fitting tap size: for size code 4 thru 11, 1/8" PT: for all other size codes, 1/4" PT
- Take-up slot spacing & width tolerance, +.005 in/-.015 in *(+0.13 mm/-0.38 mm)*
- Seals - to specify G, K or M seal, replace "Z" in part number with "G", "K" or "M"
- "G" seal only available in size codes 4 thru 13
- "K" seals only available in size codes 4 thru 11
- Auxiliary end caps - available in all size codes
- Allowable working load is 2/3 yield strength
- For the Selection Guide, Load Ratings and Speed Limits, see the Spherical Roller Bearings Engineering section on pages 15 - 27.
- Note: Dimensions subject to change. Certified dimensions of ordered material furnished on request.

ZT9000

Photo Shows a Spherical Roller Bearing Take-up Unit

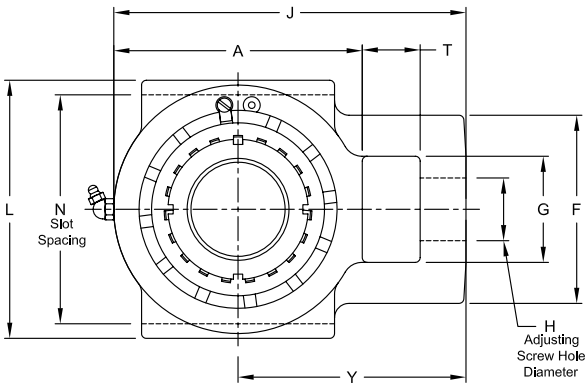

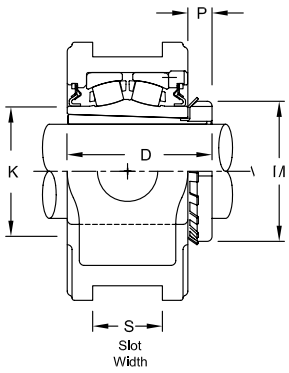

Product Features

- Corrosion-resistant powder coating
- Cast iron housing
- Misalignment capabilities - total of 4°
- Broad range of sealing options
- Factory set clearance & lubrication
- Precision ground & superfinished raceways
- Enhanced life mounting style
- Field interchangeable seals
- See Features and Benefits for additional info on pages 10 - 13.

Bearing Dimensions

Size Code	Shaft Diameter	Part Number	H Adjusting Screw Hole Diameter	N Slot Spacing	S Slot Width	A	D	F	G	J	K	L	M	P	T	Y	Allowable Working Load	Approx. Weight
7	1 15/16	ZT79115	1 3/8	4 1/2	13/16	5	3 5/32	3 7/8	2 1/4	7 1/8	2 5/8	5 1/4	2 31/32	19/32	1 1/4	4 5/8	13,500	13.70
	2	ZT79200																13.60
	45.00	*ZT79045MM*	*34.93*	*114.300*	*20.640*	*127.00*	*80.17*	*98.43*	*57.15*	*180.98*	*66.680*	*133.35*	*75.40*	*15.08*	*31.75*	*117.48*	*6,120*	*6.30*
	50.00	*ZT79050MM*																*6.10*
8	2 3/16	ZT89203	1 3/8	5 1/8	1 1/16	5 1/2	3 11/32	4 1/4	2 1/4	7 13/16	2 29/32	5 7/8	3 3/8	23/32	1 1/4	5 1/16	20,900	18.70
	55.00	*ZT89055MM*	*34.93*	*130.180*	*26.990*	*139.70*	*84.93*	*107.95*	*57.15*	*198.44*	*73.810*	*149.23*	*85.73*	*18.26*	*31.75*	*128.59*	*9,480*	*8.50*
9	2 7/16	ZT99207	1 5/8	5 15/16	1 13/16	6 7/16	3 3/4	4 7/8	2 3/4	9 1/8	3 3/8	6 11/16	3 5/8	5/8	1 1/2	5 15/16	26,800	29.10
	2 1/2	ZT99208																28.70
10	2 11/16	ZT109211	1 7/8	6 13/16	1 13/16	7 3/8	4 1/4	5 3/8	2 7/8	10	3 31/32	7 13/16	4 13/32	13/16	1 5/8	6 5/16	27,300	42.60
	2 15/16	ZT109215																41.40
	3	ZT109300																40.70
	75.00	*ZT109075MM*	*47.63*	*173.040*	*46.040*	*187.33*	*107.95*	*136.53*	*73.03*	*254.00*	*100.810*	*198.44*	*111.92*	*20.64*	*41.28*	*160.34*	*12,380*	*18.80*
11	3 3/16	ZT119303	2 1/8	8 5/8	2 1/16	8 7/8	5	5 3/8	3 3/8	12 1/8	4 9/16	9 7/16	5 3/16	15/16	2 1/8	7 11/16	45,400	75.50
	3 7/16	ZT119307																73.50
	80.00	*ZT119080MM*	*53.98*	*219.080*	*52.390*	*225.43*	*127.00*	*136.53*	*85.73*	*307.98*	*115.890*	*239.71*	*131.76*	*23.81*	*53.98*	*195.26*	*20,600*	*34.00*
12	3 11/16	ZT129311Y	2 1/8	9 1/2	2 1/16	9 13/16	5 17/32	6 3/8	3 3/8	13 7/16	5 1/32	10 3/8	5 23/32	1 1/32	2 1/8	8 11/16	53,700	91.20
	3 15/16	ZT129315Y																88.90
	4	ZT129400Y																88.40
	100.00	*ZT129100MM*	*53.98*	*241.300*	*52.390*	*249.24*	*140.49*	*161.93*	*85.73*	*341.31*	*127.790*	*263.53*	*145.26*	*26.19*	*53.98*	*220.66*	*24,350*	*41.30*
13	4 3/16	ZT139403	2 3/8	10 1/4	2 1/16	10 7/8	6 3/4	6 1/4	3 3/4	14 7/8	5 3/4	11 1/4	6 1/8	1 1/8	2 1/2	9 7/16	68,000	130.00
	4 7/16	ZT139407																128.00
14	4 15/16	ZT149415	3 1/8	14 1/8	2 9/16	15 3/8	7 1/16	8	5	20 5/8	6 1/2	16	7 3/32	1 1/8	3 1/2	12 7/16	140,900	411.00
	5	ZT149500																410.00
15	5 7/16	ZT159507	3 1/8	14 1/8	2 9/16	15 3/8	7 5/16	8	5	20 5/8	7 13/64	16	8 1/16	1 5/16	3 1/2	12 15/16	140,900	421.00
16	5 15/16	ZT169515	3 1/8	14 1/8	2 9/16	15 3/8	7 3/4	8	5	20 5/8	8 3/64	16	9 1/16	1 11/16	3 1/2	12 15/16	165,300	428.00
	6	ZT169600																427.00
	6 7/16	ZT169607																420.00

Additional Notes

Please call 1-866-REXNORD for availability

Lubrication fitting tap size: for size code 7 thru 11, 1/8" PT: for all other size codes, 1/4" PT

Take-up slot spacing & width tolerance, +.005 in/-.015 in *(+0.13 mm/-0.38 mm)*

Seals - to specify G, K or M seal, replace "Z" in part number with "G", "K" or "M"

"G" seals only available in size codes 7 thru 13

"K" seals only available in size codes 7 thru 11

Auxiliary end caps - available in all size codes

Allowable working load is 2/3 yield strength

For the Selection Guide, Load Ratings and Speed Limits, see the Spherical Roller Bearings Engineering section on pages 15 - 27.

Note: Dimensions subject to change. Certified dimensions of ordered material furnished on request.

ZHT5000

Photo Shows a Center Pull Take-up Frame with Spherical Roller Bearing Take-up Unit

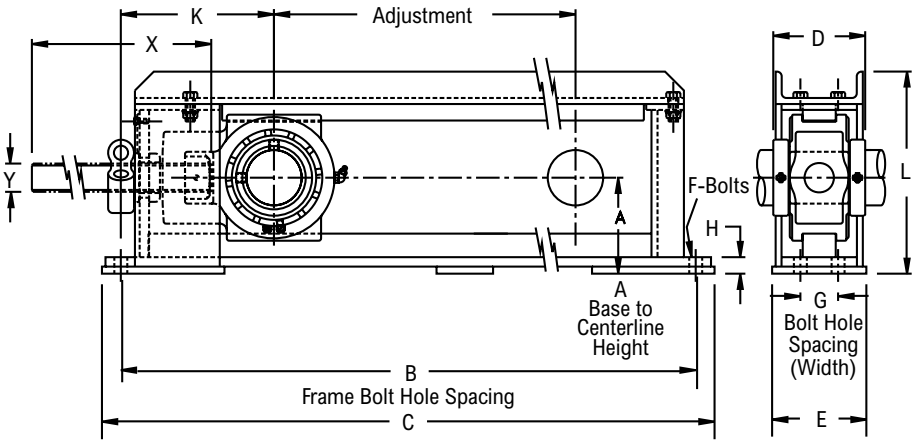

Product Features

- Center pull type frame
- Corrosion-resistant powder coating
- Cast iron housing
- Misalignment capabilities - total of 3°
- Broad range of sealing options
- Factory set clearance & lubrication
- Precision ground & superfinished raceways
- Field interchangeable seals
- See Features and Benefits for additional info on pages 10 - 13.

Bearing Dimensions

Size Code	Shaft Diameter	Complete Take-up Assembly	Travel Length	A Base to Centerline Height	B Frame Bolt Hole Spacing	G Bolt Hole Spacing (Width)	C	D	E	F	H	K	L	X	Y	Adjust.	Allowable Working Load	Approx. Weight
								2-Bolt										
5	1 1/2	ZHT55108	12 18 24 30 36	3 15/16	27 1/2 33 1/2 39 1/2 45 1/2 51 1/2	-	29 1/2 35 1/2 41 1/2 47 1/2 53 1/2	3 13/16	4	5/8	7/8	6 9/16	8 7/16	19 1/2 25 1/2 31 1/2 37 1/2 43 1/2	1-8NC	15 21 27 33 39	12,300	59 69 77 86 95
	1 11/16	ZHT55111																
	40 MM	*ZHT55040MM*	*304.80* *457.20* *609.60* *762.00* *914.40*	*100.01*	*698.50* *850.90* *1003.30* *1155.70* *1308.10*	-	*749.30* *901.70* *1054.10* *1206.50* *1358.90*	*96.80*	*101.60*	*15.88*	*22.22*	*166.70*	*214.31*	*495.30* *647.70* *800.10* *952.50* *1104.90*	*1-8NC*	*381.00* *533.40* *685.80* *838.20* *990.60*	*54710.40*	*267.57* *312.92* *349.20* *390.01* *430.83*
6	1 15/16	ZHT65115	12 18 24 30 36	3 15/16	27 1/2 33 1/2 39 1/2 45 1/2 51 1/2	-	29 1/2 35 1/2 41 1/2 47 1/2 53 1/2	3 13/16	4	5/8	7/8	6 9/16	8 7/16	19 1/2 25 1/2 31 1/2 37 1/2 43 1/2	1-8NC	15 21 27 33 39	12,300	59 69 77 86 95
	50 MM	*ZHT65050MM*	*304.80* *457.20* *609.60* *762.00* *914.40*	*100.01*	*698.50* *850.90* *1003.30* *1155.70* *1308.10*	-	*749.30* *901.70* *1054.10* *1206.50* *1358.90*	*96.80*	*101.60*	*15.88*	*22.22*	*166.70*	*214.31*	*495.30* *647.70* *800.10* *952.50* *1104.90*	*1-8NC*	*381.00* *533.40* *685.80* *838.20* *990.60*	*54710.40*	*267.57* *312.92* *349.20* *390.01* *430.83*
7	2	ZHT75200	12 18 24 30 36	4 7/16	27 1/2 33 1/2 39 1/2 45 1/2 51 1/2	-	29 1/2 35 1/2 41 1/2 47 1/2 53 1/2	4 1/8	4	5/8	1 3/16	6 13/16	9	20 26 32 38 44	1 1/4-7NC	15 21 27 33 39	13,000	70 81 90 98 108
	2 3/16	ZHT75203																
	55 MM	*ZHT75055MM*	*304.80* *457.20* *609.60* *762.00* *914.40*	*112.71*	*698.50* *850.90* *1003.30* *1155.70* *1308.10*	-	*749.30* *901.70* *1054.10* *1206.50* *1358.90*	*104.77*	*101.60*	*15.88*	*30.16*	*173.04*	*228.60*	*508.00* *660.40* *812.80* *965.20* *1117.60*	*1 1/4-7NC*	*381.00* *533.40* *685.80* *838.20* *990.60*	*57824.00*	*317.45* *367.34* *408.15* *444.43* *489.78*
8	2 7/16	ZHT85207	12 18 24 30 36	4 3/8	28 1/2 34 1/2 40 1/2 46 1/2 52 1/2	-	30 1/2 36 1/2 42 1/2 48 1/2 54 1/2	4 3/8	4	3/4	3/4	7 1/2	9 3/16	20 26 32 38 44	1 1/4-7NC	15 21 27 33 39	16,300	77 86 96 107 119
	60 MM	*ZHT85060MM*	*304.80* *457.20* *609.60* *762.00* *914.40*	*111.13*	*723.90* *876.30* *1028.70* *1181.10* *1333.50*	-	*774.70* *927.10* *1079.50* *1231.90* *1384.30*	*111.13*	*101.60*	*19.05*	*19.05*	*190.50*	*233.36*	*508.00* *660.40* *812.80* *965.20* *1117.60*	*1 1/4-7NC*	*381.00* *533.40* *685.80* *838.20* *990.60*	*72502.40*	*349.20* *390.01* *435.36* *485.25* *539.67*
	65 MM	*ZHT85065MM*																

Continued...

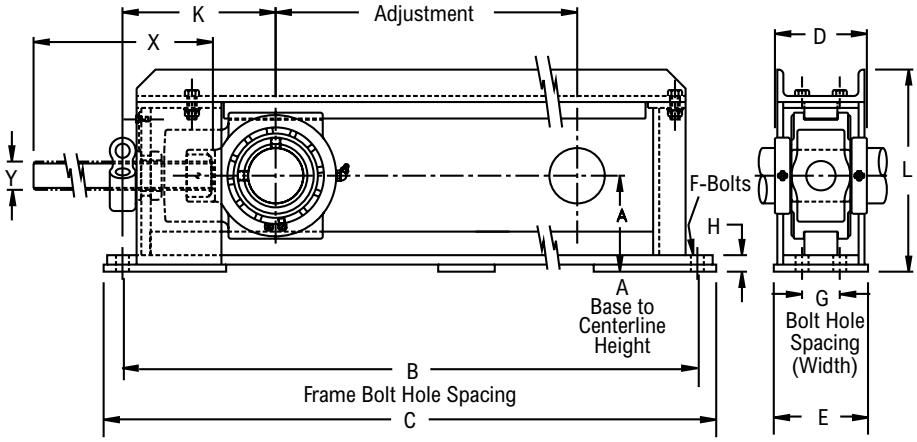

Continued...

Bearing Dimensions

Size Code	Shaft Diameter	Complete Take-up Assembly	Travel Length	A Base to Centerline Height	B Frame Bolt Hole Spacing	G Bolt Hole Spacing (Width)	C	D	E	F	H	K	L	X	Y	Adjust.	Allowable Working Load	Approx. Weight
								4-Bolt										
9	2 1/2	ZHT95208	12 18 24 30 36	5 1/8	30 1/2 36 1/2 42 1/2 48 1/2 54 1/2	2	32 1/2 38 1/2 44 1/2 50 1/2 56 1/2	4 7/8	5	5/8	7/8	8 1/8	10 3/4	21 3/4 27 3/4 33 3/4 39 3/4 45 3/4	1 1/2-6NC	16 22 28 34 40	26,800	128 142 159 174 191
	2 11/16	ZHT95211																
	2 15/16	ZHT95215																
	70 MM	*ZHT95070MM*	*304.80* *457.20* *609.60* *762.00* *914.40*	*130.18*	*774.70* *927.10* *1079.50* *1231.90* *1384.30*	*50.80*	*825.50* *977.90* *1130.30* *1282.70* *1435.10*	*123.83*	*127.00*	*15.88*	*22.22*	*166.70*	*206.38*	*552.45* *704.85* *857.25* *1009.65* *1162.05*	*1 1/2 - 6NC*	*406.40* *558.80* *711.20* *863.60* *1016.00*	*119,206.40*	*580.48* *643.97* *721.07* *789.09* *866.19*
	75 MM	*ZHT95075MM*																
10	3 3/16	ZHT105303	12 18 24 30 36	5 5/8	32 38 44 50 56	2	34 1/4 40 1/4 46 1/4 52 1/4 58 1/4	5 5/16	5	3/4	7/8	8 3/4	11 13/16	22 28 34 40 46	1 3/4-5NC	16 1/4 22 1/4 28 1/4 34 1/4 40 1/4	27,300	152 177 186 205 224
	3 7/16	ZHT105307																
	80 MM	*ZHT105080MM*	*304.80* *457.20* *609.60* *762.00* *914.40*	*142.88*	*812.80* *965.20* *1117.60* *1270.00* *1422.40*	*50.80*	*869.95* *1022.35* *1174.75* *1327.15* *1479.55*	*134.94*	*127.00*	*19.05*	*22.22*	*222.25*	*300.04*	*558.80* *711.20* *863.60* *1016.00* *1168.40*	*1 3/4-5NC*	*444.50* *596.90* *749.30* *901.70* *1054.10*	*121,430.40*	*689.32* *802.70* *843.51* *929.68* *1015.84*
	85 MM	*ZHT105085MM*																
	90 MM	*ZHT105090MM*																
11	3 11/16	ZHT115311	12 18 24 30 36	7	36 42 48 54 60	2 1/2	38 1/2 44 1/2 50 1/2 56 1/2 62 1/2	6 1/4	6	3/4	7/8	10 5/8	14 3/16	26 32 38 44 50	2-4 1/2NC	17 1/2 23 1/2 29 1/2 35 1/2 41 1/2	38,400	241 270 290 311 337
	3 15/16	ZHT115315																
	4	ZHT115400																
	100 MM	*ZHT115100MM*	*304.80* *457.20* *609.60* *762.00* *914.40*	*177.80*	*914.40* *1066.80* *1219.20* *1371.60* *1524.00*	*63.50*	*977.90* *1130.30* *1282.70* *1435.10* *1587.50*	*158.75*	*152.40*	*19.05*	*22.22*	*269.88*	*360.36*	*660.40* *812.80* *965.20* *1117.60* *1270.00*	*2-4 1/2NC*	*444.50* *596.90* *749.30* *901.70* *1054.10*	*170,803.20*	*1092.94* *1224.45* *1315.15* *1410.39* *1528.30*
12	4 3/16	ZHT125403Y	12 18 24 30 36 42	7 1/2	40 3/4 46 3/4 52 3/4 58 3/4 64 3/4 70 3/4	5	45 3/4 51 3/4 57 3/4 63 3/4 69 3/4 75 3/4	6 1/4	8 7/8	1 1/8	1	12 1/4	15 1/2	26 32 38 44 50 56	2- 4 1/2 NC	19 25 31 37 43 49	53,300	331 362 391 410 433 461
	4 7/16	ZHT125407Y																

Continued...

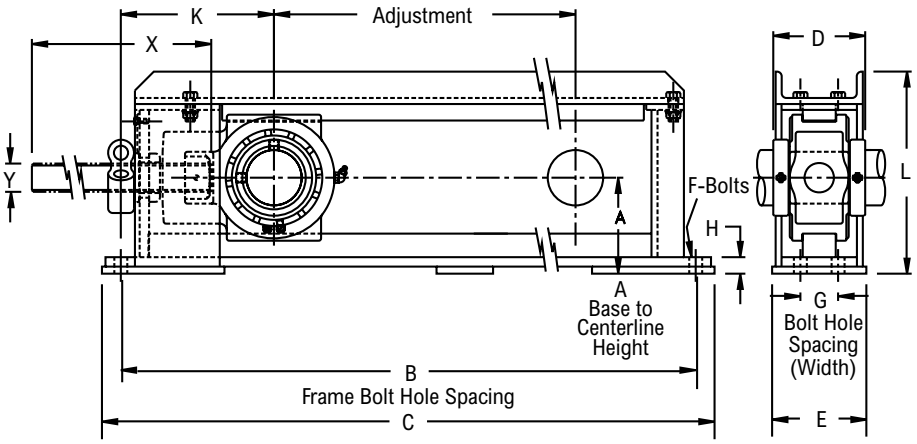

Continued...

Bearing Dimensions

Size Code	Shaft Diameter	Complete Take-up Assembly	Travel Length	A Base to Centerline Height	B Frame Bolt Hole Spacing	G Bolt Hole Spacing (Width)	C	D	E	F	H	K	L	X	Y	Adjust.	Allowable Working Load	Approx. Weight
4-Bolt (continued)																		
12	*110 MM*	*ZHT125110MM*	*304.80* *457.20* *609.60* *762.00* *914.40* *1066.80*	*190.50*	*1035.05* *1187.45* *1339.85* *1492.25* *1644.65* *1797.05*	*127.00*	*1111.25* *1314.45* *1466.85* *1619.25* *1009.65* *1924.05*	*158.75*	*225.43*	*28.58*	*25.40*	*309.88*	*393.70*	*660.40* *812.80* *965.20* *1117.60* *1270.00* *1422.40*	*2-4 1/2NC*	*482.60* *635.00* *787.40* *939.80* *1092.20* *1244.60*	*237,078.40*	*1501.09* *1641.67* *1773.19* *1859.35* *1963.66* *2090.64*
	115 MM	*ZHT125115MM*																
13	$4\ ^{15}/_{16}$	ZHT135415	12 18 24 30 36 42	$8\ ^{1}/_{8}$	44 1/2 50 1/2 56 1/2 62 1/2 68 1/2 74 1/2	$5\ ^{1}/_{2}$	49 1/2 55 1/2 61 1/2 67 1/2 73 1/2 79 1/2	$7\ ^{7}/_{8}$	$9\ ^{7}/_{8}$	$1\ ^{1}/_{8}$	1	$13\ ^{1}/_{2}$	$16\ ^{3}/_{4}$	29 35 41 47 53 59	2 1/4- 4 1/2 NC	20 1/4 26 1/4 32 1/4 38 1/4 44 1/4 50 1/4	68,000	440 460 496 527 555 587
	5	ZHT135500																
	125 MM	*ZHT135125MM*	*304.80* *457.20* *609.60* *762.00* *914.40* *1066.80*	*206.37*	*1130.30* *1282.70* *1435.10* *1587.50* *1739.90* *1892.30*	*139.70*	*1257.30* *1409.70* *1562.10* *1714.50* *1866.90* *2019.30*	*200.00*	*250.83*	*28.50*	*25.40*	*342.90*	*171.45*	*745.49* *1041.40* *1193.80* *1361.19* *1866.90* *2019.30*	*2-4 1/2NC*	*514.35* *666.75* *819.15* *971.55* *1123.95* *1276.35*	*302,464.00*	*1995.40* *2086.10* *2249.36* *2389.95* *2516.93* *2662.05*
	130 MM	*ZHT135135MM*																
14	$5\ ^{7}/_{16}$	ZHT145507	18 30 42	$10\ ^{9}/_{16}$	55 67 79	7	61 73 85	8	12	$1\ ^{3}/_{4}$	$1\ ^{1}/_{2}$	$23\ ^{1}/_{2}$	$22\ ^{1}/_{2}$	36 48 60	3- 4 NC	18 30 42	136,700	1293 1420 1547
	140 MM	*ZHT145140MM*	*457.20* *762.00* *1066.80*	*298.29*	*1397.00* *1701.80* *2006.60*	*177.80*	*1549.40* *1854.20* *2159.00*	*203.20*	*304.80*	*44.45*	*12.70*	*596.90*	*571.50*	*914.40* *1219.20* *1524.00*	*3-4NC*	*457.20* *762.00* *1066.80*	*608,041.60*	*5863.76* *6439.70* *7015.65*
15	$5\ ^{15}/_{16}$	ZHT155515	18 30 42	$10\ ^{9}/_{16}$	55 67 79	7	61 73 85	$8\ ^{1}/_{8}$	12	$1\ ^{3}/_{4}$	$1\ ^{1}/_{2}$	$23\ ^{1}/_{2}$	$22\ ^{1}/_{2}$	36 48 60	3- 4 NC	18 30 42	136,700	1300 1427 1554
	6	ZHT155600																
	150 MM	*ZHT155150MM*	*457.20* *762.00* *1066.80*	*298.29*	*1397.00* *1701.80* *2006.60*	*177.80*	*1549.40* *1854.20* *2159.00*	*206.38*	*304.80*	*44.45*	*12.70*	*596.90*	*571.50*	*914.40* *1219.20* *1524.00*	*3-4NC*	*457.20* *762.00* *1066.80*	*608,041.60*	*5895.50* *6471.45* *7047.39*
	160 MM	*ZHT155160MM*																
16	$6\ ^{7}/_{16}$	ZHT165607	18 30 42	$10\ ^{9}/_{16}$	55 67 79	7	61 73 85	$8\ ^{3}/_{4}$	12	$1\ ^{3}/_{4}$	$1\ ^{1}/_{2}$	$23\ ^{1}/_{2}$	$22\ ^{1}/_{2}$	36 48 60	3-4 NC	18 30 42	136,700	1304 1431 1558
	$6\ ^{15}/_{16}$	ZHT165615																
	7	ZHT165700																
	180 MM	*ZHT165180MM*	*457.20* *762.00* *1066.80*	*298.29*	*1397.00* *1701.80* *2006.60*	*177.80*	*1549.40* *1854.20* *2159.00*	*222.25*	*304.80*	*44.45*	*12.70*	*596.90*	*571.50*	*914.40* *1219.20* *1524.00*	*3-4NC*	*457.20* *762.00* *1066.80*	*608,041.60*	*5913.64* *6489.59* *7065.53*

Additional Notes

Please call 1-866-REXNORD for availability

Metric bore sizes available, see Rex Interchangeability guide

Lubrication fitting tap size: for size code 5 thru 11, 1/8" PT: for all other size codes, 1/4" PT

Bore size = nominal shaft size +.001 in/-.000 in *(+0.03 mm/-0.00 mm)*

Seals - To specify G, K or M seal, replace "Z" in part number with "G", "K" or "M"

"G" seals only available in size codes 5 thru 13

"K" seals only available in size codes 5 thru 11

Auxiliary end caps - available in all size codes

Allowable working load is 2/3 yield strength

For the Selection Guide, Load Ratings and Speed Limits, see the Spherical Roller Bearings Engineering section on pages 15 - 27.

Note: Dimensions subject to change. Certified dimensions of ordered material furnished on request.

ZHT6000

Photo Shows a Center Pull Take-up Frame with Spherical Roller Bearing Take-up Unit

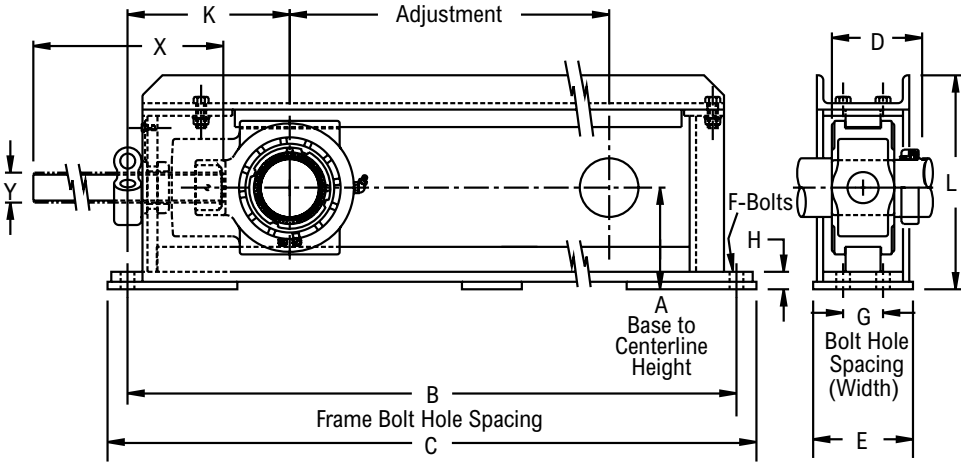

Product Features

- Spyglass Optical Strain Sensor (OSS) Technology
- Positive locking system
- Tapered adapter sleeve
- Center pull type frame
- Corrosion-resistant powder coating
- Cast iron housing
- Misalignment capabilities - total of 3°
- Broad range of sealing options
- Factory set clearance & lubrication
- See Features and Benefits for additional info on pages 10 - 13.

Bearing Dimensions

Size Code	Shaft Diameter	Complete Take-up Assembly	Travel Length	A Base to Centerline Height	B Frame Bolt Hole Spacing	G Bolt Hole Spacing (Width)	C	D	E	F	H	K	L	X	Y	Adjust.	Allowable Working Load	Approx. Weight
							2-Bolt											
5	1 15/16	ZHT56111	12.000 18.000 24.000 30.000 36.000	3 15/16	27 1/2 33 1/2 39 1/2 45 1/2 51 1/2	-	29 1/2 35 1/2 41 1/2 47 1/2 53 1/2	3 41/64	4	5/8	7/8	6 9/16	8 7/16	19 1/2 25 1/2 31 1/2 37 1/2 43 1/2	1- 8 NC	15 21 27 33 39	12,300	59.00 lb 69.00 lb 77.00 lb 86.00 lb 95.00 lb
6	1 15/16	ZHT66115	12 18 24 30 36	3 15/16	27 1/2 33 1/2 39 1/2 45 1/2 51 1/2	-	29 1/2 35 1/2 41 1/2 47 1/2 53 1/2	3 41/64	4	5/8	7/8	6 9/16	8 7/16	19 1/2 25 1/2 31 1/2 37 1/2 43 1/2	1- 8 NC	15 21 27 33 39	12,300	59 69 77 86 95
	45 MM	*ZHT66045MM*	*304.80* *457.20* *609.60* *762.00* *914.40*	*100.01*	*698.50* *850.90* *1003.30* *1155.70* *1308.10*	-	*749.30* *901.70* *1054.10* *1206.50* *1358.90*	*92.47*	*101.60*	*15.88*	*22.22*	*166.70*	*214.31*	*495.30* *647.70* *800.10* *952.50* *1104.90*	*1-8NC*	*381.00* *533.40* *685.80* *838.20* *990.60*	*54,710.40*	*267.57* *312.92* *349.20* *390.01* *430.83*
7	2 3/16	ZHT76203	12 18 24 30 36	4 7/16	27 1/2 33 1/2 39 1/2 45 1/2 51 1/2	-	29 1/2 35 1/2 41 1/2 47 1/2 53 1/2	3 49/64	4	5/8	1 3/16	6 13/16	9	20 26 32 38 44	1 1/4- 7 NC	15 21 27 33 39	13,000	70 81 90 98 108
	55 MM	*ZHT76055MM*	*304.80* *457.20* *609.60* *762.00* *914.40*	*112.71*	*698.50* *850.90* *1003.30* *1155.70* *1308.10*	-	*749.30* *901.70* *1054.10* *1206.50* *1358.90*	*95.65*	*101.60*	*15.88*	*30.16*	*173.04*	*228.60*	*508.00* *660.40* *812.80* *965.20* *1117.60*	*1 1/4- 7NC*	*381.00* *533.40* *685.80* *838.20* *990.60*	*57,824.00*	*317.45* *367.34* *408.15* *444.43* *489.78* *111.13*
8	2 3/8	ZHT86206	12 18 24 30 36	4 3/8	28 1/2 34 1/2 40 1/2 46 1/2 52 1/2	-	30 1/2 36 1/2 42 1/2 48 1/2 54 1/2	4 5/32	4	3/4	3/4	7 1/2	9 3/16	20 26 32 38 44	1 1/4- 7 NC	15 21 27 33 39	16,300	77 86 96 107 119
	2 7/16	ZHT86207																
	60 MM	*ZHT86060MM*	*304.80* *457.20* *609.60* *762.00* *914.40*	*111.13*	*723.90* *876.30* *1028.70* *1181.10* *1333.50*	-	*774.70* *927.10* *1079.50* *1231.90* *1384.30*	*105.57*	*101.60*	*19.05*	*19.05*	*190.50*	*233.36*	*508.00* *660.40* *812.80* *965.20* *1117.60*	*1 1/4- 7NC*	*381.00* *533.40* *685.80* *838.20* *990.60*	*72502.40*	*349.20* *390.01* *435.36* *485.25* *539.67*

Continued...

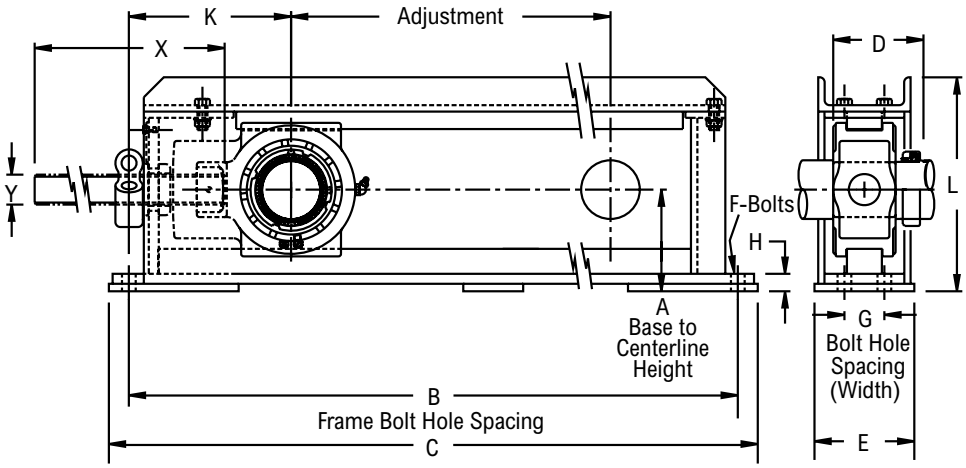

Continued...

Bearing Dimensions

Size Code	Shaft Diameter	Complete Take-up Assembly	Travel Length	A Base to Centerline Height	B Frame Bolt Hole Spacing	G Bolt Hole Spacing (Width)	C	D	E	F	H	K	L	X	Y	Adjust.	Allowable Working Load	Approx. Weight
								4-Bolt										
9	2 11/16	ZHT96211	12 18 24 30 36	5 1/8	30 1/2 36 1/2 42 1/2 48 1/2 54 1/2	2	32 1/2 38 1/2 44 1/2 50 1/2 56 1/2	4 17/32	5	5/8	7/8	8 1/8	10 3/4	21 3/4 27 3/4 33 3/4 39 3/4 45 3/4	1 1/2- 6 NC	16 22 28 34 40	26,800	128 142 159 174 191
	2 3/4	ZHT96212																
	2 15/16	ZHT96215																
	70 MM	*ZHT96070MM*	*304.80* *457.20* *609.60* *762.00* *914.40*	*130.18*	*774.70* *927.10* *1079.50* *1231.90* *1384.30*	*50.80*	*825.50* *977.90* *1130.30* *1282.70* *1435.10*	*115.09*	*127.00*	*15.88*	*22.22*	*166.70*	*206.38*	*552.45* *704.85* *857.25* *1009.65* *1162.05*	*1 1/2 -* *6NC*	*406.40* *558.80* *711.20* *863.60* *1016.00*	*119206.40*	*580.48* *643.97* *721.07* *789.09* *866.19*
	75 MM	*ZHT96075MM*																
10	3 3/16	ZHT106303	12 18 24 30 36	5 5/8	32 38 44 50 56	2	34 1/4 40 1/4 46 1/4 52 1/4 58 1/4	5 9/64	5	3/4	7/8	8 3/4	11 13/16	22 28 34 40 46	1 3/4- 5 NC	16 1/4 22 1/4 28 1/4 34 1/4 40 1/4	27,300	152 177 186 205 224
	3 7/16	ZHT106307																
	80 MM	*ZHT106080MM*	*304.80* *457.20* *609.60* *762.00* *914.40*	*142.88*	*812.80* *965.20* *1117.60* *1270.00* *1422.40*	*50.80*	*869.95* *1022.35* *1174.75* *1327.15* *1479.55*	*130.57*	*127.00*	*19.05*	*22.22*	*222.25*	*300.04*	*558.80* *711.20* *863.60* *1016.00* *1168.40*	*1 3/4-* *5NC*	*444.50* *596.90* *749.30* *901.70* *1054.10*	*121,430.40*	*689.32* *802.70* *843.51* *929.68* *1015.84*
	85 MM	*ZHT106085MM*																
11	3 11/16	ZHT116311	12 18 24 30 36	7	36 42 48 54 60	2 1/2	38 1/2 44 1/2 50 1/2 56 1/2 62 1/2	5 31/32	6	3/4	7/8	10 5/8	14 3/16	26 32 38 44 50	2- 4 1/2 NC	17 1/2 23 1/2 29 1/2 35 1/2 41 1/2	38,400	241 270 290 311 337
	3 15/16	ZHT116315																
	90 MM	*ZHT116090MM*	*304.80* *457.20* *609.60* *762.00* *914.40*	*177.80*	*914.40* *1066.80* *1219.20* *1371.60* *1524.00*	*63.50*	*977.90* *1130.30* *1282.70* *1435.10* *1587.50*	*151.61*	*152.40*	*19.05*	*22.22*	*269.88*	*360.36*	*660.40* *812.80* *965.20* *1117.60* *1270.00*	*2-4* *1/2NC*	*444.50* *596.90* *749.30* *901.70* *1054.10*	*170803.20*	*1092.94* *1224.45* *1315.15* *1410.39* *1528.30*
	100 MM	*ZHT116100MM*																
12	4 3/16	ZHT126403Y	12 18 24 30 36 42	7 1/2	40 3/4 46 3/4 52 3/4 58 3/4 64 3/4 70 3/4	5	45 3/4 51 3/4 57 3/4 63 3/4 69 3/4 75 3/4	6 1/4	8 7/8	1 1/8	1	12 1/4	15 1/2	26 32 38 44 50 56	2-4 1/2 NC	19 25 31 37 43 49	53,300	331 362 391 410 433 461
	4 7/16	ZHT126407Y																
	110 MM	*ZHT126110MM*	*304.80* *457.20* *609.60* *762.00* *914.40* *1066.80*	*190.50*	*1035.05* *1187.45* *1339.85* *1492.25* *1644.65* *1797.05*	*127.00*	*1111.25* *1314.45* *1466.85* *1619.25* *1009.65* *1924.05*	*158.75*	*225.43*	*28.58*	*25.40*	*309.88*	*393.70*	*660.40* *812.80* *965.20* *1117.60* *1270.00* *1422.40*	*2-4* *1/2NC*	*482.60* *635.00* *787.40* *939.80* *1092.20* *1244.60*	*237,078.40*	*1501.09* *1641.67* *1773.19* *1859.35* *1963.66* *2090.64*

Continued...

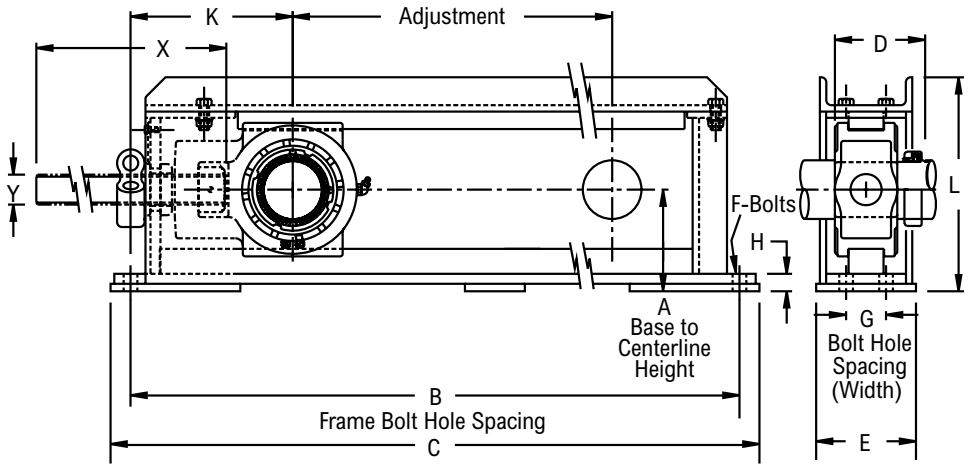

Continued...

Bearing Dimensions

Size Code	Shaft Diameter	Complete Take-up Assembly	Travel Length	A Base to Centerline Height	B Frame Bolt Hole Spacing	G Bolt Hole Spacing (Width)	C	D	E	F	H	K	L	X	Y	Adjust.	Allowable Working Load	Approx. Weight
4-Bolt (continued)																		
13	4 15/16	ZHT136415	12 18 24 30 36 42	8 1/8	44 1/2 50 1/2 56 1/2 62 1/2 68 1/2 74 1/2	5 1/2	49 1/2 55 1/2 61 1/2 67 1/2 73 1/2 79 1/2	7 15/16	9 7/8	1 1/8	1	13 1/2	16 3/4	29 35 41 47 53 59	2 1/4- 4 1/2 NC	20 1/4 26 1/4 32 1/4 38 1/4 44 1/4 50 1/4	68,000	440 460 496 527 555 587
	125 MM	*ZHT136125MM*	*304.80* *457.20* *609.60* *762.00* *914.40* *1066.80*	*206.37*	*1130.30* *1282.70* *1435.10* *1587.50* *1739.90* *1892.30*	*139.70*	*1257.30* *1409.70* *1562.10* *1714.50* *1866.90* *2019.30*	*198.44*	*250.83*	*28.50*	*25.40*	*342.90*	*171.45*	*745.49* *1041.40* *1193.80* *1361.19* *1866.90* *2019.30*	*2-4* *1/2NC*	*514.35* *666.75* *819.15* *971.55* *1123.95* *1276.35*	*302,464.00*	*1995.40* *2086.10* *2249.36* *2389.95* *2516.93* *2662.05*

Additional Notes

Please call 1-866-REXNORD for availability

Lubrication fitting tap size: for size code 6 thru 11, 1/8" PT: for all other size codes, 1/4" PT

Seals - To specify G, K or M seal, replace “Z” in part number with “G”, “K” or “M”

“K” seals only available in size codes 5 thru 11

Auxiliary end caps - available in all size codes

Allowable working load is 2/3 yield strength

For the Selection Guide, Load Ratings and Speed Limits, see the Spherical Roller Bearings Engineering section on pages 15 - 27.

Note: Dimensions subject to change. Certified dimensions of ordered material furnished on request.

ZST5000

Photo Shows a Center Pull Spring Loaded Take-up Frame with Spherical Roller Bearing Take-up Unit

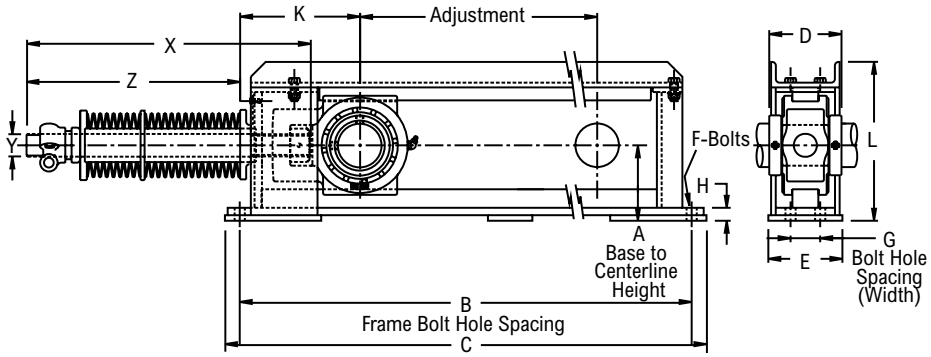

Product Features

- Center pull type spring loaded frame
- Corrosion-resistant powder coating
- Cast iron housing
- Misalignment capabilities - total of 3°
- Broad range of sealing options
- Factory set clearance & lubrication
- Precision ground & superfinished raceways
- Field interchangeable seals
- See Features and Benefits for additional info on pages 10 - 13.

Bearing Dimensions

Size Code	Shaft Diameter	Part Number	A	B	C	D	E	F	G	H	K	L	X	Y	Z	Working Load Inches of Spring Deflection 1	3	5	Allowable Working Load	Approx. Weight
2-Bolt																				
5	1 1/2	ZST5510818	3 15/16	33 1/2	35 1/2	3 13/16	4	5/8	-	7/8	6 9/16	8 7/16	43	1-8 NC	39	870	1,800	3,400	12,300	69.00
	1 11/16	ZST5511118																		
	40.00	*ZST55040MM18*	*100.01*	*851.00*	*902.00*	*96.84*	*101.60*	*16.00*	*-*	*22.23*	*166.69*	*214.31*	*648.00*	*1-8 NC*	*990.60*	*395*	*816*	*1,540*	*5,580*	*31.00*
	45.00	*ZST55045MM18*																		
6	1 15/16	ZST6511518	3 15/16	33 1/2	35 1/2	3 13/16	4	5/8	-	7/8	6 9/16	8 7/16	43	1-8 NC	39	870	1,800	3,400	12,300	69.00
	50.00	*ZST65050MM18*	*100.01*	*851.00*	*902.00*	*96.84*	*101.60*	*16.00*	*-*	*22.23*	*166.69*	*214.31*	*648.00*	*1-8 NC*	*990.60*	*395*	*816*	*1,540*	*5,580*	*31.00*
7	2	ZST7520018	4 7/16	33 1/2	35 1/2	4 1/8	4	5/8	-	1 3/16	6 13/16	9	43	1 1/4 -7 NC	39	870	1,800	3,400	13,000	81.00
	2 3/16	ZST7520318																		
	55.00	*ZST75055MM18*	*112.71*	*851.00*	*902.00*	*104.78*	*101.60*	*16.00*	*-*	*30.16*	*173.04*	*228.60*	*660.00*	*1 1/4 -7 NC*	*990.60*	*395*	*816*	*1,540*	*5,890*	*37.00*
8	2 7/16	ZST8520718	4 3/8	34 1/2	36 1/2	4 3/8	4	3/4	-	3/4	7 1/2	9 3/16	43	1 1/4 -7 NC	39	870	1,800	3,400	16,300	86.00
	60.00	*ZST85060MM18*	*111.13*	*876.00*	*927.00*	*111.13*	*101.60*	*19.00*	*-*	*19.05*	*190.50*	*233.36*	*660.00*	*1 1/4 -7 NC*	*990.60*	*395*	*816*	*1,540*	*7,390*	*39.00*
	65.00	*ZST85065MM18*																		
4-Bolt																				
9	2 1/2	ZST9520818	5 1/8	36 1/2	38 1/2	4 7/8	5	5/8	2	7/8	8 1/8	10 3/4	45	1 1/2-6 NC	40 1/4	1,300	3,400	5,250	26,800	142.00
	2 11/16	ZST9521118																		
	2 15/16	ZST9521518																		
	70.00	*ZST95070MM18*	*130.18*	*927.00*	*978.00*	*123.83*	*127.00*	*16.00*	*50.80*	*22.23*	*206.38*	*273.05*	*705.00*	*1 1/2-6 NC*	*1,022.35*	*590*	*1,540*	*2,380*	*12,150*	*65.00*
	75.00	*ZST95075MM18*																		
10	3 3/16	ZST10530318	5 5/8	38	40 1/4	5 5/16	5	3/4	2	7/8	8 3/4	11 13/16	45	1 3/4-5 NC	40 1/4	1,800	3,700	6,800	27,300	177.00
	3 7/16	ZST10530718																		
	80.00	*ZST105080MM18*	*142.88*	*965.00*	*1,022.00*	*134.94*	*127.00*	*19.00*	*50.80*	*22.23*	*222.25*	*300.04*	*711.00*	*1 3/4-5 NC*	*1,022.35*	*816*	*1,680*	*3,080*	*12,380*	*80.00*
	85.00	*ZST105085MM18*																		
	90.00	*ZST105090MM18*																		
11	3 11/16	ZST11531118	7	42	44 1/2	6 1/8	6	3/4	2 1/2	7/8	10 5/8	14 3/16	48 1/2	2-4 1/2 NC	41	2,600	5,200	9,400	38,400	270.00
	3 15/16	ZST11531518																		
	4	ZST11540018																		
	100.00	*ZHT115100MM18*	*177.80*	*1,067.00*	*1,130.00*	*155.58*	*152.40*	*19.00*	*63.50*	*22.23*	*269.88*	*360.36*	*812.00*	*2-4 1/2 NC*	*1,041.40*	*1,180*	*2,350*	*4,260*	*17,410*	*123.00*

Continued...

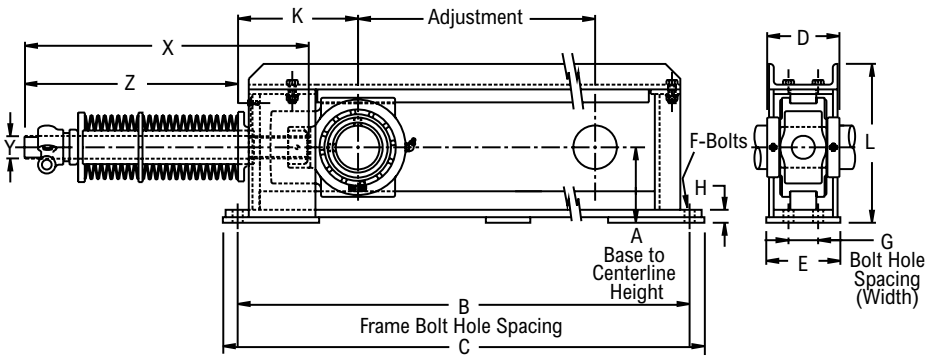

Continued...

Bearing Dimensions

Size Code	Shaft Diameter	Part Number	A	B	C	D	E	F	G	H	K	L	X	Y	Z	Working Load Inches of Spring Deflection 1	3	5	Allowable Working Load	Approx. Weight
4-Bolt (continued)																				
12	4 3/16	ZST125403Y18	7 1/2	46 3/4	51 3/4	6 1/4	8 7/8	1 1/8	5	1	12 1/4	15 1/2	48 1/2	2-4 1/2 NC	41	2,600	5,200	9,400	53,300	362.00
	4 7/16	ZST125407Y18																		
	110.00	*ZST125110MM18*	*190.50*	*1,187.00*	*1,314.00*	*158.75*	*225.43*	*28.00*	*127.00*	*25.40*	*311.15*	*393.70*	*813.00*	*2-4 1/2 NC*	*1,041.40*	*1,180*	*2,350*	*4,260*	*24,170*	*164.00*
	115.00	*ZST125115MM18*																		
13	4 15/16	ZST13541518	8 1/8	50 1/2	55 1/2	7 7/8	9 7/8	1 1/8	5 1/2	1	13 1/2	16 3/4	52	2 1/4-4 1/2 NC	45 1/2	1,180	2,350	4,260	68,000	460.00
	5	ZST13550018														4,475	11,200	18,000		
	125.00	*ZST135125MM18*	*206.38*	*1,283.00*	*1,410.00*	*200.03*	*250.83*	*28.00*	*139.70*	*25.40*	*342.90*	*425.45*	*889.00*	*2 1/4-4 1/2 NC*	*1,155.70*	*2,030*	*5,080*	*8,160*	*30,800*	*209.00*
	130.00	*ZST135130MM18*																		

Additional Notes

Please call 1-866-REXNORD for availability

Metric bore sizes available, see Rex Interchangeability guide

Lubrication fitting tap size: for size code 5 thru 11, 1/8" PT: for all other size codes, 1/4" PT

Bore size = nominal shaft size +.001 in/-.000 in *(+0.03 mm/-0.00 mm)*

Seals - To specify "G", K or M seal, replace "Z" in part number with "G", "K" or "M"

"K" seals only available in size codes 5 thru 11

Auxiliary end caps - available in all size codes

Allowable frame load is 2/3 yield strength

For the Selection Guide, Load Ratings and Speed Limits, see the Spherical Roller Bearings Engineering section on pages 15 - 27.

Note: Dimensions subject to change. Certified dimensions of ordered material furnished on request.

ZNT2000

Photo Shows a Protected Screw Type Take-up Frame with Spherical Roller Bearing Take-up Unit

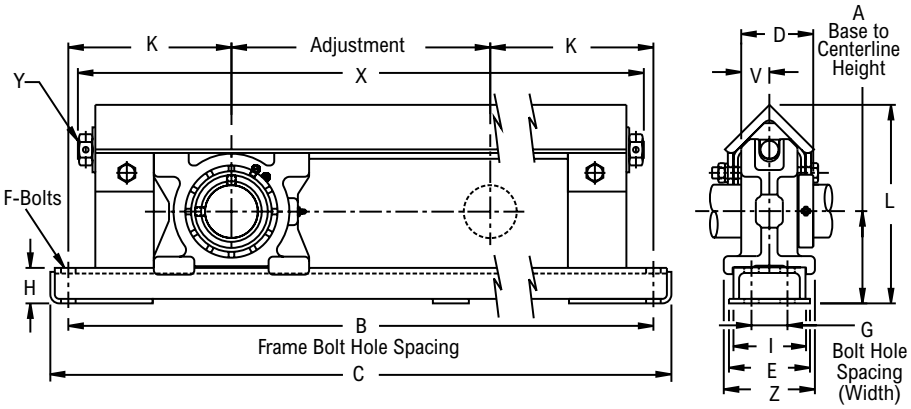

Product Features

- Protected screw type frame
- Corrosion-resistant powder coating
- Cast iron housing
- Misalignment capabilities - total of 3°
- Broad range of sealing options
- Factory set clearance & lubrication
- Precision ground & superfinished raceways
- Field interchangeable seals
- See Features and Benefits for additional info on pages 10 - 13.

Bearing Dimensions

Size Code	Shaft Diameter	Complete Take-up Assembly	Travel Length	A Base to Centerline Height	B Frame Bolt Hole Spacing	G Bolt Hole Spacing (Width)	C	D	E	F	H	I	K	L	V	X	Y	Z	Adjust.	Allowable Working Load	Approx. Weight
2-Bolt																					
6	1 15/16	ZNT62115	12 18 24 30 36	3 15/16	26 1/2 32 1/2 38 1/2 44 1/2 50 1/2	-	28 1/2 34 1/2 40 1/2 46 1/2 52 1/2	3 1/8	3 1/2	5/8	1 3/4	3	7 1/4	8 1/4	1 7/32	25 3/8 31 3/8 37 3/8 43 3/8 49 3/8	3/4 - 10NC	3 13/16	12 18 24 30 36	3,000	45 50 56 63 70
	2	ZNT62200																			
	50 MM	*ZNT62050MM*	*304.80* *457.20* *609.60* *762.00* *914.40*	*100.01*	*673.10* *825.50* *977.90* *1130.30* *1282.70*	-	*723.90* *876.30* *1028.70* *1181.10* *1333.50*	*79.38*	*88.90*	*15.88*	*44.45*	*76.20*	*184.15*	*209.55*	*30.96*	*644.53* *796.93* *949.33* *1101.73* *1254.13*	*3/4-10NC*		*304.80* *457.20* *609.60* *762.00* *914.40*	*13344.00*	*235.82* *263.03* *294.78* *326.52*
7	2 3/16	ZNT72203	12 18 24 30 36	4 3/16	27 1/2 33 1/2 39 1/2 45 1/2 51 1/2	-	29 1/2 35 1/2 41 1/2 47 1/2 53 1/2	3 5/16	3 1/2	5/8	1 3/4	3	7 3/4	8 11/16	1 9/32	26 3/8 32 3/8 38 3/8 44 3/8 50 3/8	3/4 - 10NC	3 13/16	12 18 24 30 36	3,600	49 54 66 73 78
	2 1/4	ZNT72204																			
	55 MM	*ZNT72055MM*	*304.80* *457.20* *609.60* *762.00* *914.40*	*106.36*	*698.50* *850.90* *1003.30* *1155.70* *1308.10*	-	*749.30* *901.70* *1054.10* *1206.50* *1358.90*	*84.14*	*88.90*	*15.88*	*44.45*	*76.20*	*196.85*	*220.66*	*32.54*	*669.93* *822.33* *974.73* *1127.13* *1279.53*	*3/4-10NC*		*304.80* *457.20* *609.60* *762.00* *914.40*	*16012.80*	*222.22* *244.89* *299.31* *331.06* *353.73*
8	2 3/8	ZNT82206	12 18 24 30 36	4 3/8	28 1/2 34 1/2 40 1/2 46 1/2 52 1/2	-	30 1/2 36 1/2 42 1/2 48 1/2 54 1/2	3 1/2	3 1/2	3/4	1 3/4	3	8 1/4	9 1/8	1 5/16	27 3/4 33 3/4 39 3/4 45 3/4 51 3/4	7/8-9NC	3 15/16	12 18 24 30 36	4,400	59 63 74 79 85
	2 7/16	ZNT82207																			
	2 1/2	ZNT82208																			
	60 MM	*ZNT82060MM*	*304.80* *457.20* *609.60* *762.00* *914.40*	*111.13*	*723.90* *876.30* *1028.70* *1181.10* *1333.50*	-	*774.70* *927.10* *1079.50* *1231.90* *1384.30*	*88.90*	*88.90*	*19.05*	*44.45*	*76.20*	*209.55*	*231.78*	*33.34*	*704.85* *857.25* *1009.65* *1162.05* *1314.45*	*7/8-9NC*		*304.80* *457.20* *609.60* *762.00* *914.40*	*19751.20*	*267.57* *285.71* *335.59* *358.27* *385.48*
	65 MM	*ZNT82065MM*																			
4-Bolt																					
9	331.06	ZNT92211	12 18 24 30 36	5 1/8	30 1/2 36 1/2 42 1/2 48 1/2 54 1/2	2	32 1/2 38 1/2 44 1/2 50 1/2 56 1/2	4	4 1/2	3/4	2	4	9 1/4	10 5/8	1 9/16	30 36 42 48 54	1-8NC	5 1/16	12 18 24 30 36	6,800	85 93 113 120 128
	353.73	ZNT92215																			
	3	ZNT92300																			

Continued...

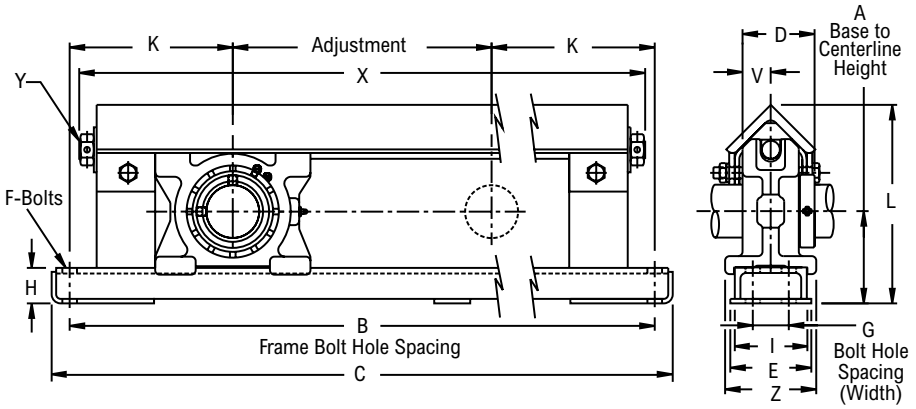

Continued...

Bearing Dimensions

Size Code	Shaft Diameter	Complete Take-up Assembly	Travel Length	A Base to Centerline Height	B Frame Bolt Hole Spacing	G Bolt Hole Spacing (Width)	C	D	E	F	H	I	K	L	V	X	Y	Z	Adjust.	Allowable Working Load	Approx. Weight
4-Bolt (continued)																					
9	*70 MM*	*ZNT92070MM*	*304.80* *457.20* *609.60* *762.00* *914.40*	*130.18*	*774.70* *927.10* *1079.50* *1231.90* *1384.30*	*50.80*	*825.50* *977.90* *1130.30* *1282.70* *1435.10*	*101.60*	*114.30*	*19.05*	*50.80*	*101.60*	*234.95*	*269.88*	*39.69*	*762.00* *914.40* *1066.80* *1219.20* *1371.60*	*1-8NC*		*304.80* *457.20* *609.60* *762.00* *914.40*	*30246.40*	*385.48* *421.76* *512.46* *544.20* *580.48*
	75 MM	*ZNT92075MM*																			
10	3 3/16	ZNT102303	12 18 24 30 36	5 5/8	32 38 44 50 56	2	34 1/4 40 1/4 46 1/4 52 1/4 58 1/4	4 3/8	4 1/2	3/4	2	4	10	11 3/4	1 23/32	32 38 44 50 56	1 1/8-7NC	5 3/16	12 18 24 30 36	8,400	118 127 145 154 166
	3 7/16	ZNT102307																			
	3 1/2	ZNT102308																			
	80 MM	*ZNT102080MM*	*304.80* *457.20* *609.60* *762.00* *914.40*		*812.80* *965.20* *1117.60* *1270.00* *1422.40*		*869.95* *1022.35* *1174.75* *1327.15* *1479.55*	*111.13*	*114.30*	*19.05*	*50.80*	*101.06*	*254.00*	*298.45*	*43.66*	*812.80* *965.20* *1117.60* *1270.00* *1422.40*	*1 1/8-7NC*		*304.80* *457.20* *609.60* *762.00* *914.40*	*37363.20*	*535.13* *575.95* *657.58* *698.39* *752.81*
	85 MM	*ZNT102085MM*																			
11	3 11/16	ZNT112311	12 18 24 30 36	7	36 42 48 54 60	2 1/2	38 1/2 44 1/2 50 1/2 56 1/2 62 1/2	5 3/16	5 1/2	3/4	2 1/4	5	12	14 1/2	2 1/16	36 5/16 42 5/16 48 5/16 54 5/16 60 5/16	1 1/4-7NC	6 3/8	12 18 24 30 36	15,600	209 217 249 269 279
	3 15/16	ZNT112315																			
	4	ZNT112400																			
	100 MM	*ZNT112100MM*	*304.80* *457.20* *609.60* *762.00* *914.40*	*177.80*	*914.40* *1066.80* *1219.20* *1371.60* *1524.00*	*63.50*	*977.90* *1130.30* *1282.70* *1435.10* *1587.50*	*131.76*	*139.70*	*19.05*	*57.15*	*127.00*	*304.80*	*368.30*	*52.39*	*922.35* *1074.75* *1227.15* *1379.55* *1531.95*	*1 1/4-7NC*		*304.80* *457.20* *609.60* *762.00* *914.40*	*69388.80*	*947.82* *984.10* *1129.22* *1219.92* *1265.27*

Additional Notes

Please call 1-866-REXNORD for availability
Metric bore sizes available, see Rex Interchangeability guide
Lubrication fitting tap size, 1/8" PT
Bore size = nominal shaft size +.001 in/-.000 in *(+0.03 mm/-0.00 mm)*
Seals - To specify "G", K or M seal, replace "Z" in part number with "G", "K" or "M"
Auxiliary end caps - available in all size codes
Allowable working load is 2/3 yield strength

For the Selection Guide, Load Ratings and Speed Limits, see the Spherical Roller Bearings Engineering section on pages 15 - 27.

Note: Dimensions subject to change. Certified dimensions of ordered material furnished on request.

ZNT3000

Photo Shows a Protected Screw Type Take-up Frame with Spherical Roller Bearing Take-up Unit

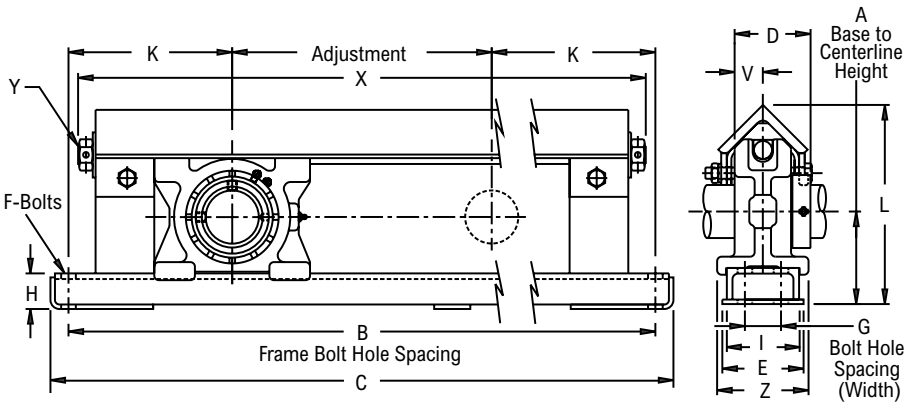

Product Features

- Protected screw type frame
- Corrosion-resistant powder coating
- Cast iron housing
- Misalignment capabilities - total of 3°
- Broad range of sealing options
- Factory set clearance & lubrication
- Precision ground & superfinished raceways
- Field interchangeable seals
- See Features and Benefits for additional info on pages 10 - 13.

Bearing Dimensions

Size Code	Shaft Diameter	Complete Take-up Assembly	Travel Length	A Base to Centerline Height	B Frame Bolt Hole Spacing	G Bolt Hole Spacing (Width)	C	D	E	F	H	I	K	L	V	X	Y	Z	Adjust.	Allowable Working Load	Approx. Weight
2-Bolt																					
6	1 15/16	ZNT63115	12 18 24 30 36	3 15/16	26 1/2 32 1/2 38 1/2 44 1/2 50 1/2	-	28 1/2 34 1/2 40 1/2 46 1/2 52 1/2	3 9/32	3 1/2	5/8	1 3/4	3	7 1/4	8 1/4	1 7/32	25 3/8 31 3/8 37 3/8 43 3/8 49 3/8	3/4- 10 NC	3 13/16	12 18 24 30 36	3,000	45 50 56 63 70
7	2 3/16	ZNT73203	12 18 24 30 36	4 3/16	27 1/2 33 1/2 39 1/2 45 1/2 51 1/2	-	29 1/2 35 1/2 41 1/2 47 1/2 53 1/2	3 1/2	3 1/2	5/8	1 3/4	3	7 3/4	8 11/16	1 9/32	26 3/8 32 3/8 38 3/8 44 3/8 50 3/8	3/4- 10 NC	3 13/16	12 18 24 30 36	3,600	49 54 66 73 78
8	2 7/16	ZNT83207	12 18 24 30 36	4 3/8	28 1/2 34 1/2 40 1/2 46 1/2 52 1/2	-	30 1/2 36 1/2 42 1/2 48 1/2 54 1/2	3 21/32	3 1/2	3/4	1 3/4	3	8 1/4	9 1/8	1 5/16	27 3/4 33 3/4 39 3/4 45 3/4 51 3/4	7/8- 9 NC	3 15/16	12 18 24 30 36	4,400	59 63 74 79 85
	2 1/2	ZNT83208																			
4-Bolt																					
9	2 11/16	ZNT93211	12 18 24 30 36	5 1/8	30 1/2 36 1/2 42 1/2 48 1/2 54 1/2	2	32 1/2 38 1/2 44 1/2 50 1/2 56 1/2	4 13/64	4 1/2	3/4	2	4	9 1/4	10 5/8	1 9/16	30 36 42 48 54	1- 8 NC	5 1/16	12 18 24 30 36	6,800	85 93 113 120 128
	2 15/16	ZNT93215																			
10	3 7/16	ZNT103307	12 18 24 30 36	5 5/8	32 38 44 50 56	2	34 1/4 40 1/4 46 1/4 52 1/4 58 1/4	4 37/64	4 1/2	3/4	2	4	10	11 3/4	1 23/32	32 38 44 50 56	1 1/8- 7 NC	5 3/16	12 18 24 30 36	8,400	118 127 145 154 166
	3 1/2	ZNT103308																			
11	3 15/16	ZNT113315	12 18 24 30 36	7	36 42 48 54 60	2 1/2	38 1/2 44 1/2 50 1/2 56 1/2 62 1/2	5 3/16	5 1/2	3/4	2 1/4	5	12	14 1/2	2 1/16	36 5/16 42 5/16 48 5/16 54 5/16 60 5/16	1 1/4- 7 NC	6 3/8	12 18 24 30 36	15,600	209 217 249 269 279

Additional Notes

- Please call 1-866-REXNORD for availability
- Lubrication fitting tap size, 1/8" PT
- Bore size = nominal shaft size +.001 in/-.000 in *(+0.03 mm/-0.00 mm)*
- Seals - To specify G, K or M seal, replace "Z" in part number with "G", "K" or "M"
- Auxiliary end caps - available in all size codes
- Allowable working load is 2/3 yield strength
- For the Selection Guide, Load Ratings and Speed Limits, see the Spherical Roller Bearings Engineering section on pages 15 - 27.

Note: Dimensions subject to change. Certified dimensions of ordered material furnished on request.

ZNT5000

Photo Shows a Protected Screw Type Take-up Frame with Spherical Roller Bearing Take-up Unit

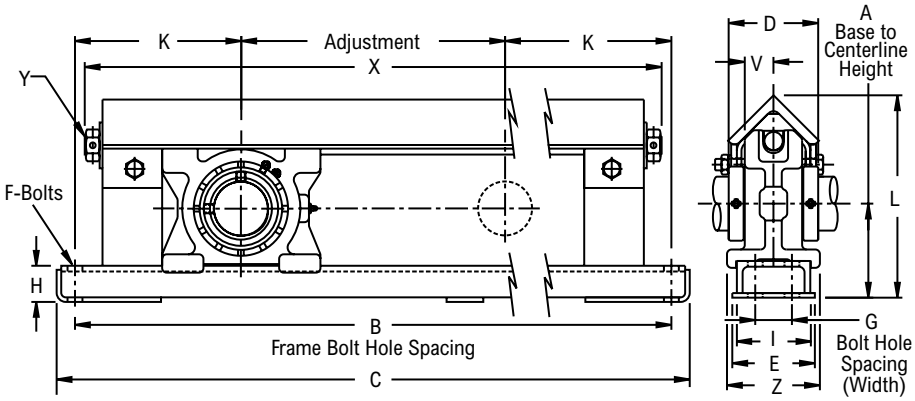

Product Features

- Protected screw type frame
- Corrosion-resistant powder coating
- Cast iron housing
- Misalignment capabilities - total of 3°
- Broad range of sealing options
- Factory set clearance & lubrication
- Precision ground & superfinished raceways
- Field interchangeable seals
- See Features and Benefits for additional info on pages 10 - 13.

Bearing Dimensions

Size Code	Shaft Diameter	Complete Take-up Assembly	Travel Length	A Base to Centerline Height	B Frame Bolt Hole Spacing	G Bolt Hole Spacing (Width)	C	D	E	F	H	I	K	L	V	X	Y	Z	Adjust.	Allowable Working Load	Approx. Weight
2-Bolt																					
6	1 15/16	ZNT65115	12 18 24 30 36	3 15/16	26 1/2 32 1/2 38 1/2 44 1/2 50 1/2	-	28 1/2 34 1/2 40 1/2 46 1/2 52 1/2	3 13/16	3 1/2	5/8	1 3/4	3	7 1/4	8 1/4	1 7/32	25 3/8 31 3/8 37 3/8 43 3/8 49 3/8	3/4- 10 NC	3 13/16	12 18 24 30 36	3,000	47 52 58 65 72
	50 MM	*ZNT65050MM*	*304.80* *457.20* *609.60* *762.00* *914.40*	*100.01*	*673.10* *825.50* *977.90* *1130.30* *1282.70*	-	*723.90* *876.30* *1028.70* *1181.10* *1333.50*	*46.04*	*88.90*	*15.88*	*44.45*	*76.20*	*184.15*	*209.55*	*30.96*	*644.53* *796.93* *949.33* *1101.73* *1254.13*	*3/4-* *10NC*		*304.80* *457.20* *609.60* *762.00* *914.40*	*13344.00*	*204.08* *226.75* *253.96* *285.71* *317.45*
7	2	ZNT75200	12 18 24 30 36	4 3/16	27 1/2 33 1/2 39 1/2 45 1/2 51 1/2	-	29 1/2 35 1/2 41 1/2 47 1/2 53 1/2	4 1/8	3 1/2	5/8	1 3/4	3	7 3/4	8 11/16	1 9/32	26 3/8 32 3/8 38 3/8 44 3/8 50 3/8	3/4- 10 NC	3 13/16	12 18 24 30 36	3,600	51 56 68 75 80
	2 3/16	ZNT75203																			
	55 MM	*ZNT75055MM*	*304.80* *457.20* *609.60* *762.00* *914.40*	*106.36*	*698.50* *850.90* *1003.30* *1155.70* *1308.10*	-	*749.30* *901.70* *1054.10* *1206.50* *1358.90*	*104.78*	*88.90*	*15.88*	*44.45*	*76.20*	*196.85*	*220.66*	*32.54*	*669.93* *822.33* *974.73* *1127.13* *1279.53*	*3/4-* *10NC*		*304.80* *457.20* *609.60* *762.00* *914.40*	*16012.80*	*231.29* *253.96* *308.38* *340.13* *362.80*
8	2 7/16	ZNT85207	12 18 24 30 36	4 3/8	28 1/2 34 1/2 40 1/2 46 1/2 52 1/2	-	30 1/2 36 1/2 42 1/2 48 1/2 54 1/2	4 3/8	3 1/2	3/4	1 3/4	3	8 1/4	9 1/8	1 5/16	27 3/4 33 3/4 39 3/4 45 3/4 51 3/4	7/8- 9 NC	3 15/16	12 18 24 30 36	4,400	61 65 76 81 87
	60 MM	*ZNT85060MM*	*304.80* *457.20* *609.60* *762.00* *914.40*	*111.13*	*723.90* *876.30* *1028.70* *1181.10* *1333.50*	-	*774.70* *927.10* *1079.50* *1231.90* *1384.30*	*111.13*	*88.90*	*19.05*	*44.45*	*76.20*	*209.55*	*231.78*	*33.34*	*704.85* *857.25* *1009.65* *1162.05* *1314.45*	*7/8-* *9NC*		*304.80* *457.20* *609.60* *762.00* *914.40*	*19751.20*	*276.64* *294.78* *344.66* *367.34* *394.55*
	65 MM	*ZNT85065MM*																			
4-Bolt																					
9	2 1/2	ZNT95208	12 18 24 30 36	5 1/8	30 1/2 36 1/2 42 1/2 48 1/2 54 1/2	2	32 1/2 38 1/2 44 1/2 50 1/2 56 1/2	4 7/8	4 1/2	3/4	2	4	9 1/4	10 5/8	1 9/16	30 36 42 48 54	1- 8 NC	5 1/16	12 18 24 30 36	6,800	87 95 115 122 130
	2 11/16	ZNT95211																			
	2 15/16	ZNT95215																			

Continued...

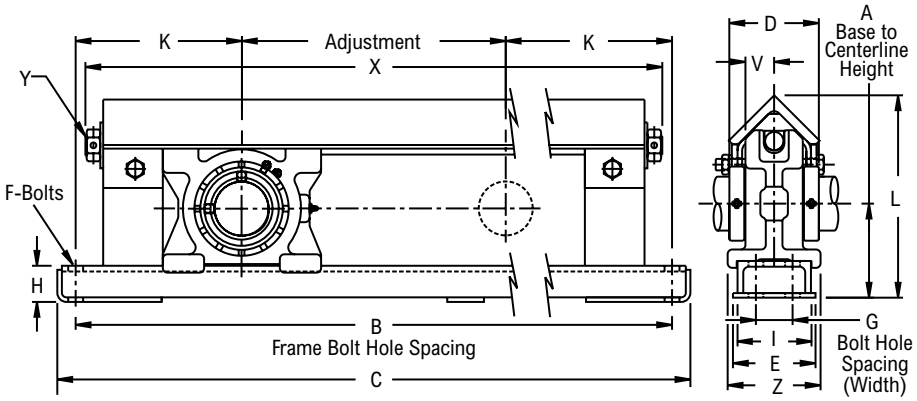

Continued...

Bearing Dimensions

Size Code	Shaft Diameter	Complete Take-up Assembly	Travel Length	A Base to Centerline Height	B Frame Bolt Hole Spacing	G Bolt Hole Spacing (Width)	C	D	E	F	H	I	K	L	V	X	Y	Z	Adjust.	Allowable Working Load	Approx. Weight
4-Bolt (continued)																					
9	*70 MM*	*ZNT95070MM*	*304.80* *457.20* *609.60* *762.00* *914.40*	*130.18*	*774.70* *927.10* *1079.50* *1231.90* *1384.30*	*50.80*	*825.50* *977.90* *1130.30* *1282.70* *1435.10*	*123.83*	*114.30*	*19.05*	*50.80*	*101.60*	*234.95*	*269.88*	*39.69*	*762.00* *914.40* *1066.80* *1219.20* *1371.60*	*1-8NC*		*304.80* *457.20* *609.60* *762.00* *914.40*	*30246.40*	*394.55* *430.83* *521.53* *553.27* *589.55*
	75 MM	*ZNT95075MM*																			
10	3 3/16	ZNT105303	12 18 24 30 36	5 5/8	32 38 44 50 56	2	34 1/4 40 1/4 46 1/4 52 1/4 58 1/4	5 5/16	4 1/2	3/4	2	4	10	11 3/4	1 23/32	32 38 44 50 56	1 1/8- 7 NC	5 3/16	12 18 24 30 36	8,400	120 129 147 156 168
	3 7/16	ZNT105307																			
	80 MM	*ZNT105080MM*	*304.80* *457.20* *609.60* *762.00* *914.40*	*142.88*	*812.80* *965.20* *1117.60* *1270.00* *1422.40*	*50.80*	*869.95* *1022.35* *1174.75* *1327.15* *1479.55*	*134.94*	*114.30*	*19.05*	*50.80*	*101.06*	*254.00*	*298.45*	*43.66*	*812.80* *965.20* *1117.60* *1270.00* *1422.40*	*1 1/8-* *7NC*		*304.80* *457.20* *609.60* *762.00* *914.40*	*37363.20*	*544.20* *585.02* *666.65* *707.46* *761.88*
	85 MM	*ZNT105085MM*																			
	90 MM	*ZNT105090MM*																			
11	3 11/16	ZNT115311	12 18 24 30 36	7	36 42 48 54 60	2 1/2	38 1/2 44 1/2 50 1/2 56 1/2 62 1/2	6 1/4	5 1/2	3/4	2 1/4	5	12	14 1/2	2 1/16	36 5/16 42 5/16 48 5/16 54 5/16 60 5/16	1 1/4- 7 NC	6 3/8	12 18 24 30 36	15,600	211 219 251 271 281
	3 15/16	ZNT115315																			
	4	ZNT115400																			
	100 MM	*ZNT115100MM*	*304.80* *457.20* *609.60* *762.00* *914.40*	*177.80*	*914.40* *1066.80* *1219.20* *1371.60* *1524.00*	*63.50*	*977.90* *1130.30* *1282.70* *1435.10* *1587.50*	*158.75*	*139.70*	*19.05*	*57.15*	*127.00*	*304.80*	*368.30*	*52.39*	*922.35* *1074.75* *1227.15* *1379.55* *1531.95*	*1 1/4-* *7NC*		*304.80* *457.20* *609.60* *762.00* *914.40*	*69388.80*	*956.89* *993.17* *1138.29* *1228.99* *1274.34*

Additional Notes

Please call 1-866-REXNORD for availability
Metric bore sizes available, see Rex Interchangeability guide
Lubrication fitting tap size, 1/8" PT
Bore size = nominal shaft size +.001 in/-.000 in *(+0.03 mm/-0.00 mm)*
Seals - To specify G, K or M seal, replace "Z" in part number with "G", "K" or "M"
Auxiliary end caps - available in all size codes
Allowable working load is 2/3 yield strength

For the Selection Guide, Load Ratings and Speed Limits, see the Spherical Roller Bearings Engineering section on pages 15 - 27.

Note: Dimensions subject to change. Certified dimensions of ordered material furnished on request.

ZNT6000

Photo Shows a Protected Screw Type Take-up Frame with Spherical Roller Bearing Take-up Unit

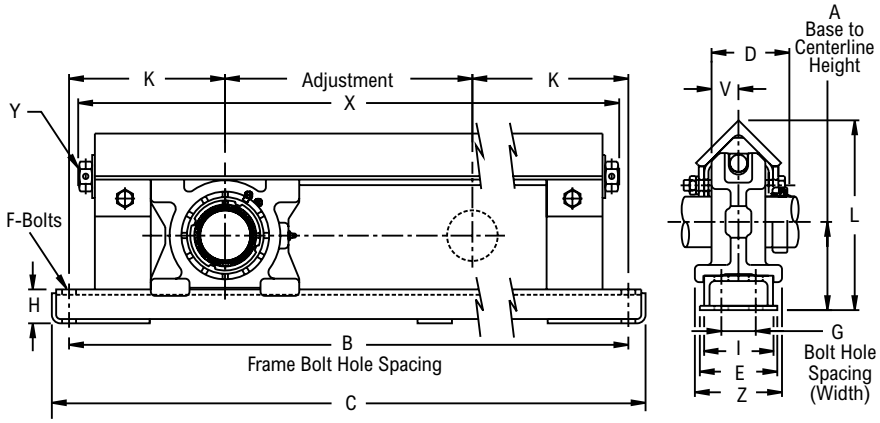

Product Features

- Spyglass Optical Strain Sensor (OSS) Technology
- Positive locking system
- Tapered adapter sleeve
- Protected screw type frame
- Corrosion-resistant powder coating
- Cast iron housing
- Misalignment capabilities - total of 3°
- Broad range of sealing options
- Factory set clearance & lubrication
- See Features and Benefits for additional info on pages 10 - 13.

Bearing Dimensions

Size Code	Shaft Diameter	Complete Take-up Assembly	Travel Length	A Base to Centerline Height	B Frame Bolt Hole Spacing	G Bolt Hole Spacing (Width)	C	D	E	F	H	I	K	L	V	X	Y	Z	Adjust.	Allowable Working Load	Approx. Weight
2-Bolt																					
6	1 15/16	ZNT66115	12 18 24 30 36	3 15/16	26 1/2 32 1/2 38 1/2 44 1/2 50 1/2	-	28 1/2 34 1/2 40 1/2 46 1/2 52 1/2	3 41/64	3 1/2	5/8	1 3/4	3	7 1/4	8 1/4	1 7/32	25 3/8 31 3/8 37 3/8 43 3/8 49 3/8	3/4- 10 NC	3 13/16	12 18 24 30 36	3,000	47 52 58 65 72
	45 MM	*ZNT66045MM*	*304.80* *457.20* *609.60* *762.00* *914.40*	*100.01*	*673.10* *825.50* *977.90* *1130.30* *1282.70*	-	*723.90* *876.30* *1028.70* *1181.10* *1333.50*	*92.47*	*88.90*	*15.88*	*44.45*	*76.20*	*184.15*	*209.55*	*30.96*	*644.53* *796.93* *949.33* *1101.73* *1254.13*	*3/4-* *10NC*		*304.80* *457.20* *609.60* *762.00* *914.40*	*13,344.00*	*204.08* *226.75* *253.96* *285.71* *317.45*
7	2 3/16	ZNT76203	12 18 24 30 36	4 3/16	27 1/2 33 1/2 39 1/2 45 1/2 51 1/2	-	29 1/2 35 1/2 41 1/2 47 1/2 53 1/2	3 49/64	3 1/2	5/8	1 3/4	3	7 3/4	8 11/16	1 9/32	26 3/8 32 3/8 38 3/8 44 3/8 50 3/8	3/4- 10 NC	3 13/16	12 18 24 30 36	3,600	51 56 68 75 80
	55 MM	*ZNT76055MM*	*304.80* *457.20* *609.60* *762.00* *914.40*	*106.36*	*698.50* *850.90* *1003.30* *1155.70* *1308.10*	-	*749.30* *901.70* *1054.10* *1206.50* *1358.90*	*95.65*	*88.90*	*15.88*	*44.45*	*76.20*	*196.85*	*220.66*	*32.54*	*669.93* *822.33* *974.73* *1127.13* *1279.53*	*3/4-* *10NC*		*304.80* *457.20* *609.60* *762.00* *914.40*	*16,012.80*	*231.29* *253.96* *308.38* *340.13* *362.80*
8	2 3/8	ZNT86206	12 18 24 30 36	4 3/8	28 1/2 34 1/2 40 1/2 46 1/2 52 1/2	-	30 1/2 36 1/2 42 1/2 48 1/2 54 1/2	4 5/32	3 1/2	3/4	1 3/4	3	8 1/4	9 1/8	1 5/16	27 3/4 33 3/4 39 3/4 45 3/4 51 3/4	7/8- 9 NC	3 15/16	12 18 24 30 36	4,400	61 65 76 81 87
	2 7/16	ZNT86207																			
	60 MM	*ZNT86060MM*	*304.80* *457.20* *609.60* *762.00* *914.40*	*111.13*	*723.90* *876.30* *1028.70* *1181.10* *1333.50*	-	*774.70* *927.10* *1079.50* *1231.90* *1384.30*	*105.57*	*88.90*	*19.05*	*44.45*	*76.20*	*209.55*	*231.78*	*33.34*	*704.85* *857.25* *1009.65* *1162.05* *1314.45*	*7/8-* *9NC*		*304.80* *457.20* *609.60* *762.00* *914.40*	*19,751.20*	*276.64* *294.78* *344.66* *367.34* *394.55*
4-Bolt																					
9	2 11/16	ZNT96211	12 18 24 30 36	5 1/8	30 1/2 36 1/2 42 1/2 48 1/2 54 1/2	2	32 1/2 38 1/2 44 1/2 50 1/2 56 1/2	4 17/32	4 1/2	3/4	2	4	9 1/4	10 5/8	1 9/16	30 36 42 48 54	1- 8 NC	5 1/16	12 18 24 30 36	6,800	87 95 115 122 130
	2 3/4	ZNT96212																			
	2 15/16	ZNT96215																			

Continued...

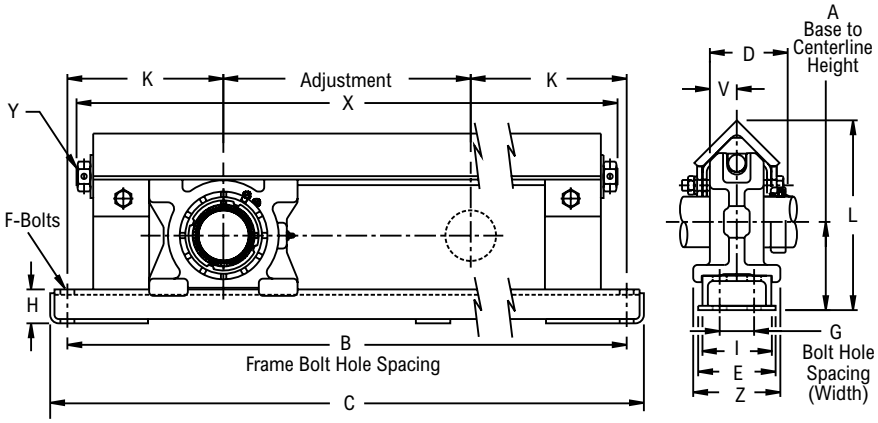

Continued...

Bearing Dimensions

Size Code	Shaft Diameter	Complete Take-up Assembly	Travel Length	A Base to Centerline Height	B Frame Bolt Hole Spacing	G Bolt Hole Spacing (Width)	C	D	E	F	H	I	K	L	V	X	Y	Z	Adjust.	Allowable Working Load	Approx. Weight
4-Bolt (continued)																					
9	*70 MM*	*ZNT96070MM*	*304.80* *457.20* *609.60* *762.00* *914.40*	*130.18*	*774.70* *927.10* *1079.50* *1231.90* *1384.30*	*50.80*	*825.50* *977.90* *1130.30* *1282.70* *1435.10*	*115.09*	*114.30*	*19.05*	*50.80*	*101.60*	*234.95*	*269.88*	*39.69*	*762.00* *914.40* *1066.80* *1219.20* *1371.60*	*1-8NC*		*304.80* *457.20* *609.60* *762.00* *914.40*	*30,246.40*	*394.55* *430.83* *521.53* *553.27* *589.55*
	75 MM	*ZNT95075MM*																			
10	3 3/16	ZNT106303	12 18 24 30 36	5 5/8	32 38 44 50 56	2	34 1/4 40 1/4 46 1/4 52 1/4 58 1/4	5 9/64	4 1/2	3/4	2	4	10	11 3/4	1 23/32	32 38 44 50 56	1 1/8- 7 NC	5 3/16	12 18 24 30 36	8,400	120 129 147 156 168
	3 7/16	ZNT106307																			
	80 MM	*ZNT106080MM*	*304.80* *457.20* *609.60* *762.00* *914.40*	*142.88*	*812.80* *965.20* *1117.60* *1270.00* *1422.40*	*50.80*	*869.95* *1022.35* *1174.75* *1327.15* *1479.55*	*130.57*	*114.30*	*19.05*	*50.80*	*101.06*	*254.00*	*298.45*	*43.66*	*812.80* *965.20* *1117.60* *1270.00* *1422.40*	*1 1/8-* *7NC*		*304.80* *457.20* *609.60* *762.00* *914.40*	*37,363.20*	*544.20* *585.02* *666.65* *707.46* *761.88*
	85 MM	*ZNT106085MM*																			
11	3 11/16	ZNT116311	12 18 24 30 36	7	36 42 48 54 60	2 1/2	38 1/2 44 1/2 50 1/2 56 1/2 62 1/2	5 31/32	5 1/2	3/4	2 1/4	5	12	14 1/2	2 1/16	36 5/16 42 5/16 48 5/16 54 5/16 60 5/16	1 1/4- 7 NC	6 3/8	12 18 24 30 36	15,600	211 219 251 271 281
	3 15/16	ZNT116315																			
	90 MM	*ZNT116090MM*	*304.80* *457.20* *609.60* *762.00* *914.40*	*177.80*	*914.40* *1066.80* *1219.20* *1371.60* *1524.00*	*63.50*	*977.90* *1130.30* *1282.70* *1435.10* *1587.50*	*151.61*	*139.70*	*19.05*	*57.15*	*127.00*	*304.80*	*368.30*	*52.39*	*922.35* *1074.75* *1227.15* *1379.55* *1531.95*	*1 1/4-* *7NC*		*304.80* *457.20* *609.60* *762.00* *914.40*	*69,388.80*	*956.89* *993.17* *1138.29* *1228.99* *1274.34*
	100 MM	*ZNT116100MM*																			

Additional Notes

Please call 1-866-REXNORD for availability
Lubrication fitting tap size, 1/8" PT
Bore size = nominal shaft size +.001 in/-.000 in *(+0.03 mm/-0.00 mm)*
Seals - To specify G, K or M seal, replace "Z" in part number with "G", "K" or "M"
Auxiliary end caps - available in all size codes
Allowable working load is 2/3 yield strength
For the Selection Guide, Load Ratings and Speed Limits, see the Spherical Roller Bearings Engineering section on pages 15 - 27.

Note: Dimensions subject to change. Certified dimensions of ordered material furnished on request.

ZAT2000

Photo Shows a Center Pull, Side Mounted Take-up Frame with Spherical Roller Bearing Take-up Unit

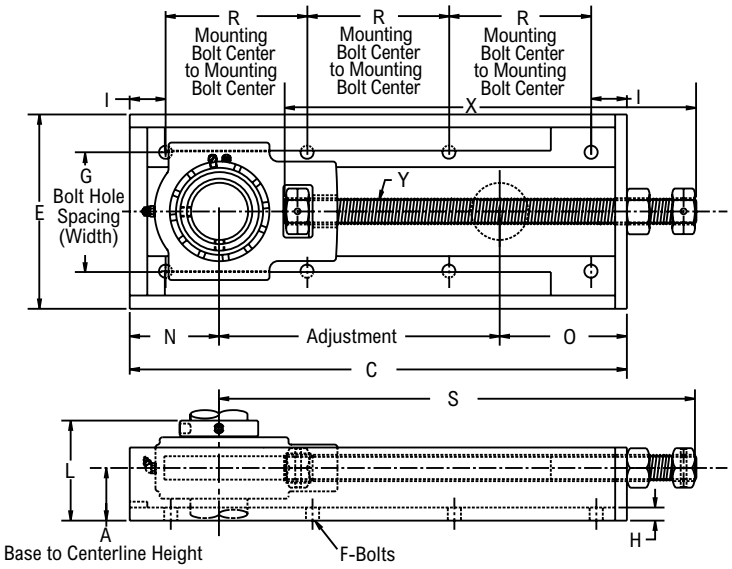

Product Features

- Center pull side mounted frame
- Corrosion-resistant powder coating
- Cast iron housing
- Misalignment capabilities - total of 3°
- Broad range of sealing options
- Factory set clearance & lubrication
- Precision ground & superfinished raceways
- Field interchangeable seals
- See Features and Benefits for additional info on pages 10 - 13.

Bearing Dimensions

Size Code	Shaft Diameter	Part Number	Adjust.	A Base to Centerline Height	G Bolt Hole Spacing (Width)	R Mounting Bolt Center to Mounting Bolt Center	C	E	F	H	I	L	N	O	S	X	Y	Approx. Weight
6-Bolt																		
4	1 7/16	ZAT421079	9	1 7/8	3 9/16	6 7/16	15 7/8	5 3/16	1/2	3/16	1 1/2	3 5/8	3	3 7/8	15	13 1/8	3/4-10 NC	18.40
	35.00	*ZAT42035MM9*	*228.60*	*47.63*	*90.49*	*163.51*	*403.23*	*131.76*	*13.00*	*4.75*	*38.10*	*92.08*	*76.20*	*98.43*	*381.00*	*333.38*	*3/4-10 NC*	*8.30*
5	1 11/16	ZAT521119	9	2	4 1/16	7	17	5 13/16	1/2	1/4	1 1/2	3 7/8	3 1/4	4 3/4	16	13 1/2	7/8-9 NC	26.80
	40.00	*ZAT52040MM9*	*228.60*	*50.80*	*103.19*	*177.80*	*431.80*	*147.64*	*13.00*	*6.35*	*38.10*	*98.43*	*82.55*	*120.65*	*406.40*	*342.90*	*7/8-9 NC*	*12.20*
	45.00	*ZAT52045MM9*																
6	1 15/16	ZAT621159	9	2	4 1/16	7	17	5 13/16	1/2	1/4	1 1/2	3 7/8	3 1/4	4 3/4	16	13 1/2	7/8-9 NC	27.10
	50.00	*ZAT62050MM9*	*228.60*	*50.80*	*103.19*	*177.80*	*431.80*	*147.64*	*13.00*	*6.35*	*38.10*	*98.43*	*82.55*	*120.65*	*406.40*	*342.90*	*7/8-9 NC*	*12.30*
7	2 3/16	ZAT722039	9	2	4 13/16	7 1/2	18	6 9/16	1/2	1/4	1 1/2	4	3 9/16	5 7/16	16 15/16	14 5/16	1-8 NC	33.70
	55.00	*ZAT72055MM9*	*228.60*	*50.80*	*122.24*	*190.50*	*457.20*	*166.69*	*13.00*	*6.35*	*38.10*	*101.60*	*90.49*	*138.11*	*176.21*	*363.54*	*1-8 NC*	*15.30*
8-Bolt																		
8	2 7/16	ZAT8220712	12	2 1/4	5 1/16	6 1/16	21 11/16	7 5/16	1/2	5/16	1 3/4	4 7/16	3 13/16	5 7/8	20 3/4	18	1 1/8-7 NC	51.00
	60.00	*ZAT82060MM12*	*304.80*	*57.15*	*128.59*	*153.99*	*550.86*	*185.74*	*13.00*	*7.94*	*44.45*	*112.71*	*96.84*	*149.23*	*527.05*	*457.20*	*1 1/8-7 NC*	*23.20*
	65.00	*ZAT82065MM12*																
9	2 15/16	ZAT9221512	12	2 7/16	5 3/8	6 1/2	23	8 1/8	1/2	5/16	1 3/4	4 7/8	4 1/4	6 3/4	21 3/4	18 1/2	1 1/4-7 NC	75.00
	70.00	*ZAT92070MM12*	*304.80*	*61.91*	*136.53*	*165.10*	*584.20*	*206.38*	*13.00*	*7.94*	*44.45*	*123.83*	*107.95*	*171.45*	*552.45*	*469.90*	*1 1/4-7 NC*	*34.00*
	75.00	*ZAT92075MM12*																

Additional Notes

- Please call 1-866-REXNORD for availability
- Metric bore sizes available, see Rex Interchangeability guide
- Lubrication fitting tap size, 1/8" PT
- Bore size = nominal shaft size +.001 in/-.000 in *(+0.03 mm/-0.00 mm)*
- Seals - To specify G, K or M seal, replace "Z" in part number with "G", "K" or "M"
- Auxiliary end caps - available in all size codes on outboard side only
- For the Selection Guide, Load Ratings and Speed Limits, see the Spherical Roller Bearings Engineering section on pages 15 - 27.

Note: Dimensions subject to change. Certified dimensions of ordered material furnished on request.

ZAT3000

Photo Shows a Center Pull, Side Mounted Take-up Frame with Spherical Roller Bearing Take-up Unit

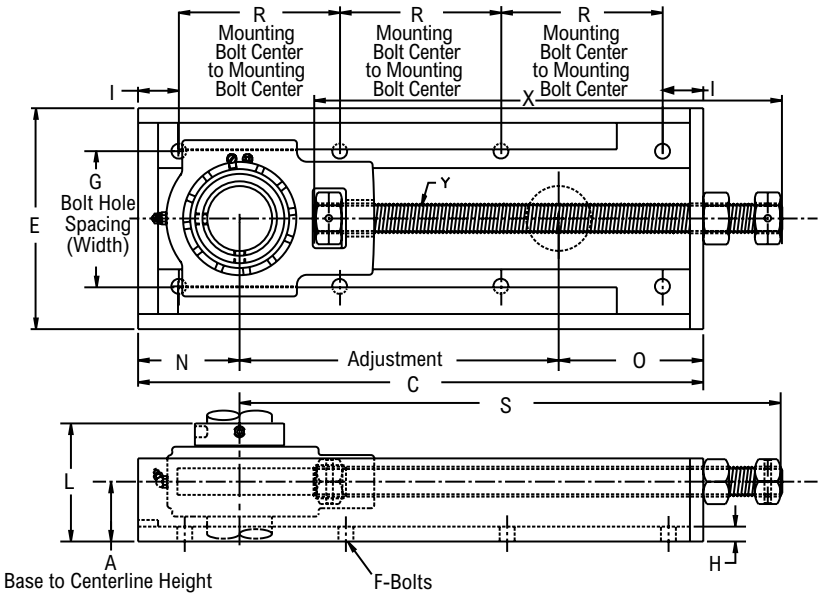

Product Features

- Center pull side mounted frame
- Corrosion-resistant powder coating
- Cast iron housing
- Misalignment capabilities - total of 3°
- Broad range of sealing options
- Factory set clearance & lubrication
- Precision ground & superfinished raceways
- Field interchangeable seals
- See Features and Benefits for additional info on pages 10 - 13.

Bearing Dimensions

Size Code	Shaft Diameter	Part Number	Adjust.	A Base to Centerline Height	G Bolt Hole Spacing (Width)	R Mounting Bolt Center to Mounting Bolt Center	C	E	F	H	I	L	N	O	S	X	Y	Approx. Weight
6-Bolt																		
4	1 7/16	ZAT431079	9	1 7/8	3 9/16	6 7/16	15 7/8	5 3/16	1/2	3/16	1 1/2	3 5/8	3	3 7/8	15	13 1/8	3/4-10 NC	18.40
5	1 11/16	ZAT531119	9	2	4 1/16	7	17	5 13/16	1/2	1/4	1 1/2	3 7/8	3 1/4	4 3/4	16	13 1/2	7/8-9 NC	26.80
6	1 15/16	ZAT631159	9	2	4 1/16	7	17	5 13/16	1/2	1/4	1 1/2	3 7/8	3 1/4	4 3/4	16	13 1/2	7/8-9 NC	27.10
7	2 3/16	ZAT732039	9	2	4 13/16	7 1/2	18	6 9/16	1/2	1/4	1 1/2	4	3 9/16	5 7/16	16 15/16	14 5/16	1-8 NC	33.70
8-Bolt																		
8	2 7/16	ZAT8320712	12	2 1/4	5 1/16	6 1/16	21 11/16	7 5/16	1/2	5/16	1 3/4	4 7/16	3 13/16	5 7/8	20 3/4	18	1 1/8-7 NC	51.00
9	2 15/16	ZAT9321512	12	2 7/16	5 3/8	6 1/2	23	8 1/8	1/2	5/16	1 3/4	4 7/8	4 1/4	6 3/4	21 3/4	18 1/2	1 1/4-7 NC	75.00

Additional Notes

- Please call 1-866-REXNORD for availability
- Lubrication fitting tap size, 1/8" PT
- Bore size = nominal shaft size +.001 in/-.000 in *(+0.03 mm/-0.00 mm)*
- Seals - To specify G, K or M seal, replace "Z" in part number with "G", "K" or "M"
- Auxiliary end caps - available in all size codes on outboard side only
- For the Selection Guide, Load Ratings and Speed Limits, see the Spherical Roller Bearings Engineering section on pages 15 - 27.

Note: Dimensions subject to change. Certified dimensions of ordered material furnished on request.

ZFT5000

Photo Shows an Elevator Boot Take-up Frame with Spherical Roller Bearing Take-up Unit

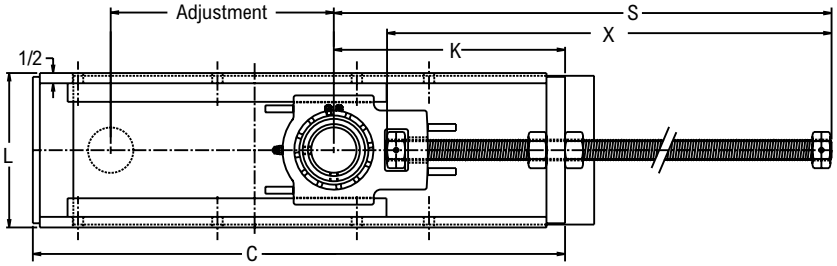

Product Features

- Center pull elevator boot frame
- Back plate makes casing dust tight
- Corrosion-resistant powder coating
- Cast iron housing
- Misalignment capabilities - total of 3°
- Broad range of sealing options
- Factory set clearance & lubrication
- Precision ground & superfinished raceways
- Field interchangeable seals
- See Features and Benefits for additional info on pages 10 - 13.

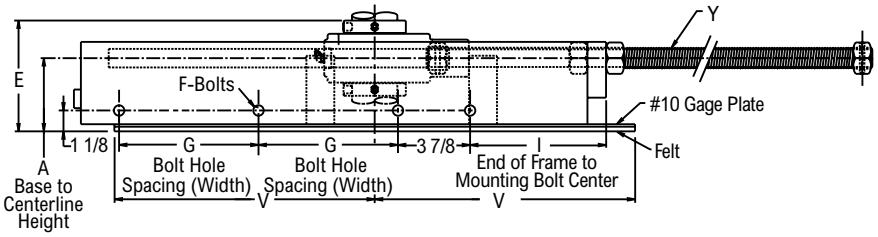

Bearing Dimensions

Size Code	Shaft Diameter	Part Number	A Base to Centerline Height	G Bolt Hole Spacing (Width)	I End of Frame at Rod End to Mounting Bolt Center	C	E	F	K	L	S	V	X	Y	Adjust.	Approx. Weight
6	1 15/16	ZFT651159	3 11/16	6	5 1/2	23 1/2	5 5/8	1/2	10 5/8	7 3/16	21 3/4	11	19 1/2	7/8-9 NC	9	63.00
	50.00	*ZFT65050MM9*	*93.66*	*152.40*	*139.70*	*596.90*	*142.88*	*13.00*	*269.88*	*182.56*	*21.75*	*279.40*	*495.30*	*7/8-9 NC*	*228.60*	*28.60*
8	2 7/16	ZFT8520712	3 15/16	7 1/2	7 5/16	28 5/8	6 1/8	1/2	12 7/16	8 5/16	27	14	24 1/4	1 1/8-7 NC	12	88.00
	60.00	*ZFT85060MM12*	*100.01*	*190.50*	*185.74*	*727.08*	*155.58*	*13.00*	*315.91*	*211.14*	*685.80*	*355.60*	*615.95*	*1 1/8-7 NC*	*304.80*	*40.00*
	65.00	*ZFT85065MM12*														
9	2 1/2	ZFT9520812	4 3/8	7 1/2	8 3/4	30 3/8	6 13/16	1/2	13 7/8	8 5/8	28 5/8	14	25 3/8	1 1/4-7 NC	12	117.00
	2 11/16	ZFT9521112														115.00
	2 15/16	ZFT9521512														114.00
	70.00	*ZFT95070MM12*	*111.13*	*190.50*	*222.25*	*771.53*	*173.04*	*13.00*	*352.43*	*219.08*	*727.08*	*355.60*	*593.73*	*1 1/8-7 NC*	*304.80*	*52.10*
	75.00	*ZFT95075MM12*														*51.80*

Additional Notes

- Please call 1-866-REXNORD for availability
- Metric bore sizes available, see Rex Interchangeability guide
- Lubrication fitting tap size, 1/8" PT
- Bore size = nominal shaft size +.001 in/-.000 in *(+0.03 mm/-0.00 mm)*
- Seals - To specify G, K or M seal, replace "Z" in part number with "G", "K" or "M"
- Auxiliary end caps - available in all size codes
- For the Selection Guide, Load Ratings and Speed Limits, see the Spherical Roller Bearings Engineering section on pages 15 - 27.

Note: Dimensions subject to change. Certified dimensions of ordered material furnished on request.

ZGT5000

Photo Shows an Elevator Head Take-up Frame with Spherical Roller Bearing Take-up Unit

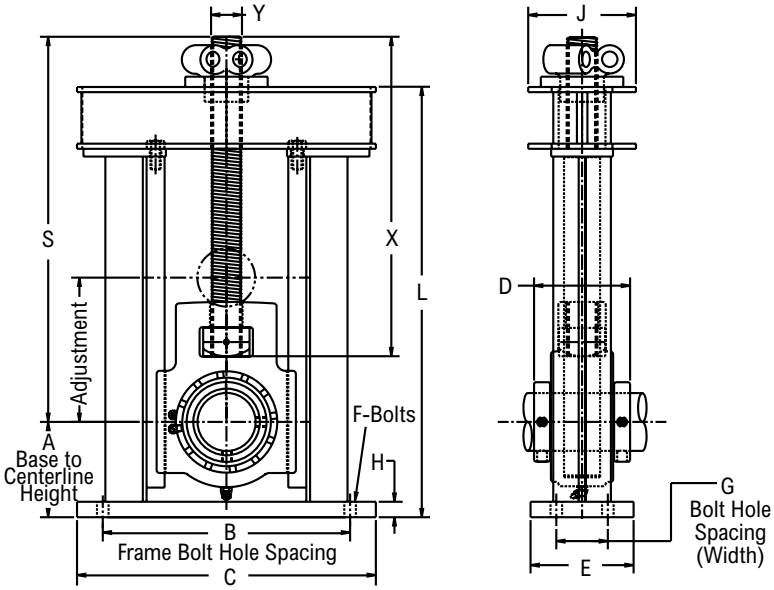

Product Features

- Center pull elevator head frame
- Corrosion-resistant powder coating
- Cast iron housing
- Misalignment capabilities - total of 3°
- Broad range of sealing options
- Factory set clearance & lubrication
- Precision ground & superfinished raceways
- Field interchangeable seals
- See Features and Benefits for additional info on pages 10 - 13.

Bearing Dimensions

Size Code	Shaft Diameter	Part Number	A Base to Centerline Height	B Frame Bolt Hole Spacing	G Bolt Hole Spacing (Width)	C	D	E	F	H	J	L	S	X	Y	Adjust.	Allowable Working Load	Approx. Weight
6	1 15/16	ZGT651156	3 5/16	10	1 3/4	12	3 13/16	3 1/2	1/2	1/2	4 15/16	16 1/2	15 7/8	13 5/8	1-8 NC	6	12,300	50.00
	50.00	ZGT65050MM6	84.14	254.00	44.45	304.80	96.84	88.90	13.00	12.70	125.41	419.10	403.23	346.08	1-8 NC	152.40	5,580	22.70
8	2 7/16	ZGT852077	4 1/8	11	2	13 1/2	4 3/8	4	5/8	3/4	4 15/16	19 7/16	18 3/4	13 5/8	1 1/4-7 NC	7	20,900	74.00
	60.00	ZGT85060MM7	104.78	279.40	50.80	342.90	111.13	101.60	16.00	19.05	125.41	493.70	476.25	346.08	1 1/4-7 NC	177.80	9,480	33.50
	65.00	ZGT85065MM7																
9	2 1/2	ZGT952087	4 5/8	12	2 1/2	14 1/2	4 7/8	5	5/8	3/4	5 1/4	20 7/8	17 7/8	15 1/2	1 1/2-6 NC	7	26,800	103.00
	2 11/16	ZGT952117																101.00
	2 15/16	ZGT952157																100.00
	70.00	ZGT95070MM7	117.48	304.80	63.50	368.30	123.83	127.00	16.00	19.05	133.35	530.23	454.03	393.70	1 1/2-6 NC	177.80	12,100	45.80
	75.00	ZGT95075MM7																44.80
10	3 3/16	ZGT10530310	5 1/8	13	3	16	5 5/16	5	3/4	3/4	6	25 1/16	23 3/16	19 1/2	1 3/4-5 NC	10	27,300	140.00
	3 7/16	ZGT10530710																138.00
	80.00	ZGT105080MM10	130.18	330.20	76.20	406.40	134.94	127.00	19.00	19.05	152.40	636.59	588.96	495.30	1 3/4-5 NC	254.00	12,400	64.00
	85.00	ZGT105085MM10																63.50
	90.00	ZGT105090MM10																63.00
11	3 11/16	ZGT11531110	5 13/16	14	3	17	6 1/8	5	3/4	3/4	8 1/4	27 3/4	26 7/16	22	2-4 1/2 NC	10	45,400	214.00
	3 15/16	ZGT11531510																211.00
	4	ZGT11540010																210.00
	100.00	ZGT115100MM10	147.64	355.60	76.20	431.80	155.58	127.00	19.00	19.05	209.55	704.85	671.51	558.80	1 3/4-5 NC	254.00	20,600	96.00
12	4 7/16	ZGT125407Y10	6 13/16	17	3 1/2	20	6 1/4	6	7/8	3/4	9 1/4	32 1/4	29 1/2	24 1/2	2-4 1/2 NC	10 1/2	53,700	260.00
	110.00	ZGT125110MM10	173.16	431.80	88.90	508.00	158.75	152.40	22.00	19.05	234.95	819.15	749.30	622.30	2-4 1/2 NC	266.70	24,300	118.00
	115.00	ZGT125115MM10																117.00
13	4 15/16	ZGT13541510	7 3/16	18	3 1/2	21	7 7/8	6	7/8	3/4	9 7/16	34 5/8	31 3/4	26 5/16	2 1/4-4 1/2 NC	10 1/2	68,000	329.00
	5	ZGT13550010																326.00
	125.00	ZGT135125MM10	182.56	457.20	88.90	533.40	200.03	152.40	22.00	19.05	239.71	879.48	806.45	668.34	2-4 1/2 NC	266.70	30,800	149.00
	130.00	ZGT135130MM10																148.00
14	5 7/16	ZGT14550710	9 11/16	23	7	31	8	10	1 1/8	1	10 1/2	44 7/8	42 1/4	35	3-4 NC	10 1/2	125,000	1,200.00
	140.00	ZGT145140MM10	246.06	584.20	177.80	787.40	203.20	254.00	28.00	25.40	266.70	1,139.83	1,073.15	889.00	2 1/4-4 1/2 NC	266.70	56,200	545.00
15	5 15/16	ZGT15551510	9 11/16	23	7	31	8 1/8	10	1 1/8	1	10 1/2	44 7/8	42 1/4	35	3-4 NC	10 1/2	125,000	1,200.00
	6	ZGT15560010																
	150.00	ZGT155150MM10	246.06	584.20	177.80	787.40	206.38	254.00	28.00	25.40	266.70	1,139.83	1,073.15	889.00	3-4 NC	266.70	56,200	545.00
	160.00	ZGT155160MM10																
16	6 7/16	ZGT16560710	9 11/16	23	7	31	8 3/4	10	1 1/8	1	10 1/2	44 7/8	42 1/4	35	3-4 NC	10 1/2	125,000	1,200.00
	6 15/16	ZGT16561510																

Continued...

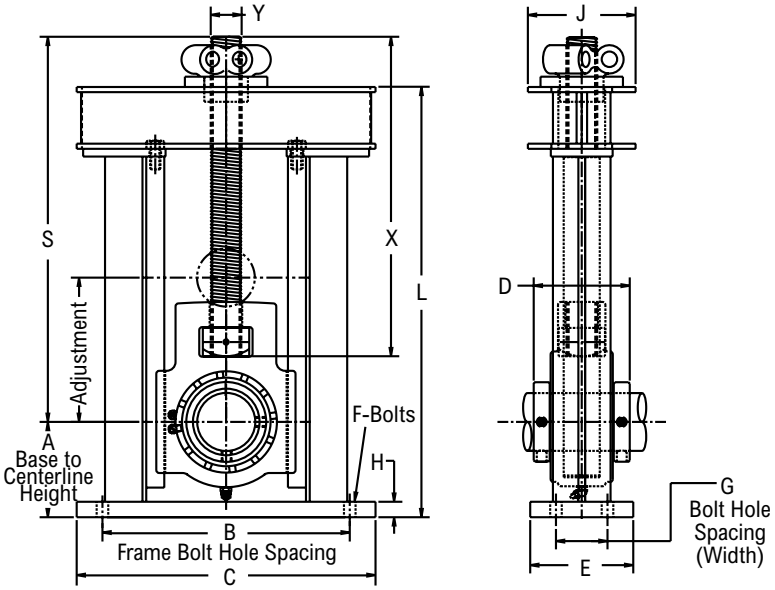

Continued...

Bearing Dimensions

Size	Shaft Diameter	Part Number	A Base to Centerline Height	B Frame Bolt Hole Spacing	G Bolt Hole Spacing (Width)	C	D	E	F	H	J	L	S	X	Y	Adjust.	Allowable Working Load	Approx. Weight
16	7	ZGT16570010	9 11/16	23	7	31	8 3/4	10	1 1/8	1	10 1/2	44 7/8	42 1/4	35	3-4 NC	10 1/2	125,000	1,200.00
	180.00	*ZGT165180MM10*	*246.06*	*584.20*	*177.80*	*787.40*	*222.25*	*254.00*	*28.00*	*25.40*	*266.70*	*1,139.83*	*1,073.15*	*889.00*	*3-4 NC*	*266.70*	*56,200*	*545.00*

Additional Notes

Please call 1-866-REXNORD for availability
Metric bore sizes available, see Rex Interchangeability guide
Lubrication fitting tap size, 1/8" PT
Bore size = nominal shaft size +.001 in/-.000 in *(+0.03 mm/-0.00 mm)*
Seals - To specify G, K or M seal, replace "Z" in part number with "G", "K" or "M"
"G" seals available in size codes 6 thru 13
"K" seals available in size codes 6 thru 11

Auxiliary end caps - available in all size codes
Allowable working load is 2/3 yield strength
For the Selection Guide, Load Ratings and Speed Limits, see the Spherical Roller Bearings Engineering section on pages 15 - 27.
Note: Dimensions subject to change. Certified dimensions of ordered material furnished on request.

ZD2000

Photo Shows a Spherical Roller Bearing Duplex Unit

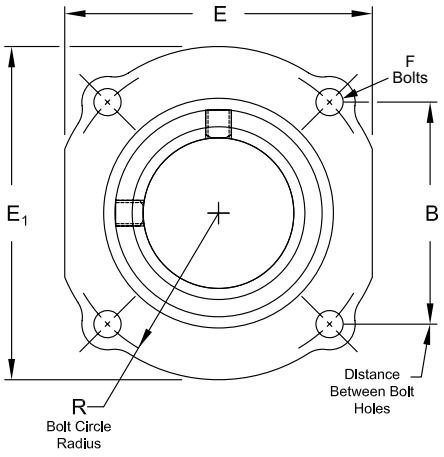

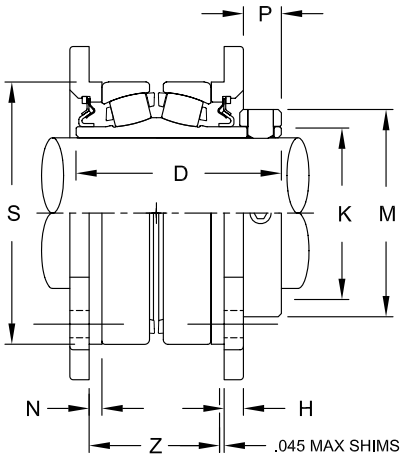

Product Features

- Corrosion-resistant powder coating
- Cast iron housing
- Misalignment capabilities - total of 4°
- Broad range of sealing options
- Factory set clearance & lubrication
- Precision ground & superfinished raceways
- Hardened spring locking collar
- Field interchangeable seals
- See Features and Benefits for additional info on pages 10 - 13.

Bearing Dimensions

Size Code	Shaft Diameter	Part Number	B Distance Between Bolt Holes	R Bolt Circle Radius	D	E1	E	F	H	K	M	N	P	S	Z	Recommended Housing Bore Diameter	Approx. Weight
4	1 7/16	ZD2107	2 9/16	1 13/16	2 7/8	3 3/4	3 5/16	3/8	5/16	1 3/4	2 5/16	7/32	5/8	2.8380	1.725	2.8360	3.00
	1 1/2	ZD2108															2.90
	35.00	*ZD2035MM*	*65.09*	*46.04*	*73.02*	*96.30*	*84.14*	*10.00*	*7.94*	*44.450*	*58.74*	*5.54*	*15.88*	*72.0852*	*43.815*	*72.0344*	*1.40*
5	1 11/16	ZD2111	2 7/8	2 1/32	3 1/8	4 1/4	3 3/4	3/8	5/16	2 1/32	2 19/32	3/16	5/8	3.3500	1.930	3.3480	4.20
	1 3/4	ZD2112															4.00
	40.00	*ZD2040MM*	*73.02*	*15.59*	*79.38*	*107.95*	*95.25*	*10.00*	*7.94*	*26.190*	*65.88*	*5.02*	*15.88*	*85.0900*	*49.022*	*85.0392*	*2.00*
	45.00	*ZD2045MM*															*1.90*
6	1 15/16	ZD2115	3	2 1/8	3 1/8	4 1/2	4	3/8	5/16	2 5/16	2 7/8	3/16	21/32	3.5470	1.875	3.5450	4.60
	2	ZD2200															4.50
	50.00	*ZD2050MM*	*76.20*	*59.98*	*79.38*	*114.30*	*101.60*	*10.00*	*7.94*	*58.740*	*73.03*	*5.02*	*16.66*	*90.0938*	*47.625*	*90.0430*	*2.10*
7	2 3/16	ZD2203	3 13/32	2 13/32	3 5/16	5 1/8	4 9/16	7/16	5/16	2 5/8	3 1/4	1/8	11/16	3.9400	1.880	3.9390	6.20
	2 1/4	ZD2204															6.10
	55.00	*ZD2055MM*	*85.52*	*61.11*	*84.14*	*130.18*	*115.89*	*11.00*	*7.94*	*66.680*	*82.55*	*3.18*	*17.45*	*100.0760*	*47.752*	*86.1822*	*2.80*
8	2 3/8	ZD2206	3 23/32	2 5/8	3 1/2	5 1/2	4 15/16	1/2	5/16	2 29/32	3 9/16	1/4	3/4	4.3340	2.225	4.3320	7.80
	2 7/16	ZD2207															7.70
	2 1/2	ZD2208															7.50
	60.00	*ZD2060MM*	*94.43*	*66.68*	*88.90*	*139.70*	*125.41*	*13.00*	*7.94*	*73.810*	*90.49*	*6.35*	*19.05*	*110.0836*	*56.515*	*110.0328*	*3.50*
	65.00	*ZD2065MM*															*3.30*
9	2 11/16	ZD2211	4 21/64	3 1/16	4	6 1/2	6	1/2	3/8	3 3/8	4 1/16	1/4	3/4	5.1200	2.600	5.1190	13.30
	2 3/4	ZD2212															13.10
	2 15/16	ZD2215															12.10
	3	ZD2300															11.60
	70.00	*ZD2070MM*	*109.93*	*77.79*	*101.60*	*165.10*	*152.40*	*13.00*	*9.53*	*85.730*	*103.19*	*6.35*	*19.05*	*130.0480*	*66.040*	*130.0226*	*6.00*
	75.00	*ZD2075MM*															*5.80*
10	3 3/16	ZD2303	4 61/64	3 1/2	4 3/8	7 3/8	6 13/16	5/8	7/16	3 31/32	4 29/32	3/16	7/8	5.9080	2.664	5.9060	18.70
	3 7/16	ZD2307															17.20
	3 1/2	ZD2308															16.80
	80.00	*ZD2080MM*	*125.80*	*88.90*	*111.13*	*187.33*	*173.04*	*16.00*	*11.11*	*100.810*	*124.62*	*5.02*	*22.23*	*105.0632*	*67.666*	*150.0124*	*18.50*
	85.00	*ZD2085MM*															*18.10*
	90.00	*ZD2090MM*															*17.80*
11	3 11/16	ZD2311	6 3/16	4 3/8	5 1/16	9 1/8	8 5/8	5/8	17/32	4 9/16	5 5/8	15/64	1	7.0890	3.190	7.0880	35.50
	3 15/16	ZD2315															31.20
	4	ZD2400															30.50
	100.00	*ZD2100MM*	*157.16*	*111.13*	*128.59*	*231.78*	*219.08*	*16.00*	*13.49*	*115.890*	*142.88*	*5.94*	*25.40*	*180.0606*	*81.026*	*180.0352*	*14.20*

Additional Notes

Please call 1-866-REXNORD for availability
Metric bore sizes available, see Rex Interchangeability guide
Bore size = nominal shaft size +.001 in/-.000 in *(+0.03 mm/-0.00 mm)*
Outer race O.D. tolerance, +.000"/-.001" *(-0.00 mm/+0.03 mm)*
Recommended housing bore diameter tolerance, +.002"/-.000" *(+0.05 mm/-0.00 mm)*
Seals - To specify G, K or M seal, replace "Z" in part number with "G", "K" or "M"
Auxiliary end caps - not available

For the Selection Guide, Load Ratings and Speed Limits, see the Spherical Roller Bearings Engineering section on pages 15 - 27.
Note: Dimensions subject to change. Certified dimensions of ordered material furnished on request.

ZD5000

Photo Shows a Spherical Roller Bearing Duplex Unit

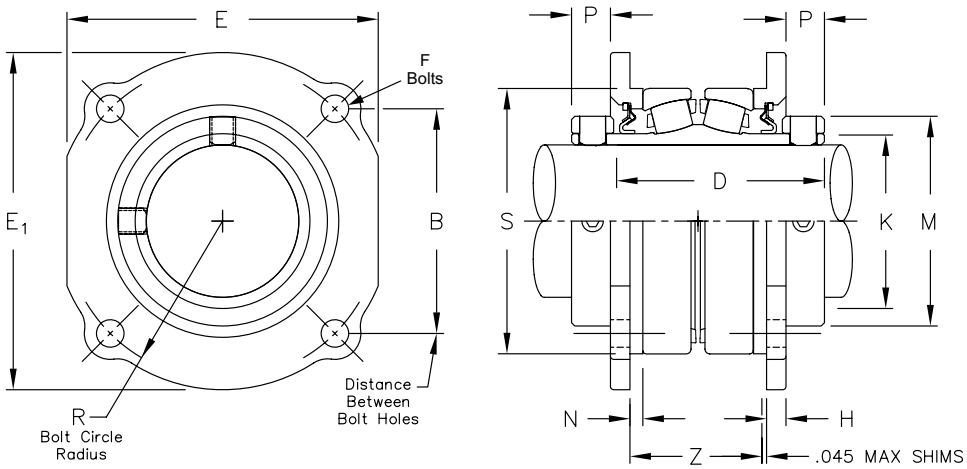

Product Features

- Corrosion-resistant powder coating
- Cast iron housing
- Misalignment capabilities - total of 4°
- Broad range of sealing options
- Factory set clearance & lubrication
- Precision ground & superfinished raceways
- Two hardened spring locking collars
- Field interchangeable seals
- See Features and Benefits for additional info on pages 10 - 13.

Bearing Dimensions

Size Code	Shaft Diameter	Part Number	B Distance Between Bolt Holes	R Bolt Circle Radius	D	E1	E	F Bolts	H	K	M	N	P	S	Z	Recommended Housing Bore Diameter	Approx. Weight
4	1 7/16	ZD5107	2 9/16	1 13/16	3 9/16	3 3/4	3 5/16	3/8	5/16	1 3/4	2 5/16	7/32	5/8	2.8380	1.725	2.8360	3.40
	35.00	*ZD5035MM*	*65.09*	*46.04*	*90.49*	*96.30*	*84.14*	*10.00*	*7.94*	*44.450*	*58.74*	*5.54*	*15.88*	*72.0852*	*43.815*	*72.0344*	*1.50*
5	1 1/2	ZD5108	2 7/8	2 1/32	3 13/16	4 1/4	3 3/4	3/8	5/16	2 1/32	2 19/32	3/16	5/8	3.3500	1.930	3.3480	5.40
	1 11/16	ZD5111															4.80
	40.00	*ZD5040MM*	*73.02*	*15.59*	*96.84*	*107.95*	*95.25*	*10.00*	*7.94*	*26.190*	*65.88*	*5.02*	*15.88*	*85.0900*	*49.022*	*85.0392*	*2.50*
	45.00	*ZD5045MM*															*2.30*
6	1 15/16	ZD5115	3	2 1/8	3 13/16	4 1/2	4	3/8	5/16	2 5/16	2 7/8	3/16	21/32	3.5470	1.875	3.5450	5.20
	50.00	*ZD5050MM*	*76.20*	*59.98*	*96.84*	*114.30*	*101.60*	*10.00*	*7.94*	*58.740*	*73.03*	*5.02*	*16.66*	*90.0938*	*47.625*	*90.0430*	*2.40*
7	2	ZD5200	3 13/32	2 13/32	4 1/8	5 1/8	4 9/16	7/16	5/16	2 5/8	3 1/4	1/8	11/16	3.9400	1.880	3.9390	7.90
	2 3/16	ZD5203															7.30
	55.00	*ZD5055MM*	*85.52*	*61.11*	*104.78*	*130.18*	*115.89*	*11.00*	*7.94*	*2 5/8*	*82.55*	*3.18*	*17.45*	*100.0760*	*47.752*	*86.1822*	*3.30*
8	2 7/16	ZD5207	3 23/32	2 5/8	4 3/8	5 1/2	4 15/16	1/2	5/16	2 29/32	3 9/16	1/4	3/4	4.3340	2.225	4.3320	8.80
	60.00	*ZD5060MM*	*94.43*	*66.68*	*111.13*	*139.70*	*125.41*	*13.00*	*7.94*	*73.810*	*90.49*	*6.35*	*19.05*	*110.0836*	*56.515*	*110.0328*	*4.00*
	65.00	*ZD5065MM*															
9	2 1/2	ZD5208	4 21/64	3 1/16	4 7/8	6 1/2	6	1/2	3/8	3 3/8	4 1/16	1/4	3/4	5.1200	2.600	5.1190	16.60
	2 11/16	ZD5211															15.30
	2 15/16	ZD5215															13.20
	70.00	*ZD5070MM*	*109.93*	*77.79*	*123.83*	*165.10*	*152.40*	*13.00*	*9.53*	*85.730*	*103.19*	*6.35*	*19.05*	*130.0480*	*66.040*	*130.0226*	*7.00*
	75.00	*ZD5075MM*															*6.70*
10	3 3/16	ZD5303	4 61/64	3 1/2	5 5/16	7 3/8	6 13/16	5/8	7/16	3 31/32	4 29/32	3/16	7/8	5.9080	2.664	5.9060	21.20
	3 7/16	ZD5307															19.40
	80.00	*ZD5080MM*	*125.80*	*88.90*	*134.94*	*187.33*	*173.04*	*16.00*	*11.11*	*100.810*	*124.62*	*5.02*	*22.23*	*105.0632*	*67.666*	*150.0124*	*9.60*
	85.00	*ZD5085MM*															*9.40*
	90.00	*ZD5090MM*															*9.10*
11	3 11/16	ZD5311	6 3/16	4 3/8	6 1/8	9 1/8	8 5/8	5/8	17/32	4 9/16	5 5/8	15/64	1	7.0890	3.190	7.0880	38.00
	3 15/16	ZD5315															35.00
	4	ZD5400															34.00
	100.00	*ZD5100MM*	*157.16*	*111.13*	*155.58*	*231.78*	*219.08*	*16.00*	*13.49*	*115.890*	*142.88*	*5.94*	*25.40*	*180.0606*	*81.026*	*180.0352*	*15.90*

Additional Notes

Please call 1-866-REXNORD for availability

Metric bore sizes available, see Rex Interchangeability guide

Bore size = nominal shaft size +.001 in/-.000 in *(+0.03 mm/-0.00 mm)*

Outer race O.D. tolerance, +.000 in/-.001 in *(-0.00 mm/+0.03 mm)*

Recommended housing bore diameter tolerance, +.002 in/-.000 in *(+0.05 mm/-0.00 mm)*

Seals - To specify G, K or M seal, replace "Z" in part number with "G", "K" or "M"

Auxiliary end caps - not available

For the Selection Guide, Load Ratings and Speed Limits, see the Spherical Roller Bearings Engineering section on pages 15 - 27.

Note: Dimensions subject to change. Certified dimensions of ordered material furnished on request.

2000U

Photo Shows an Unmounted Spherical Roller Bearing

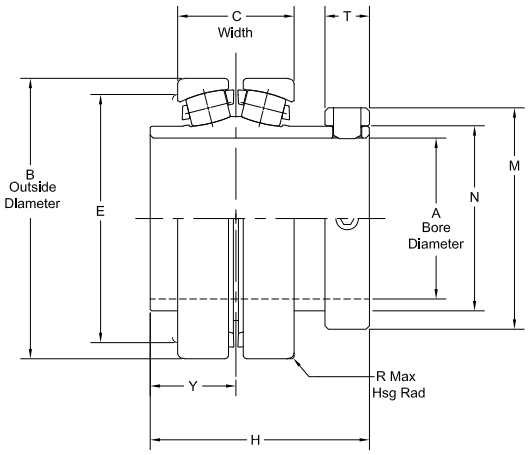

Product Features

Precision ground & superfinished raceways
Hardened spring locking collar
Self aligning
See Features and Benefits for additional info on pages 10 - 13.

Bearing Dimensions

Size Code	Shaft Diameter	Part Number	A Bore Diameter	B Outside Diameter	C Width	E	H	M	N	R Housing Max	T	Y	Approx. Weight
2	3/4	2012U	0.7500	2.3755	1.19	2.00	2.57	1.74	1.31	0.04	0.5	1.00	1.30
	15/16	2015U	0.9375										
	1	2100U	1.0000										
	25.00	*2025MMU*	*25.00*	*60.3377*	*30.1752*	*50.800*	*65.075*	*44.069*	*33.198*	*1.168*	*12.700*	*25.400*	*0.60*
3	1 1/8	2102U	1.1250	2.6255	1.31	2.31	2.69	1.96	1.53	0.05	0.5	1.06	1.80
	1 3/16	2103U	1.1875										
	1 1/4	2104U	1.2500										
	30.00	*2030MMU*	*30.00*	*66.6877*	*33.3248*	*58.750*	*68.275*	*49.784*	*38.913*	*1.575*	*12.700*	*26.975*	*0.80*
4	1 7/16	2107U	1.4375	2.8350	1.31	2.50	2.88	2.30	1.75	0.05	0.63	1.09	2.20
	1 1/2	2108U	1.5000										
	35.00	*2035MMU*	*35.00*	*72.0090*	*33.274*	*63.500*	*73.025*	*58.420*	*44.323*	*1.575*	*15.875*	*27.788*	*1.00*
5	1 11/16	2111U	1.6875	3.3469	1.58	2.88	3.13	2.58	2.03	0.05	0.63	1.22	3.20
	1 3/4	2112U	1.7500										
	40.00	*2040MMU*	*40.00*	*85.0113*	*40.0812*	*73.025*	*79.375*	*65.583*	*51.486*	*1.575*	*15.875*	*30.963*	*1.50*
	45.00	*2045MMU*	*45.00*										
6	1 15/16	2115U	1.9375	3.5438	1.53	3.19	3.13	2.88	2.31	0.05	0.63	1.22	3.30
	2	2200U	2.0000										
	50.00	*2050MMU*	*50.00*	*90.0125*	*38.760*	*80.975*	*79.4385*	*73.025*	*58.598*	*1.981*	*15.875*	*30.963*	*1.50*
7	2 3/16	2203U	2.1875	3.9375	1.66	3.50	3.32	3.25	2.62	0.05	0.75	1.25	4.60
	2 1/4	2204U	2.2500										
	55.00	*2055MMU*	*55.00*	*100.0125*	*42.0624*	*88.900*	*82.1248*	*82.550*	*66.548*	*1.575*	*19.050*	*31.750*	*2.10*
8	2 3/8	2206U	2.3750	4.3312	1.75	3.88	3.51	3.55	2.90	0.05	0.81	1.31	5.80
	2 7/16	2207U	2.4375										
	2 1/2	2208U	2.5000										
	60.00	*2060MMU*	*60.00*	*110.0125*	*44.450*	*98.425*	*88.9000*	*90.246*	*73.685*	*1.981*	*20.676*	*33.325*	*2.60*
	65.00	*2065MMU*	*65.00*										
9	2 11/16	2211U	2.6875	5.1177	2.13	4.53	4.00	4.04	3.37	0.05	0.81	1.56	9.50
	2 3/4	2212U	2.7500										
	2 15/16	2215U	2.9375										
	3	2300U	3.0000										
	70.00	*2070MMU*	*70.00*	*129.9896*	*53.9750*	*115.087*	*101.6000*	*102.667*	*85.598*	*1.981*	*20.676*	*39.726*	*4.30*
	75.00	*2075MMU*	*75.00*										

Continued...

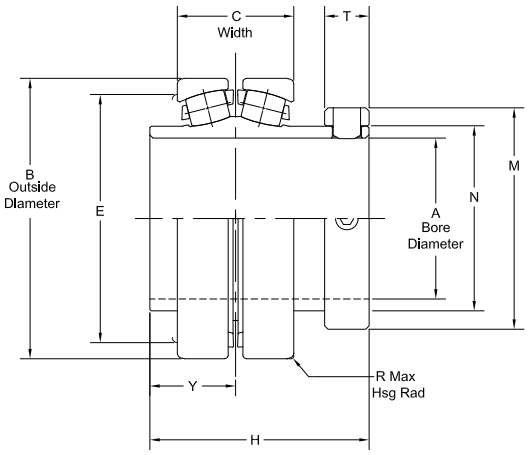

Continued...

Bearing Dimensions

Size Code	Shaft Diameter	Part Number	A Bore Diameter	B Outside Diameter	C Width	E	H	M	N	R Housing Max	T	Y	Approx. Weight
10	3 3/16	2303U	3.1875	5.9050	2.31	5.34	4.39	4.90	3.98	0.05	0.81	1.72	13.50
	3 7/16	2307U	3.4375										
	3 1/2	2308U	3.5000										
	80.00	*2080MMU*	*80.00*	*149.9870*	*58.7502*	*135.738*	*111.125*	*124.562*	*100.965*	*3.175*	*20.676*	*43.663*	*6.10*
	85.00	*2085MMU*	*85.00*										
	90.00	*2090MMU*	*90.00*										
11	3 11/16	2311U	3.6875	7.0861	2.75	6.38	5.20	5.63	4.56	0.05	1.00	2.00	24.00
	3 15/16	2315U	3.9375										
	4	2400U	4.0000										
	100.00	*2100MMU*	*100.00*	*179.9869*	*69.8500*	*161.925*	*128.5494*	*142.875*	*115.875*	*3.175*	*25.400*	*50.800*	*10.90*

Additional Notes

Please call 1-866-REXNORD for availability

Metric bore sizes available, see Rex Interchangeability guide

Bearing O.D. tolerance, +.0000 in/-.0010 in *(+0.000 mm/-0.030 mm)*

Bore tolerance for all size codes, +.0010 in/-.0000 in *(+0.030 mm/-0.000 mm)*

For the Selection Guide, Load Ratings and Speed Limits, see the Spherical Roller Bearings Engineering section on pages 15 - 27.

Note: Dimensions subject to change. Certified dimensions of ordered material furnished on request.

3000U

Photo Shows an Unmounted Spherical Roller Bearing

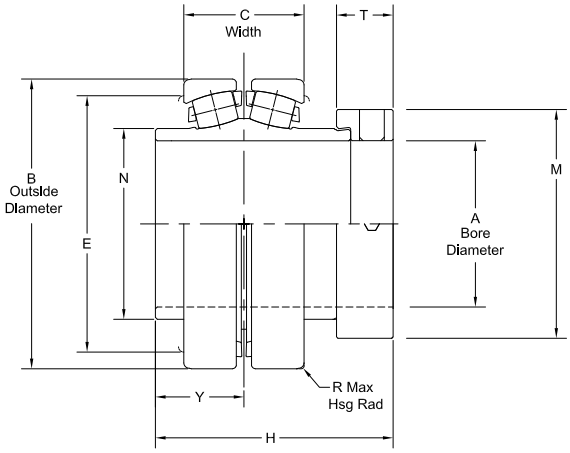

Product Features

Precision ground & superfinished raceways
Eccentric locking collar
Self aligning
See Features and Benefits for additional info on pages 10 - 13.

Bearing Dimensions

Size Code	Shaft Diameter	Part Number	A Bore Diameter	B Outside Diameter	C Width	E	H	M	N	R Housing Max	T	Y	Approx. Weight
4	1 7/16	3107U	1.4375	2.8350	1.31	2.50	2.92	2.30	1.75	0.05	0.66	1.09	2.40
5	1 11/16	3111U	1.6875	3.3469	1.58	2.88	3.18	2.58	2.03	0.05	0.68	1.22	3.40
6	1 15/16	3115U	1.9375	3.5438	1.53	3.19	3.28	2.75	2.31	0.05	0.72	1.22	3.50
7	2 3/16	3203U	2.1875	3.9375	1.66	3.50	3.50	3.25	2.62	0.05	0.92	1.25	4.90
8	2 7/16	3207U	2.4375	4.3312	1.75	3.88	3.65	3.55	2.90	0.05	0.94	1.31	6.00
	2 1/2	3208U	2.5000										
9	2 11/16	3211U	2.6875	5.1177	2.13	4.53	4.20	4.04	3.37	0.05	1.00	1.56	9.50
	2 15/16	3215U	2.9375										
10	3 7/16	3307U	3.4375	5.9050	2.31	5.34	4.57	4.90	3.98	0.05	1.00	1.72	13.00
	3 1/2	3308U	3.5000										
11	3 15/16	3315U	3.9375	7.0861	2.75	6.38	5.19	5.63	4.56	0.05	1.00	2.00	23.20

Additional Notes

Please call 1-866-REXNORD for availability
Bearing O.D. tolerance, +.0000 in/-.0010 in *(+0.000 mm/-0.030 mm)*
Bore tolerance for all size codes, +.0010 in/-.0000 in *(+0.030 mm/-0.000 mm)*
For the Selection Guide, Load Ratings and Speed Limits, see the Spherical Roller Bearings Engineering section on pages 15 - 27.
Note: Dimensions subject to change. Certified dimensions of ordered material furnished on request.

5000U

Photo Shows an Unmounted Spherical Roller Bearing

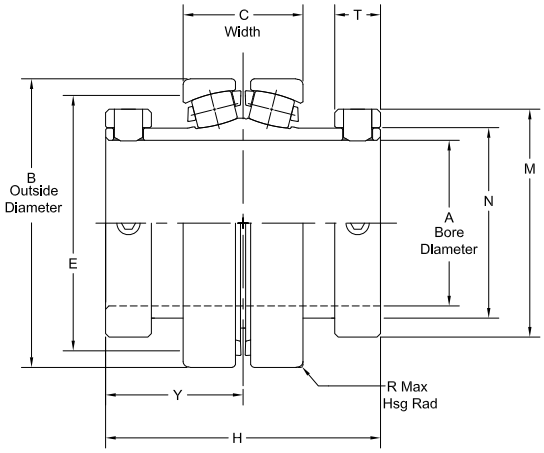

Product Features

Precision ground & superfinished raceways
Two hardened spring locking collars
Self aligning
See Features and Benefits for additional info on pages 10 - 13.

Bearing Dimensions

Size Code	Shaft Diameter	Part Number	A Bore Diameter	B Outside Diameter	C Width	E	H	M	N	R Housing Max	T	Y	Approx. Weight
4	1 7/16	5107U	1.4375	2.8350	1.31	2.50	3.45	2.30	1.75	0.05	0.63	1.78	2.70
5	1 1/2	5108U	1.5000	3.3469	1.58	2.88	3.81	2.58	2.03	0.05	0.63	1.91	4.00
	1 11/16	5111U	1.6875										
6	1 15/16	5115U	1.9375	3.5438	1.53	3.19	3.81	2.88	2.31	0.05	0.63	1.91	4.10
7	2	5200U	2.0000	3.9375	1.66	3.50	4.13	3.25	2.62	0.05	0.75	2.06	6.10
	2 3/16	5203U	2.1875										
8	2 7/16	5207U	1.4375	4.3312	1.75	3.88	4.37	3.55	2.90	0.05	0.81	2.19	6.80
9	2 1/2	5208U	2.5000	5.1177	2.13	4.53	4.87	4.04	3.37	0.05	0.81	2.44	11.50
	2 11/16	5211U	2.6875										
	2 3/4	5212U	2.7500										
	2 15/16	5215U	2.9375										
10	3 3/16	5303U	3.1875	5.9050	2.31	5.34	5.32	4.90	3.98	0.05	0.81	2.66	16.00
	3 7/16	5307U	3.4375										
11	3 11/16	5311U	3.6875	7.0861	2.75	6.38	6.25	5.63	4.56	0.05	1.00	3.06	26.00
	3 15/16	5315U	3.9375										
	4	5400U	4.0000										
12	4 3/16	5403YU	4.1875	7.6791	2.79	6.88	6.25	6.19	5.03	0.05	1.00	3.13	29.50
	4 7/16	5407YU	4.4375										
	4 1/2	5408YU	4.5000										
13	4 15/16	5415U	4.9375	9.0550	3.56	8.00	7.88	7.05	5.75	0.05	1.06	3.94	61.00
	5	5500U	5.0000										
14	5 7/16	5507U	5.4375	10.6322	3.91	9.25	8.00	8.19	6.50	0.05	1.19	4.00	79.00
15	5 15/16	5515U	5.9375	11.4196	4.01	10.13	8.13	8.64	7.20	0.05	1.13	4.07	95.00
	6	5600U	6.0000										
16	6 7/16	5607U	6.4375	12.6006	4.28	11.25	8.75	9.72	8.05	0.06	1.19	4.38	112.00
	6 1/2	5608U	6.5000										
	6 15/16	5615U	6.9375										
	7	5700U	7.0000										

Additional Notes

Please call 1-866-REXNORD for availability
Metric bore sizes available, see Rex Interchangeability guide
Bearing O.D. tolerance for size codes 4 thru 13, +.0000 in/-.0010 in *(+0.000 mm/-0.030 mm)*: for all other size codes, +.0000 in/-.0015 in *(+0.000 mm/-0.038 mm)*
Bore tolerance for all size codes, +.0010 in/-.0000 in *(+0.030 mm/-0.000 mm)*
For the Selection Guide, Load Ratings and Speed Limits, see the Spherical Roller Bearings Engineering section on pages 15 - 27.

Note: Dimensions subject to change. Certified dimensions of ordered material furnished on request.

6000U

Photo Shows an Unmounted Spherical Roller Bearing

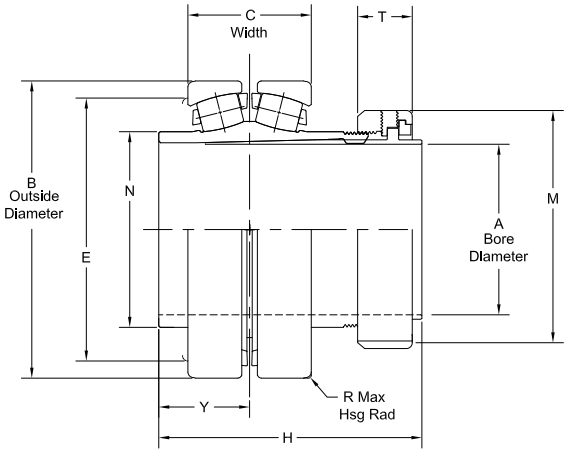

Product Features

Spyglass Optical Strain Sensor (OSS) Technology
Positive locking system
Tapered adapter sleeve
Precision ground & superfinished raceways
Self aligning
See Features and Benefits for additional info on pages 10 - 13.

Bearing Dimensions

Size Code	Shaft Diameter	Part Number	A Bore Diameter	B Outside Diameter	C Width	E	H	M	N	R Housing Max	T	Y	Approx. Weight
4	1 7/16	6107U	1.4375	2.8350	1.31	2.50	3.33	2.38	1.75	0.05	0.79	1.10	1.7
5	1 11/16	6111U	1.6875	3.3469	1.58	2.88	3.74	2.64	2.03	0.05	0.81	1.23	2.7
6	1 15/16	6115U	1.9375	3.5438	1.53	3.19	3.64	2.86	2.31	0.05	0.77	1.29	3.30
	45.00	*6045MMU*	*45.00*	*90.0125*	*38.760*	*80.975*	*92.4204*	*72.746*	*58.598*	*1.981*	*19.685*	*32.868*	*1.50*
7	2 3/16	6203U	2.1875	3.9375	1.66	3.50	3.77	3.24	2.62	0.05	0.82	1.25	4.60
	55.00	*6055MMU*	*55.00*	*100.0125*	*42.0624*	*88.900*	*93.4568*	*81.991*	*66.548*	*1.575*	*20.904*	*31.750*	*2.10*
8	2 3/8	6206U	2.3750	4.3312	1.75	3.88	4.16	3.59	2.90	0.05	0.90	1.31	5.80
	2 7/16	6207U	2.4375										
	60.00	*6060MMU*	*60.00*	*110.0125*	*44.450*	*98.425*	*103.0478*	*91.262*	*73.685*	*1.981*	*22.885*	*33.325*	*2.60*
9	2 11/16	6211U	2.6875	5.1177	2.13	4.53	4.53	4.09	3.37	0.05	0.94	1.56	9.50
	2 3/4	6212U	2.7500										
	2 15/16	6215U	2.9375										
	70.00	*6070MMU*	*70.00*	*129.9896*	*53.9750*	*115.087*	*115.1001*	*104.140*	*85.598*	*1.981*	*23.876*	*39.726*	*4.30*
	75.00	*6075MMU*	*75.00*										
10	3 3/16	6303U	3.1875	5.9050	2.31	5.34	5.14	4.95	3.98	0.05	1.09	1.73	13.50
	3 7/16	6307U	3.4375										
	80.00	*6080MMU*	*80.00*	*149.9870*	*58.7502*	*135.738*	*127.7798*	*125.730*	*100.965*	*3.175*	*27.661*	*43.815*	*6.10*
	85.00	*6085MMU*	*85.00*										
11	3 11/16	6311U	3.6875	7.0861	2.75	6.38	5.97	5.67	4.56	0.05	1.22	2.00	24.00
	3 15/16	6315U	3.9375										
	90.00	*6090MMU*	*100.00*	*179.9869*	*69.8500*	*161.925*	*147.0228*	*144.018*	*115.875*	*3.175*	*31.039*	*50.800*	*10.90*
	100.00	*6100MMU*											
12	4 3/16	6403YU	4.1875	7.6791	2.79	6.88	6.25	6.06	5.03	0.05	1.30	2.25	29.50
	4 7/16	6407YU	4.4375										
	110.00	*6110MMU*	*110.00*	*195.0491*	*68.0491*	*174.752*	*158.8872*	*154.026*	*127.813*	*3.175*	*33.096*	*57.150*	*13.40*
13	4 15/16	6415U	4.9375	9.0550	3.56	8.00	7.93	6.95	5.75	0.05	1.55	2.91	61.00
	125.00	*6125MMU*	*125.00*	*229.9970*	*90.3249*	*203.200*	*201.0105*	*176.555*	*146.050*	*3.175*	*39.370*	*73.812*	*27.70*
14	5 7/16	6507U	5.4375	10.6322	3.97	9.25	8.77	8.02	6.50	0.05	2.01	2.92	79.00
15	5 15/16	6515U	5.9375	11.4196	7.01	10.13	9.30	8.66	7.20	0.05	2.21	2.93	95.00
16	6 7/16	6607U	6.4375	12.6006	4.27	11.25	10.00	9.75	8.05	0.06	2.42	3.25	112.00
	6 15/16	6615U	6.9375										

Additional Notes

Please call 1-866-REXNORD for availability
Bearing O.D. tolerance, +.0000 in/-.0010 in *(+0.000 mm/-0.030 mm)*
Bore tolerance for all size codes, +.0010 in/-.0000 in *(+0.030 mm/-0.000 mm)*
For the Selection Guide, Load Ratings and Speed Limits, see the Spherical Roller Bearings Engineering section on pages 15 - 27.
Note: Dimensions subject to change. Certified dimensions of ordered material furnished on request.

9000U

Photo Shows an Unmounted Spherical Roller Bearing

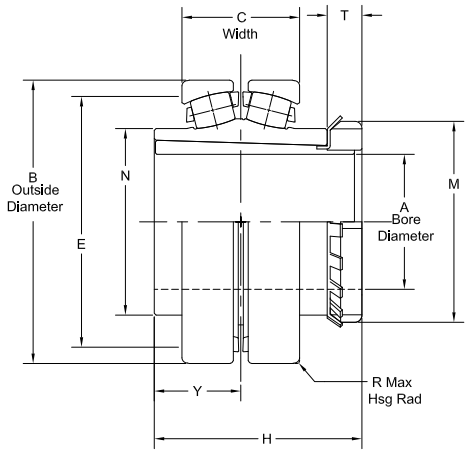

Product Features

Precision ground & superfinished raceways
Enhanced life mounting style
Self aligning
See Features and Benefits for additional info on pages 10 - 13.

Bearing Dimensions

Size Code	Shaft Diameter	Part Number	A Bore Diameter	B Outside Diameter	C Width	E	H	M	N	R Housing Max	T	Y	Approx. Weight
7	1 15/16	9115U	1.9375	3.9375	1.66	3.50	3.14	2.97	2.62	0.05	0.55	1.25	4.20
	2	9200U	2.0000										
8	2 3/16	9203U	2.1875	4.3312	1.75	3.88	3.34	3.38	2.90	0.05	0.62	1.31	5.30
9	2 7/16	9207U	2.4375	5.1177	2.13	4.53	3.74	3.63	3.37	0.05	0.63	1.56	7.80
	2 1/2	9208U	2.5000										
10	2 11/16	9211U	2.6875	5.9050	2.31	5.34	4.25	4.41	3.98	0.05	0.72	1.72	13.00
	2 15/16	9215U	2.9375										
	3	9300U	3.0000										
11	3 3/16	9303U	3.1875	7.0861	2.75	6.38	5.07	5.19	4.56	0.05	0.83	2.00	25.00
	3 7/16	9307U	3.4375										
12	3 11/16	9311YU	3.6875	7.6791	2.79	6.88	5.41	5.72	5.03	0.05	0.89	2.38	25.00
	3 15/16	9315YU	3.9375										
	4	9400YU	4.0000										
13	4 3/16	9403U	4.1875	9.0550	3.56	8.00	6.76	6.13	5.75	0.05	0.93	2.91	57.00
	4 7/16	9407U	4.4375										
14	4 15/16	9415U	4.9375	10.6322	3.98	9.25	7.19	7.09	6.50	0.05	1.05	2.93	69.00
	5	9500U	5.0000										
15	5 3/16	9503U	5.1875	11.4196	4.01	10.13	7.57	8.06	7.20	0.05	1.18	2.94	85.00
	5 7/16	9507U	5.4375										
16	5 15/16	9515U	5.9375	12.6006	4.28	11.25	7.75	9.06	8.05	0.06	1.24	3.25	104.00
	6	9600U	6.0000										
	6 7/16	9607U	6.4375										

Additional Notes

Please call 1-866-REXNORD for availability
Bearing O.D. tolerance for size codes 7 thru 13, +.0000 in/-.0010 in *(+0.000 mm/-0.030 mm)*: for all other size codes, +.0000 in/-.0015 in *(+0.000 mm/-0.038 mm)*
Bore tolerance for all size codes, +.0010 in/-.0000 in *(+0.030 mm/-0.000 mm)*
For the Selection Guide, Load Ratings and Speed Limits, see the Spherical Roller Bearings Engineering section on pages 15 - 27.
Note: Dimensions subject to change. Certified dimensions of ordered material furnished on request.

Rex Replacement Kits

Set Collar Kit

Eccentric Locking Collar Kit

Threaded Cover Kit

Adapter Sleeve Kit

Z Seal Kit - Contains 2 Seal Assemblies

K Seal Kit - Contains 2 Seal Assemblies

M Seal Kit - Contains 2 Seal Assemblies

G Seal Kit - Contains 2 Seal Assemblies

Microlock Assembly Kit

Part Numbers

Size Code	Z	K	M	G	Threaded Cover Kit	Set Collar Kit	Eccentric Locking Collar Kit	Microlock Assembly Kit	Adapter Assembly Kit
2	ZS2	KS2	MS2	-	TC2	SC2	-	ML2	-
3	ZS3	KS3	MS3	GS3	TC3	SC3	-	ML2	-
4	ZS4	KS4	MS4	GS4	TC4	SC4	SC3107	ML2	-
5	ZS5	KS5	MS5	GS5	TC5	SC5	SC3111	ML2	-
6	ZS6	KS6	MS6	GS6	TC6	SC6	SC3115	ML2	-
7	ZS7	KS7	MS7	GS7	TC7	SC7	SC3203	ML2	AK7115 AK7200
8	ZS8	KS8	MS8	GS8	TC8	SC8	SC3207 SC3208	ML3	AK8203
9	ZS9	KS9	MS9	GS9	TC9	SC9	SC3211 SC3215	ML3	AK9207 AK9208
10	ZS10	KS10	MS10	GS10	TC10	SC10	SC3307 SC3308	ML4*	AK10211 AK10215 AK10300
11	ZS11	KS11	MS11	GS11	TC11	SC11	SC3315	ML4	AK11303 AK11307 AK11308
12	ZS12Y	-	MS12Y	GS12	TC12Y	SC12Y	-	ML4	AK12311Y AK12315Y AK12400Y
13	ZS13	-	MS13	GS13	TC13	SC13	-	ML4	AK13403 AK13407
14	ZS14NEW	-	MS14	-	TC14NEW	SC14	-	ML4	AK14415 AK14500
15	ZS15NEW	-	MS15	-	TC15NEW	SC15	-	ML4	AK15503 AK15507
16	ZS16NEW	-	MS16	-	TC16NEW	SC16	-	ML4	AK16515 AK16600 AK16607

Additional Notes

*Floating units require ML-3

SHURLOK Installation Tools

Rex is pleased to offer a quick installation tool for the SHURLOK bearing. This tool is designed as a supplement to the spanner wrench or drift pin method. The installation tool can be attached to a 3/4" or 1/2" drive ratchet, torque wrench, or breaker bar which can be used as a lever arm. Simply fit the installation tool over the locknut by placing the tool's teeth into the locknut slots. The tool's unique shape allows it to be used from the side or the top of the bearing. To order, refer to the table below for the installation tool that fits your shaft size.

Bearing Size	Wrench Style Installation Tool Part Number	Impact Style Installation Tool Part Number
107	N6107-SPN	N6107-IMP
111	N6111-SPN	N6111-IMP
115	105-90420-11	105-90425-11
203	105-90420-21	105-90425-21
206/207	105-90420-31	105-90425-31
211/212/215	105-90420-41	105-90425-41
303/307	105-90420-51	105-90425-51
311/315	105-90420-61	105-90425-61
403/407	105-90420-71	105-90425-71
415	105-90420-81	105-90425-81
507		105-90425-91
515		105-90426-11
607/615		105-90426-21

Spherical Roller Bearings Units: Link-Belt

Contents

	Page
Features and Benefits	132
Nomenclature	134
Engineering	135
Dimensions	
Pillow Blocks	141
Flange Blocks	159
Cartridge Blocks	171
Take-up Blocks	177
Take-up Assemblies	181
Take-up Frames	183
Unmounted Replacement Bearings	185
Replacement Kits	189

Industries Served

Mining
Forest Products
Aggregates
Steel
Air Handling
Construction
Package Handling

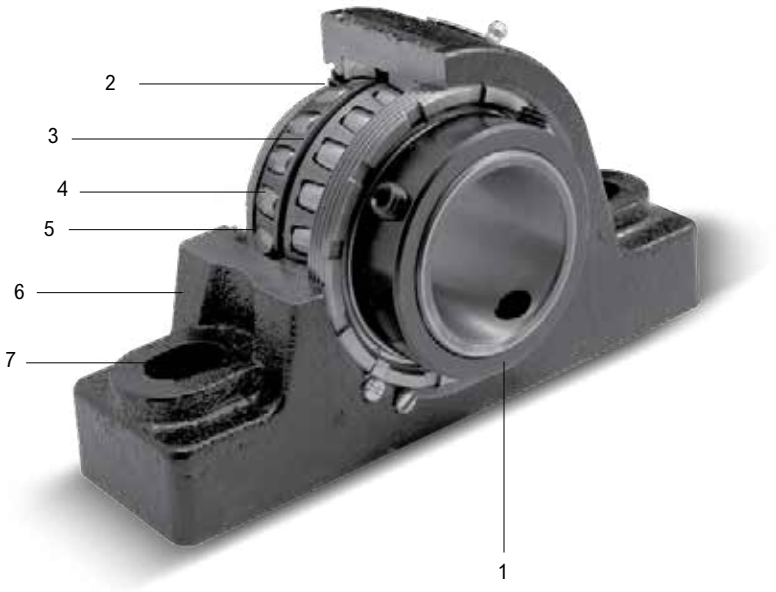

Link-Belt Spherical Roller Bearings

Self-aligning double row spherical roller bearings are designed to distribute the load over the symmetrical rollers, assuring positive tracking and smooth operation. The large roller complement provides high capacity for radial or combined radial-thrust loads. Osculation clearance at the ends of the rollers compensates for shock loads and prevents destructive edge loading. These precision bearings with double contoured retainer pockets are designed to meet a broad range of application requirements.

1. Mounting feature

- B22400 Series – Spring locking collar locks inner ring securely to shaft.
- B22500 Series – Two spring locking collars lock inner ring securely to shaft.
- B22600 Series – Tapered adapter mounting system.

2. Choice of three seals

- Floating Labyrinth Type H
- Spring-Loaded Lip Type E
- Triple Lip Type E7

3. Long inner ring for high stability and load support

4. Self-aligning double row

Spherical roller bearing allows for +/- 2 degrees of misalignment to accommodate variations between shaft and support structure as well as shaft deflection during operation.

5. Double contoured retainer pockets

Assures accurate roller control.

6. One-piece cast iron or cast steel housing.

7. Slotted bolt holes in pillow block

Bases facilitate mounting; bottom of base is machined.

Spring Locking Collar(s) – B22400 & B22500 Series

The spring locking collar(s) design provides a secure grip of the wide inner ring bearing to the shaft. The setscrews extend through the inner ring of the bearing and lock firmly onto the shaft. Installation is fast and simple. Correctly tightening the setscrews produces elastic strain in the spring locking collar resulting in a continuous pressure on the setscrew threads and providing a positive lock.

Series B22400, B22500 & B22600 Spherical Roller Bearing Units and Take-ups – Features and Benefits

Series B22400 are single collar mounted spherical roller bearing units. Series B22500 are double collar mounted spherical roller bearing units. Series B22600 are adapter mounted spherical roller bearing units. These units provide economic and versatile arrangements for supporting shafts carrying substantial radial or combination radial and thrust loads. These units are especially adaptable for conveyors, elevators, general industrial machinery, heavier duty fans and blowers, power transmission applications, ditchers, trenchers, pavers and other such applications. These series of bearings are easy to mount, sealed, pre-lubricated and do not require bearing adjustment during mounting.

Adapter Mount – B22600 Series

The adapter mounting provides better concentricity and shaft control, increasing service life. Where Turned, Ground and Polished shafting is the norm on collar-mounted units, the maximized mounting power of the B22600 allows for Commercial Grade Shafting compatibility (a commonly used grade of shafting due to its price and availability). Shaft damage from set screws is eliminated with the B22600's improved mounting design. Shaft damage from the bearing inner ring fretting to the shaft (the result of a clearance or loose fit) is also eliminated. These improvements facilitate easier bearing removal, replacement bearing installation and longer shaft service life.

Interchangeable Seals

Three standard sealing systems are available; each offering maximum protection for various application conditions. These seals are interchangeable and are designed for grease lubrication.

Type H Seal

Type H floating labyrinth seals have multiple self-centering rings held securely in a steel carrier. Type H seals are normally furnished.

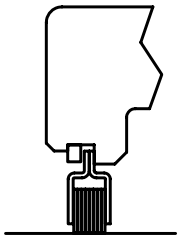

Type E Seal

Type E spring loaded lip seals utilize a spring to provide uniform pressure for keeping the sealing lip in contact with the inner ring. Type E seals are normally used for liquid splash environments.

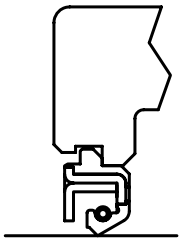

Type E7 Seal

Type E7 triple lip seal with metal outboard guard is designed for the most severe of applications. The outboard metal guard protects the inner seal lips from abrasion and damage. The three molded, heavy contact lips provide excellent protection from abrasive media, dust and moisture.

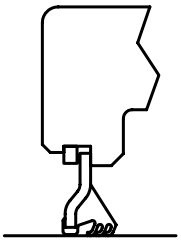

One-Piece Cast Iron or Cast Steel Housings

Compact one-piece housings provide for strength and load support. Scientifically contoured housing design provides superior rigidity. Cast iron or cast steel pillow blocks have two or four slotted bolt holes with ample space provided for drilling dowel pin holes. Flanged and flanged cartridge units have drilled mounting holes and machined mounting surfaces for maximum stability. Cartridge units have cast iron or steel housings and are finished to precision tolerances. Take-up units have machined slots for smooth, precise operation. Pillow blocks, flanged, and cartridge units are available for fixed or expansion operation.

Nomenclature

P E - B22 4 39 F H C 18A

Symbol	Description
C	Cartridge unit
CSE	Cartridge unit; steel housing
EF	Type E Flanged unit; 4-bolt square
EP	Type E Pillow block; cast iron
F	Flanged unit; 3- and 4-bolt
FB	Flanged bracket unit
FC	Flanged cartridge unit; 4-bolt round
P	Pillow block; cast iron
PK	Pillow block; cast steel housing
T	Take-up unit, slotted guides
DS	Take-up, conveyor, hinged top, welded steel frame
DSH	Take-up, conveyor, extra strength, welded steel frame
R	Collar opposite cover (B22400 only)
E	Expansion unit (not used with CSE symbol)
B22	Spherical roller bearing; extended inner ring separable outer rings
4	400 series designation (one locking collar)
5	500 series designation (two locking collars)
6	600 series designation (adapter mounted)
B	Inner ring bore equal to a bore of preceding smaller bearing group
39	Shaft diameter in 16ths of an inch
M55	Metric series, bore in mm
F	Four bolt base pillow block
H	Floating labyrinth seal
E	Spring-loaded lip seal
E7	Triple lip seal
C	Closed end unit
18	Take-up adjustment, inches
K4	100% grease filled
K5	No grease - preservative only
K6	100% grease filled and housing plugged
K93	Threaded cover held by dog point setscrews
K98	Threaded cover held by face lock setscrews
18A	SHC100 Grease
18W	SHC460 Grease
18Y	SHC220 Grease
4C	Dow Corning DC44 Grease
99A	Food Grade Grease
2, 3, 4, 5	Clearances other than standard

Seal Rating Guide

Application Conditions	Seal Ratings		
	Clearance	Heavy Contact	Triple Lip
	H	E	E7
Shaft position			
Horizontal Shaft	4	4	4
Veritcal Shaft	1	4	4
Operating Temperature			
Below -40°F	4	1	1
-40°F to 0°F	4	3	3
0°F to +250°F	4	4	4
+250°F to +400°F	4	0	0
Over 400°F	4	0	0
Speed			
Equal to / Less than limit below	4	4	4
More than limit below	4	1	1
Vibration/Shock			
Occasional - Mild	3	4	4
Occasional - Severe	2	4	4
Continuous - Mild	1	3	3
Continuous - Severe	0	3	3
Abrasive Material			
Coarse - Over #10 Mesh	4	4	4
Small - #10 to #50 Mesh	3	4	4
Fine - #50 to #200 Mesh	1	4	4
Very fine - Under #200 Mesh	0	4	4
Caking or buildup (cement, etc.)	2	4	4
Moisture			
Splash	2	4	4
Rain	2	4	4
Saturated Atmosphere	1	4	4
Flooding	0	3	4
Pressure Wash	0	4	4
Fibrous Material			
Short Fibers (lint, etc.)	1	4	4
Long Fibers (grass, etc.)	1	4	4
Chemical			
Acid Fumes and Liquids	1	1	1
Alkaline Fumes and Liquids	1	1	1

Rating Code

4 - Excellent - Best seal for conditions listed.

3 - Good - Sealability is above average.

2 - Fair - Seal performs under intermittent conditions.

1 - Limited - Actual conditions must be known to evaluate sealability. Contact Rexnord for special assistance in the realm of materials and designs.

0 - Not acceptable - Will not effectively perform seal functions. Contact Rexnord for special assistance in the realm of materials and designs.

Seal Selection Guide

The choice of the seal for a mounted bearing is often the key to successful bearing operation and long service life. The SEAL SELECTION GUIDE incorporates years of Rexnord's experience against the wide variety of conditions encountered on actual applications. Following the simple selection procedure outlined can translate the benefits of that broad experience to the individual applications through the choice of the most effective seal.

How to Use the Selection Guide

1. The appropriate seal for a given application may be selected by comparing the job application conditions against those listed in the SEAL RATING GUIDE on this page.
2. When more than one application condition is present, the most appropriate seal may be selected based on prime sealing for the most detrimental condition, and secondary consideration given to the other application conditions.

Considerations in Addition to Seal Selection

Under certain adverse conditions, other changes should be considered to achieve maximum bearing life:

A. High temperature lubricants where housing or ambient temperatures exceed +200°F,

B. Special greases for additional bearing protection where excessive water, solvents or chemicals are present.

C. EP (extreme pressure) greases where high load, high shock load, or continuous vibration is present.

D. Readjustment of internal operating clearance of bearing where extreme high or low temperature conditions exist.

Seal Speed Limit Table*

Size Code		B416	B420	B424	B428	B432	B436	B440	B448	B456	B464	B572	B580
Bearing Series	B22400	B22416	B22419 B22420	B22423 B22424	B224B24 B22426 B22427 B22428	B224B28 B22431 B22432	B22435 B22436	B224B36 B22439 B22440	B22443 B22444 B22447 B22448	B22451 B22455 B22456	B22459 B22463 B22464		
	B22500			B22523	B22527	B22531	B22532 B22535	B22539	B22543 B22547	B22555	B22563 B22564	B22567 B22571 B22572	B22579 B22580
	B22600			B22623	B22627	B22631	B22635	B22639	B22643 B22647	B22655	B22663		
(RPM)	H	4500	4000	3600	3100	2800	2500	2300	1950	1650	1400	1300	1200
	E	3500	3000	2750	2350	2150	1950	1750	1500	1250	1100	1000	900
	E7	N/A	2375	2175	1850	1675	1500	1350	1150	1000	850	775	650
Size Code		B416	B420	B424	B428	B432	B436	B440	B448	B456	B464	B572	B580

Refer to Seal Rating Guide shown above for speeds in excess of those listed in this table.

*Actual bearing speed limits are largely based upon the applied load and can be found on the Load Rating Table.

Series B22400, B22500 & B22600 Spherical Roller Bearing Selection Guide

To select a bearing, determine the applied radial load, the applied thrust load, the desired Rating Life, and applicable operating conditions. The procedure shown here will aid in selecting a bearing to meet an L_{10} design life. The formulas for calculating life expectancy should be used to determine the Rating Life L_{10} for the bearing selected.

The selection procedures and rating formulas shown here are in agreement witht the American Bearing Manufacturers Association (ABMA) standards and ANSI/ABMA Standards STD 11-1990. Ratings are based on fatigue life. The Rating Life L_{10} or fatigue life at 90% reliability is the usual basis for bearing selection. For radial load applications only, Table 4, can be used to select a bearing or to determine L_{10} life expectancy.

To assure a satisfactory bearing application, fitting practice, mounting, lubrication, sealing, static rating, housing strength, operating conditions and maintenance must be considered.

Steps for Selection

Step 1

Determine an appropriate L_{10} design life.

Type of service	Operating time, hours per year	Design life, years	L_{10} design life, hours
Light seasonal usage	500 to 750	3-5	3,000
Heavy seasonal usage	1,400 to 1,600	4-6	8,000
Industrial—8 hour shift	2,000	10	20,000
Industrial—16 hour shift	4,000	10	40,000
Industrial—continuous	8,700	10	80,000 to 100,000

Step 2

Determine a required $\left(\frac{C}{P}\right)$ from Table 1.

Step 3

Calculate the required C and select a roller bearing.

a For radial load only:

$P = F_r$

required $C = \left(\frac{C}{P}\right) P$ using $\left(\frac{C}{P}\right)$ from Step 2

Select a roller bearing from Table 2 with a basic load rating C equal to or greater than the required C.

Step 3 (continued)

b For combined radial and thrust loads:

Select a trial roller bearing of the desired shaft size from Table 2.

Calculate the ratio of thrust load F_a to the radial load F_r.

$$\frac{F_a}{F_r}$$

Calculate the equivalent radial load P

$$P = XF_r + YF_a$$

If $\frac{F_a}{F_r}$ is equal to or less than e, then $P = X_1F_r + Y_1F_a$

If $\frac{F_a}{F_r}$ is greater than e, then $P = X_2F_r + Y_2F_a$

For values of e, X_1, Y_1, X_2, and Y_2, see Table 2.

Calculate the required C

required $C = \left(\frac{C}{P}\right) P$ using $\left(\frac{C}{P}\right)$ from Step 2.

Consult Table 2, basic load rating. If a smaller bearing meets, or nearly meets, the required C, its life expectancy can be calculated.

Note: If the load P is greater than .25C, consult Rexnord Bearing Division.

Selection

Symbols for formulas:

C = basic load rating, pounds (or newtons)
Co = static load rating, pounds (or newtons)
e = a reference value
F_a = thrust load, pounds (or newtons)
F_r = radial load, pounds (or newtons)
L_{10} = rating life, hours
n = speed, revolutions per minute
P = equivalent radial load, pounds (or newtons)
X = radial factor
Y = thrust factor

Table 1 • Relation of L_{10} life and speed to $\left(\frac{C}{P}\right)$

Bearing Life Hours L_{10}	Speed, n								
	50	100	200	300	400	500	600	700	800
3000	1.93	2.38	2.93	3.31	3.61	3.86	4.07	4.27	4.44
4000	2.11	2.59	3.19	3.61	3.93	4.20	4.44	4.65	4.84
5000	2.25	2.77	3.42	3.86	4.20	4.50	4.75	4.97	5.18
6000	2.38	2.93	3.61	4.07	4.44	4.75	5.02	5.25	5.47
8000	2.59	3.19	3.93	4.44	4.84	5.18	5.47	5.73	5.96
10000	2.77	3.42	4.20	4.75	5.18	5.54	5.85	6.12	6.37
12000	2.93	3.61	4.44	5.02	5.47	5.85	6.18	6.47	6.73
14000	3.07	3.78	4.65	5.25	5.73	6.12	6.47	6.77	7.05
16000	3.19	3.93	4.84	5.47	5.96	6.37	6.73	7.05	7.34
18000	3.31	4.07	5.02	5.66	6.18	6.60	6.97	7.30	7.60
20000	3.42	4.20	5.18	5.85	6.37	6.81	7.20	7.54	7.85
25000	3.65	4.50	5.54	6.25	6.81	7.29	7.70	8.06	8.39
30000	3.86	4.75	5.85	6.60	7.20	7.70	8.13	8.51	8.86
35000	4.04	4.97	6.12	6.92	7.54	8.06	8.51	8.92	9.28
40000	4.20	5.18	6.37	7.20	7.85	8.39	8.86	9.28	9.66
45000	4.36	5.36	6.60	7.46	8.13	8.69	9.18	9.61	10.00
50000	4.50	5.54	6.81	7.70	8.39	8.97	9.48	9.92	10.30
60000	4.75	5.85	7.20	8.13	8.86	9.48	10.00	10.50	10.90
70000	4.97	6.12	7.54	8.51	9.28	9.92	10.50	11.00	11.40
80000	5.18	6.37	7.85	8.86	9.66	10.30	10.90	11.40	11.90
90000	5.36	6.60	8.13	9.18	10.00	10.70	11.30	11.80	12.30
100000	5.54	6.81	8.39	9.48	10.30	11.00	11.70	12.20	12.70
150000	6.25	7.70	9.48	10.70	11.70	12.50	13.20	13.80	14.40
200000	6.81	8.39	10.30	11.70	12.70	13.60	14.40	15.00	15.70
	Speed, n								
	900	1000	1200	1500	1800	2400	3000	3600	6000
3000	4.60	4.75	5.02	5.36	5.66	6.18	6.60	6.97	8.13
4000	5.02	5.18	5.47	5.85	6.18	6.73	7.20	7.60	8.86
5000	5.36	5.54	5.85	6.25	6.60	7.20	7.70	8.13	9.48
6000	5.66	5.85	6.18	6.60	6.97	7.60	8.13	8.59	10.00
8000	6.18	6.37	6.73	7.20	7.60	8.29	8.86	9.36	10.90
10000	6.60	6.81	7.20	7.70	8.13	8.86	9.48	10.00	11.70
12000	6.97	7.20	7.60	8.13	8.59	9.36	10.00	10.60	12.30
14000	7.30	7.54	7.96	8.51	8.99	9.80	10.50	11.10	12.90
16000	7.60	7.85	8.29	8.86	9.36	10.20	10.90	11.50	13.40
18000	7.88	8.13	8.59	9.18	9.70	10.60	11.30	11.90	13.90
20000	8.13	8.39	8.86	9.48	10.00	10.90	11.70	12.30	14.40
25000	8.69	8.97	9.48	10.10	10.70	11.70	12.50	13.20	15.40
30000	9.18	9.48	10.00	10.70	11.30	12.30	13.20	13.90	16.20
35000	9.61	9.92	10.50	11.20	11.80	12.90	13.80	14.60	17.00
40000	10.00	10.30	10.90	11.70	12.30	13.40	14.40	15.20	17.70
45000	10.40	10.70	11.30	12.10	12.80	13.90	14.90	15.70	18.30
50000	10.70	11.00	11.70	12.50	13.20	14.40	15.40	16.20	18.90
60000	11.30	11.70	12.30	13.20	13.90	15.20	16.20	17.10	20.00
70000	11.80	12.20	12.90	13.80	14.60	15.90	17.00	17.90	20.90
80000	12.30	12.70	13.40	14.40	15.20	16.50	17.70	18.70	21.80
90000	12.80	13.20	13.90	14.90	15.70	17.10	18.30	19.40	22.60
100000	13.20	13.60	14.40	15.40	16.20	17.70	18.90	20.00	23.30
150000	14.90	15.40	16.20	17.30	18.30	20.00	21.40	22.60	26.30
200000	16.20	16.70	17.70	18.90	20.00	21.80	23.30	24.60	28.70

Basic Formula

$$\left(\frac{C}{P}\right) = \left(\frac{L_{10} \times n \times 60}{1{,}000{,}000}\right)^{3/10}$$

$$L_{10} = \frac{\left(\frac{C}{P}\right)^{10/3} \times 1{,}000{,}000}{n \times 60}$$

Life Expectancy

To calculate the Rating Life L_{10} of any selected or trial bearing:

Step 1

Determine the equivalent radial load P.

a For radial load only:

$$P = F_r$$

b For combined radial and thrust load:

$$P = XF_r + YF_a$$

if $\frac{F_a}{F_r}$ is equal to or less than e, then

$$P = X1F_r + Y1F_a$$

if $\frac{F_a}{F_r}$ is greater than e, then

$$P = X_2F_r + Y_2F_a$$

For values of e, X1, Y1, X2, and Y2, consult the appropriate bearing rating Table 2.

Step 2

Calculate the ratio of the basic load rating C to the equivalent radial load.

$$\left(\frac{C}{P}\right)$$

Step 3

Approximate the bearing life from Table 1.

Life Adjustment

The Rating Life, L_{10}, may be modified for some applications in accordance with the formula

$$L_n = a_1a_2a_3L_{10}$$

where L_n = Adjusted life for (100-n) % reliability,
a_1 = Life adjustment factor for reliability
a_2 = Life adjustment factor for material and processing
a_3 = Life adjustment factor for operating conditions.

For most normal applications, all factors will be taken as 1, and the Rating Life used as the selection basis or life estimate. In addition, as long as standard catalog bearings are used, a_2 will be normally set equal to one.

The factor a_3 covers such things as lubrication, misalignment, and temperature. Some conditions that could yield a_3 significantly different than unity include speeds less than 20000 DN or greater than 200000 DN, temperatures below –40°F *(–40°C)* or above 275°F *(135°C)*. For other possible conditions, as well as additional information on life adjustment factors, consult Rexnord Bearing Division.

Table 2 • Load Ratings and Speed Limits

Size Code	Co Static Load Rating		C Basic Load Rating		Approximate Speed Limit RPM*			e	Fa/Fr ≤ e		Fa/Fr > e	
	newtons	pounds	newtons	pounds	H seal	E seal	E7 seal		X1	Y1	X2	Y2
B416	66279	14900	62720	14100	4500	3500	---	0.51	1.00	1.32	0.67	1.96
B420	81402	18300	75175	16900	4000	3000	1700	0.48	1.00	1.40	0.67	2.08
B424 B524 B624	92968	20900	79178	17800	3600	2750	1575	0.44	1.00	1.54	0.67	2.29
B428 B528	127664	28700	109871	24700	3100	2350	1325	0.45	1.00	1.51	0.67	2.25
B432 B531 B631	147681	33200	115209	25900	2800	2150	1225	0.40	1.00	1.68	0.67	2.50
B436 B536 B635	197501	44400	144567	32500	2500	1950	1075	0.40	1.00	1.68	0.67	2.50
B440 B540 B639	237980	53500	170367	38300	2300	1750	975	0.38	1.00	1.80	0.67	2.68
B448 B548 B647	318048	71500	227304	51100	1950	1500	850	0.38	1.00	1.79	0.67	2.67
B456 B556 B655	403454	90700	277124	62300	1650	1250	725	0.38	1.00	1.77	0.67	2.64
B464 B564 B663	609406	137000	429253	96500	1400	1100	625	0.36	1.00	1.88	0.67	2.79
B572	708602	159300	486635	109400	1300	1000	550	0.38	1.00	1.80	0.67	2.68
B580	1076025	241900	739294	166200	1200	900	525	0.37	1.00	1.83	0.67	2.72

If the load P is greater than .25C, consult Rexnord Bearing Division.

For B22400 Series, reduce C Basic Load rating by 15%.

For B22500 Series, reduce C Basic Load rating by 5%.

For vertical shift application, consult Rexnord Bearing Division.

*Based on grease lubrication and moderate load.

Table 3 • Size Code Interchange Table

Shaft Size	B22400 Series Single Set Collar	B22500 Series Double Set Collar	B22600 Series Tapered Adapter	Size Code
	Bearing Number	Bearing Number	Bearing Number	
1 *25 mm*	B22416 *B224M25*			B416
1-3/16 1-1/4 *30 mm*	B22419 B22420 *B224M30*			B420
1-7/16 1-1/2 *35 mm*	B22423 B22424 *B224M35*	B22523	B22623	B424 B524 B624
1-1/2 1-5/8 1-11/16 1-3/4 *40 mm*	B224B24 B22426 B22427 B22428 *B224M40*	B22527		B428 B528
1-3/4 1-15/16 2 *45 mm* *50 mm*	B224B28 B22431 B22432 *B224M45* *B224M50*	B22531	B22631	B432 B531 B631
2 2-3/16 2-1/4 *55 mm*	 B22435 B22436 *B224M55*	B22532 B22535	B22635	B436 B536 B635
2-1/4 2-7/16 2-1/2 *60 mm*	B224B36 B22439 B22440 *B224M60*	B22539	B22639	B440 B540 B639
2-11/16 2-3/4 2-15/16 3 *65 mm* *70 mm* *75 mm*	B22443 B22444 B22447 B22448 *B224M65* *B224M70* *B224M75*	B22543 B22547	B22643 B22647	B448 B548 B647
3-3/16 3-7/16 3-1/2 *80 mm* *85 mm*	B22451 B22455 B22456 *B224M80* *B224M85*	B22555	B22655	B456 B556 B655
3-11/16 3-15/16 4 *90 mm* *100 mm*	B22459 B22463 B22464 *B224M90* *B224M100*	B22559 B22563 B22564	B22663	B464 B564 B663
4-3/16 4-7/16 4-1/2 *110 mm* *115 mm*		B22567 B22571 B22572 *B225M110* *B225M115*		B572
4-15/16 5 *125 mm*		B22579 B22580 *B225M125*		B580

Table 4 • Radial Load Ratings in Pounds at Various RPM for Appropriate L_{10} Life Hours

Size Code	L_{10} Lifehours	50	100	200	300	400	500	600	700	800	900	1000	1200	1500	1800	2000	2500	3000	3500
B416	8000	*	*	*	3175	2912	2724	2579	2462	2365	2283	2212	2095	1959	1855	1797	1681	1591	1519
	20000	*	3353	2724	2412	2212	2069	1959	1870	1797	1735	1681	1591	1488	1409	1365	1277	1209	1154
	40000	3353	2724	2212	1959	1797	1681	1591	1519	1460	1409	1365	1292	1209	1144	1109	1037	982	937
	100000	2547	2069	1681	1488	1365	1277	1209	1154	1109	1070	1037	982	918	869	842	788	746	712
B420	8000	*	*	*	3805	3491	3265	3091	2951	2835	2737	2652	2510	2348	2223	2154	2014	1907	1821
	20000	*	4019	3265	2891	2652	2480	2348	2242	2154	2079	2014	1907	1784	1689	1636	1530	1449	1383
	40000	4019	3265	2652	2348	2154	2014	1907	1821	1749	1689	1636	1549	1449	1372	1329	1243	1177	1124
	100000	3053	2480	2014	1784	1636	1530	1449	1383	1329	1283	1243	1177	1101	1042	1010	944	894	854
B424	8000	*	*	*	4008	3676	3438	3255	3108	2986	2883	2793	2644	2473	2341	2268	2122	2009	1918
B524	20000	*	4233	3438	3045	2793	2612	2473	2361	2268	2190	2122	2009	1879	1779	1723	1612	1526	1457
B624	40000	4233	3438	2793	2473	2268	2122	2009	1918	1843	1779	1723	1632	1526	1445	1400	1309	1239	1183
	100000	3216	2612	2122	1879	1723	1612	1526	1457	1400	1351	1309	1239	1159	1097	1063	994	942	899
B428	8000	*	*	*	5561	5102	4771	4517	4313	4144	4000	3875	3669	3432	3249	3148	2944	2787	2661
B528	20000	*	5874	4771	4225	3875	3625	3432	3277	3148	3039	2944	2787	2607	2468	2391	2236	2117	2022
	40000	5874	4771	3875	3432	3148	2944	2787	2661	2557	2468	2391	2264	2117	2005	1942	1817	1720	1642
	100000	4462	3625	2944	2607	2391	2236	2117	2022	1942	1875	1817	1720	1609	1523	1476	1380	1307	1247
B432	8000	*	*	*	5832	5349	5003	4737	4523	4345	4194	4064	3847	3598	3407	3301	3087	2923	2791
B531	20000	*	6159	5003	4430	4064	3801	3598	3436	3301	3186	3087	2923	2733	2588	2507	2345	2220	2120
B631	40000	6159	5003	4064	3598	3301	3087	2923	2791	2681	2588	2507	2374	2220	2102	2037	1905	1803	1722
	100000	4679	3801	3087	2733	2507	2345	2220	2120	2037	1966	1905	1803	1687	1597	1547	1447	1370	1308
B436	8000	*	*	*	7318	6713	6278	5944	5675	5452	5263	5099	4828	4515	4275	4142	3874	3668	3502
B536	20000	*	7729	6278	5559	5099	4769	4515	4311	4142	3998	3874	3668	3430	3247	3146	2943	2786	2660
B635	40000	7729	6278	5099	4515	4142	3874	3668	3502	3364	3247	3146	2979	2786	2638	2556	2390	2263	2161
	100000	5871	4769	3874	3430	3146	2943	2786	2660	2556	2467	2390	2263	2116	2004	1941	1816	1719	1641
B440	8000	*	*	*	8624	7911	7398	7005	6688	6425	6202	6009	5689	5321	5038	4881	4565	4322	
B540	20000	*	9108	7398	6551	6009	5620	5321	5081	4881	4712	4565	4322	4042	3827	3708	3468	3283	
B639	40000	9108	7398	6009	5321	4881	4565	4322	4127	3965	3827	3708	3511	3283	3109	3012	2817	2667	
	100000	6919	5620	4565	4042	3708	3468	3283	3135	3012	2907	2817	2667	2494	2361	2288	2140	2026	
B448	8000	*	*	*	11506	10554	9871	9346	8923	8573	8275	8018	7591	7099	6722	6512	6091		
B548	20000	*	12153	9871	8740	8018	7499	7099	6779	6512	6286	6091	5766	5393	5106	4947	4627		
B647	40000	12153	9871	8018	7099	6512	6091	5766	5506	5290	5106	4947	4684	4381	4147	4018	3758		
	100000	9232	7499	6091	5393	4947	4627	4381	4183	4018	3879	3758	3558	3328	3151	3053	2855		
B456	8000	*	*	*	14027	12868	12034	11394	10879	10452	10089	9775	9255	8655	8195	7940	7426		
B556	20000	*	14816	12034	10656	9775	9142	8655	8264	7940	7664	7426	7030	6575	6225	6031	5641		
B655	40000	14816	12034	9775	8655	7940	7426	7030	6713	6449	6225	6031	5710	5341	5056	4899	4582		
	100000	11255	9142	7426	6575	6031	5641	5341	5099	4899	4729	4582	4338	4057	3841	3722	3481		
B464	8000	*	*	*	21728	19931	18641	17649	16851	16189	15627	15141	14335	13407	12693	12298			
B564	20000	*	22949	18641	16506	15141	14161	13407	12801	12298	11871	11502	10890	10185	9643	9343			
B663	40000	22949	18641	15141	13407	12298	11502	10890	10398	9989	9643	9343	8845	8272	7832	7588			
	100000	17434	14161	11502	10185	9343	8738	8272	7899	7588	7325	7097	6719	6284	5950	5765			
B572	8000	*	*	*	42870	39326	36779	34822	33248	31942	30833	29874	28284	26453	25045				
	20000	*	45281	36779	32567	29874	27940	26453	25257	24265	23423	22694	21486	20095	19025				
	40000	45281	36779	29874	26453	24265	22694	21486	20515	19710	19025	18433	17452	16322	15453				
	100000	34398	27940	22694	20095	18433	17240	16322	15584	14973	14453	14003	13258	12399	11739				
B580	8000	*	*	*	37422	34327	32105	30396	29022	27882	26914	26077	24689	23090					
	20000	*	39525	32105	28428	26077	24389	23090	22047	21181	20446	19810	18755	17541					
	40000	39525	32105	26077	23090	21181	19810	18755	17908	17204	16607	16090	15234	14248					
	100000	30026	24389	19810	17541	16090	15049	14248	13604	13069	12616	12223	11573	10823					

* Load exceeds 25% of the C rating, consult Rexnord Bearing Division.

PB22400, PEB22400

Interchange: *P2BS2, SYR, USRB5000, QAPL*

Photo Shows a 2-Bolt Spherical Roller Bearing Pillow Block Unit

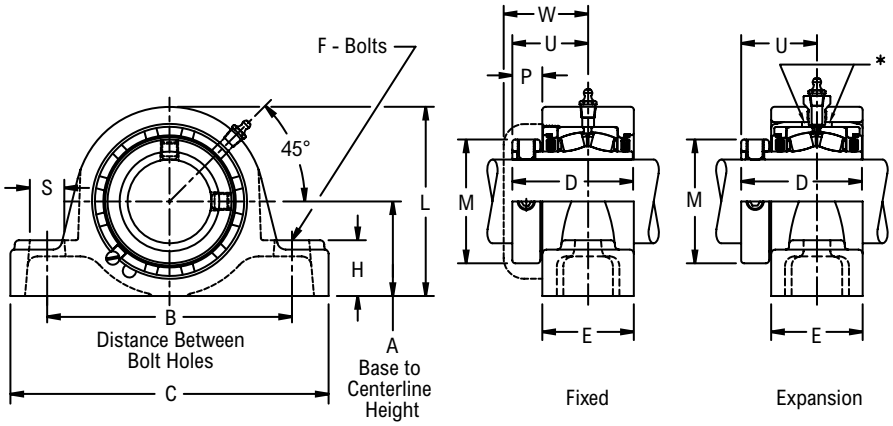

Product Features

- Corrosion-resistant powder coating
- Cast iron housing
- Misalignment capabilities - total of 4°
- Broad range of sealing options
- Factory set clearance & lubrication
- Hardened spring locking collar
- Field interchangeable seals
- Fixed or Expansion - total of 3/8" expansion
- See Features and Benefits for additional info on pages 132 - 133.

Bearing Dimensions

Size Code	Shaft Diameter	Expansion Part Number	Expansion L	Expansion S	Fixed Part Number	Fixed L	Fixed S	A Base to Centerline Height	B Distance Between Bolt Holes	C	D	E	F Bolts	H	M	P	U	W	Approx. Weight
B416	1	PEB22416H	3 5/16	5/8	PB22416H	3 1/8	5/8	1 9/16	4 3/8	5 15/16	2 9/16	2 1/16	3/8	7/8	1 3/4	17/32	1 9/16	1 29/32	5.00
	25.00	*PEB224M25H*	*84.10*	*15.90*	*PB224M25H*	*79.40*	*15.90*	*39.67*	*111.10*	*150.80*	*65.09*	*52.40*	*10.00*	*22.20*	*44.40*	*13.50*	*39.70*	*48.40*	*2.10*
B420	1 3/16	PEB22419H	3 5/8	5/8	PB22419H	3 1/2	5/8	1 3/4	4 3/4	6 5/16	2 11/16	2 3/16	3/8	1 1/16	1 31/32	17/32	1 5/8	1 31/32	6.00
	1 1/4	PEB22420H			PB22420H														
	30.00	*PEB224M30H*	*92.10*	*15.90*	*PB224M30H*	*88.90*	*15.90*	*44.45*	*120.60*	*160.30*	*68.26*	*55.60*	*10.00*	*27.00*	*50.00*	*13.50*	*41.30*	*50.00*	*2.90*
B424	1 7/16	PEB22423H	3 7/8	7/8	PB22423H	3 11/16	13/16	1 7/8	5	6 9/16	2 7/8	2 1/4	1/2	1 3/16	2 5/16	21/32	1 25/32	2 3/16	7.00
	1 1/2	PEB22424H			PB22424H														
	35.00	*PEB224M35H*	*98.40*	*22.22*	*PB224M35H*	*93.70*	*20.60*	*47.62*	*127.00*	*166.69*	*73.02*	*57.20*	*12.00*	*30.20*	*58.70*	*16.70*	*45.20*	*55.60*	*3.20*
B428	1 5/8	PEB22426H	4 3/8	7/8	PB22426H	4 1/4	13/16	2 1/8	5 1/2	7 1/8	3 1/8	2 1/2	1/2	1 5/16	2 19/32	21/32	1 29/32	2 1/4	10.00
	1 11/16	PEB22427H			PB22427H														
	1 3/4	PEB22428H			PB22428H														
	40.00	*PEB224M40H*	*111.10*	*22.22*	*PB224M40H*	*108.00*	*20.60*	*53.98*	*139.70*	*180.98*	*79.38*	*63.50*	*12.00*	*33.30*	*65.90*	*16.70*	*48.40*	*57.20*	*4.70*
B432	1 15/16	PEB22431H	4 9/16	15/16	PB22431H	4 9/16	15/16	2 1/4	6 1/4	8 1/8	3 1/8	2 1/2	5/8	1 3/8	2 7/8	21/32	1 29/32	2 9/32	12.00
	2	PEB22432H			PB22432H														
	45.00	*PEB224M45H*	*115.90*	*23.80*	*PB224M45H*	*115.90*	*23.80*	*57.15*	*158.80*	*206.38*	*79.38*	*63.50*	*16.00*	*34.90*	*73.00*	*16.70*	*48.40*	*57.90*	*5.50*
	50.00	*PEB224M50H*			*PB224M50H*														*5.20*
B436	2 3/16	PEB22435H	5	15/16	PB22435H	5	15/16	2 1/2	6 3/4	8 5/8	3 5/16	2 9/16	5/8	1 5/8	3 1/4	25/32	2 1/16	2 7/16	14.00
	2 1/4	PEB22436H			PB22436H														
	55.00	*PEB224M55H*	*127.00*	*23.80*	*PB224M55H*	*127.00*	*23.80*	*63.50*	*171.40*	*219.08*	*84.14*	*65.10*	*16.00*	*41.30*	*82.60*	*19.80*	*52.40*	*61.90*	*6.50*
B440	2 7/16	PEB22439H	5 1/2	15/16	PB22439H	5 1/2	15/16	2 3/4	7 1/8	9 1/8	3 1/2	2 11/16	5/8	1 5/8	3 9/16	27/32	2 3/16	2 9/16	17.00
	2 1/2	PEB22440H			PB22440H														
	60.00	*PEB224M60H*	*139.70*	*23.80*	*PB224M60H*	*139.70*	*23.80*	*69.85*	*181.00*	*231.78*	*88.90*	*68.30*	*16.00*	*41.30*	*90.50*	*21.40*	*55.60*	*65.10*	*8.00*
B448	2 11/16	PEB22443H	6 7/16	1 1/16	PB22443H	6 7/16	1 1/16	3 1/4	8 1/8	10 7/16	4	3 3/16	3/4	2	4 1/16	27/32	2 7/16	2 25/32	29.00
	2 3/4	PEB22444H			PB22444H														
	2 15/16	PEB22447H			PB22447H														27.00
	3	PEB22448H			PB22448H														
	65.00	*PEB224M65H*	*163.50*	*27.00*	*PB224M65H*	*163.50*	*27.00*	*82.55*	*206.40*	*265.10*	*101.60*	*81.00*	*20.00*	*57.20*	*103.20*	*21.40*	*61.90*	*70.60*	*13.20*
	70.00	*PEB224M70H*			*PB224M70H*														*13.00*
	75.00	*PEB224M75H*			*PB224M75H*														*12.50*
B456	3 3/16	PEB22451H	7 1/2	1 5/8	PB22451H	7 1/2	1 5/8	3 3/4	10	13	4 3/8	3 7/16	7/8	2 1/4	4 29/32	15/16	2 21/32	3	43.00
	3 7/16	PEB22455H			PB22455H														42.00
	3 1/2	PEB22456H			PB22456H														41.00
	80.00	*PEB224M80H*	*190.50*	*41.30*	*PB224M80H*	*190.50*	*41.30*	*95.25*	*254.00*	*330.20*	*111.12*	*87.30*	*24.00*	*57.20*	*124.60*	*23.80*	*67.50*	*76.20*	*19.60*
	85.00	*PEB224M85H*			*PB224M85H*														*19.10*

Continued...

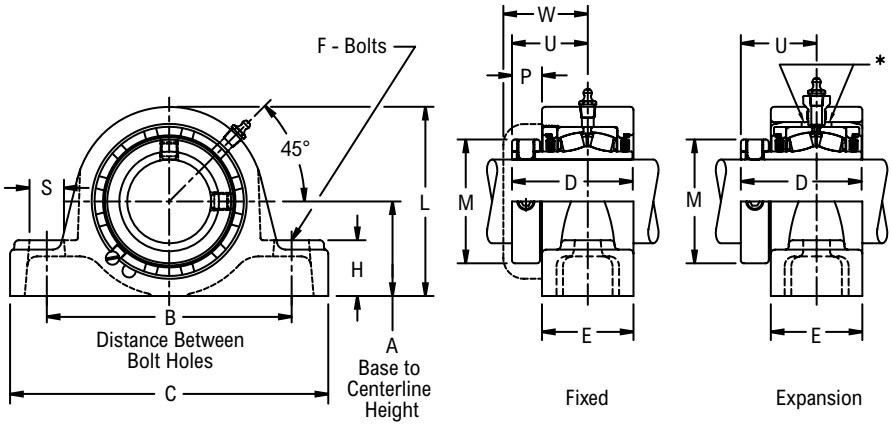

Continued...

Bearing Dimensions

Size Code	Shaft Diameter	Expansion			Fixed			A Base to Centerline Height	B Distance Between Bolt Holes	C	D	E	F Bolts	H	M	P	U	W	Approx. Weight
		Part Number	L	S	Part Number	L	S												
B464	3 11/16	PEB22459H	8 1/2	2 1/4	PB22459H	8 1/2	2 1/4	4 1/4	11 3/4	15 1/4	5 1/16	4 3/16	1	2 5/8	5 5/8	1 1/16	3 1/16	3 7/16	61.00
	3 15/16	PEB22463H			PB22463H														59.00
	4	PEB22464H			PB22464H														
	90.00	*PEB224M90H*	*215.90*	*57.20*	*PB224M90H*	*215.90*	*57.20*	*107.95*	*298.40*	*387.40*	*128.59*	*106.40*	*24.00*	*66.70*	*142.90*	*27.00*	*77.80*	*87.30*	*28.70*
	100.00	*PEB224M100H*			*PB224M100H*														*26.90*
B464L	3 15/16	-	-	-	PLB22463H	8 3/8	1 7/8	4 1/8	10 7/8	14 1/4	5 1/16	4 3/16	1	2 1/2	5 5/8	1 1/16	3 1/16	3 7/16	58.00
	4	-	-	-	PLB22464H														

Additional Notes

Please call 1-866-REXNORD for availability
Lubrication fitting tap size, 1/8" PT
Base to centerline tolerance, +/-.005" *(+/-0.13 mm)*
Expansion - is 3/8" for all size codes
H labyrinth seals standard

All size codes available with type E lip seals, except E7 in size code B416
For the Selection Guide, Load Ratings and Speed Limits, see the Link-Belt Spherical Roller Bearings Engineering section on pages 135 - 140.
Note: Dimensions subject to change. Certified dimensions of ordered material furnished on request.

PB22400F, PEB22400F

Interchange: *P4BS2, FSYR, USRBF5000, QAPF*

Photo Shows a 4-Bolt Spherical Roller Bearing Pillow Block Unit

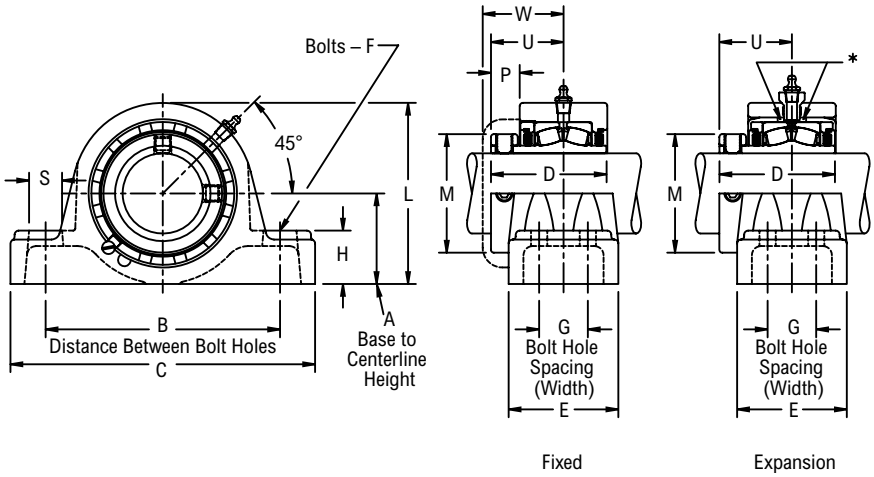

Product Features

- Corrosion-resistant powder coating
- Cast iron housing
- Misalignment capabilities - total of 4°
- Broad range of sealing options
- Factory set clearance & lubrication
- Hardened spring locking collar
- Field interchangeable seals
- Fixed or Expansion - total of 3/8" expansion
- See Features and Benefits for additional info on pages 132 - 133.

Bearing Dimensions

Size Code	Shaft Diameter	Expansion Part Number	Fixed Part Number	A Base to Centerline Height	B Distance Between Bolt Holes	G Bolt Hole Spacing (Width)	C	D	E	F Bolts	H	L	M	P	S	U	W	Approx. Weight
B432	1 15/16	PEB22431FH	PB22431FH	2 1/4	6 1/4	1 19/32	8 3/8	3 1/8	3 3/16	1/2	1 3/8	4 9/16	2 7/8	21/32	13/16	1 29/32	2 9/32	13.00
	2	PEB22432FH	PB22432FH															
	45.00	*PEB224M45FH*	*PB224M45FH*	*57.15*	*158.80*	*40.50*	*212.70*	*79.38*	*81.00*	*12.00*	*34.90*	*115.90*	*73.00*	*16.70*	*20.60*	*48.40*	*57.90*	*6.30*
	50.00	*PEB224M50FH*	*PB224M50FH*															*5.90*
B436	2 3/16	PEB22435FH	PB22435FH	2 1/2	6 3/4	1 11/16	8 7/8	3 5/16	3 1/4	1/2	1 5/8	5	3 1/4	25/32	13/16	2 1/16	2 7/16	15.00
	2 1/4	PEB22436FH	PB22436FH															
	55.00	*PEB224M55FH*	*PB224M55FH*	*63.50*	*171.40*	*42.90*	*225.40*	*84.14*	*82.60*	*12.00*	*41.30*	*127.00*	*82.60*	*19.80*	*20.60*	*52.40*	*61.90*	*6.90*
B440	2 7/16	PEB22439FH	PB22439FH	2 3/4	7 1/8	1 3/4	9 1/4	3 1/2	3 3/8	1/2	1 3/4	5 1/2	3 9/16	27/32	13/16	2 3/16	2 9/16	19.00
	2 1/2	PEB22440FH	PB22440FH															
	60.00	*PEB224M60FH*	*PB224M60FH*	*69.85*	*181.00*	*44.40*	*235.00*	*88.90*	*85.70*	*12.00*	*44.40*	*139.70*	*90.50*	*21.40*	*20.60*	*55.60*	*65.10*	*8.60*
B448	2 11/16	PEB22443FH	PB22443FH	3 1/4	8 1/8	1 7/8	10 7/16	4	3 3/4	5/8	2 1/4	6 7/16	4 1/16	27/32	15/16	2 7/16	2 25/32	30.00
	2 3/4	PEB22444FH	PB22444FH															
	2 15/16	PEB22447FH	PB22447FH															29.00
	3	PEB22448FH	PB22448FH															28.00
	65.00	*PEB224M65FH*	*PB224M65FH*	*82.55*	*206.40*	*47.60*	*265.10*	*101.60*	*95.20*	*16.00*	*57.20*	*163.50*	*103.20*	*21.40*	*23.80*	*61.90*	*70.60*	*13.70*
	70.00	*PEB224M70FH*	*PB224M70FH*															*13.50*
	75.00	*PEB224M75FH*	*PB224M75FH*															*13.00*
B456	3 3/16	PEB22451FH	PB22451FH	3 3/4	10	2	13	4 3/8	4 1/8	3/4	2 1/4	7 1/2	4 29/32	15/16	1 1/2	2 21/32	3	45.00
	3 7/16	PEB22455FH	PB22455FH															43.00
	3 1/2	PEB22456FH	PB22456FH															
	80.00	*PEB224M80FH*	*PB224M80FH*	*95.25*	*254.00*	*50.80*	*330.20*	*111.12*	*104.80*	*20.00*	*57.20*	*190.50*	*124.60*	*23.80*	*38.10*	*67.50*	*76.20*	*20.50*
	85.00	*PEB224M85FH*	*PB224M85FH*															*20.00*
B464	3 11/16	PEB22459FH	PB22459FH	4 1/4	12 1/2	2 1/4	15 1/4	5 1/16	4 1/2	3/4	2 5/8	8 1/2	5 5/8	1 1/16	1 1/4	3 1/16	3 7/16	69.00
	3 15/16	PEB22463FH	PB22463FH															67.00
	4	PEB22464FH	PB22464FH															66.00
	90.00	*PEB224M90FH*	*PB224M90FH*	*107.95*	*317.50*	*57.20*	*387.40*	*128.59*	*114.30*	*20.00*	*66.70*	*215.90*	*142.90*	*27.00*	*31.80*	*77.80*	*87.30*	*32.10*
	100.00	*PEB224M100FH*	*PB224M100FH*															*30.30*

Additional Notes

- Please call 1-866-REXNORD for availability
- Lubrication fitting tap size, 1/8" PT
- Base to centerline tolerance, +/-.005" *(+/-0.13 mm)*
- Expansion - is 3/8" for all size codes
- H labyrinth seals standard
- All size codes available with type E lip seals & E7 triple lip seals

For the Selection Guide, Load Ratings and Speed Limits, see the Link-Belt Spherical Roller Bearings Engineering section on pages 135 - 140.

Note: Dimensions subject to change. Certified dimensions of ordered material furnished on request.

PB22500, PEB22500, PB22500F, PEB22500F

Interchange: *QAAPL, QAAPF*

Photo Shows a 4-Bolt Spherical Roller Bearing Pillow Block Unit

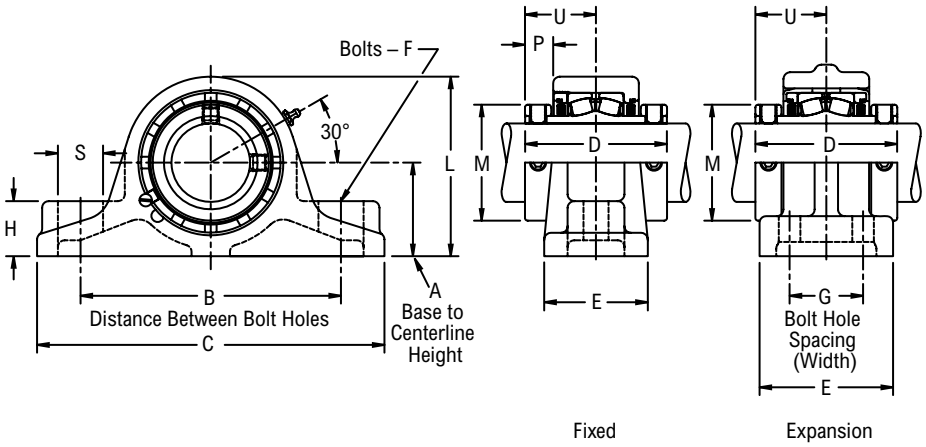

Product Features

- Corrosion-resistant powder coating
- Cast iron housing
- Misalignment capabilities - total of 4°
- Broad range of sealing options
- Factory set clearance & lubrication
- Two hardened spring locking collars
- Field interchangeable seals
- Fixed or Expansion - total of 3/8" expansion
- See Features and Benefits for additional info on pages 132 - 133.

Bearing Dimensions

Size Code	Shaft Diameter	Expansion Part Number	Expansion L	Fixed Part Number	Fixed L	A Base to Centerline Height	B Distance Between Bolt Holes	G Bolt Hole Spacing (Width)	C	D	E	F Bolts	H	M	P	S	U	Approx. Weight
Two-Bolt Pillow Block																		
B524	1 7/16	PEB22523H	4 11/32	PB22523H	3 31/32	2 1/8	5 7/8	-	8 1/8	3 9/16	2 7/16	1/2	1 1/8	2 5/16	11/16	1 1/8	1 25/32	10.00
B528	1 11/16	PEB22527H	4 13/16	PB22527H	4 7/16	2 5/16	6 1/2	-	9	3 13/16	2 13/16	1/2	1 5/16	2 19/32	23/32	1 1/4	1 29/32	12.00
B531	1 15/16	PEB22531H	4 15/16	PB22531H	4 3/4	2 1/2	7	-	9 3/4	3 13/16	2 7/8	5/8	1 7/16	2 7/8	23/32	1 1/4	1 29/32	14.00
B536	2	PEB22532H	5 23/32	PB22532H	5 1/4	2 3/4	7 1/2	-	10 1/4	4 1/8	3 1/8	5/8	1 5/8	3 1/4	25/32	1 1/4	2 1/16	21.00
	2 3/16	PEB22535H		PB22535H														20.00
B540	2 7/16	PEB22539H	6 3/16	PB22539H	5 3/4	3	8 1/4	-	11 1/4	4 3/8	3 3/8	3/4	1 3/4	3 9/16	13/16	1 3/8	2 3/16	24.00
B548	2 11/16	PEB22543H	7 3/16	PB22543H	6 23/32	3 1/2	9 3/4	-	13	4 7/8	3 7/8	7/8	2 1/16	4 1/16	29/32	1 5/8	2 7/16	39.00
	2 15/16	PEB22547H		PB22547H														37.00
Four-Bolt Pillow Block																		
B531	1 15/16	PEB22531FH	4 7/8	PB22531FH	4 7/8	2 1/2	7	2 1/4	9	3 13/16	3 13/16	1/2	1 11/16	2 7/8	23/32	7/8	1 29/32	16.00
B536	2	PEB22532FH	5 15/32	PB22532FH	5 15/32	2 3/4	7 1/2	2 1/4	9 15/16	4 1/8	4	1/2	2	3 1/4	25/32	1 1/8	2 1/16	22.00
	2 3/16	PEB22535FH		PB22535FH														
B540	2 7/16	PEB22539FH	5 7/8	PB22539FH	5 7/8	3	8 5/8	2 5/8	10 5/8	4 3/8	4 3/8	1/2	2 1/8	3 9/16	13/16	1 1/8	2 3/16	26.00
B548	2 11/16	PEB22543FH	6 15/16	PB22543FH	6 15/16	3 1/2	9 3/4	2 3/4	12 5/8	4 7/8	4 3/4	5/8	2 5/16	4 1/16	29/32	1 1/2	2 7/16	38.00
	2 15/16	PEB22547FH		PB22547FH														36.00
B556	3 7/16	PEB22555FH	8	PB22555FH	8	4	11 1/2	3	14 1/4	5 5/16	5	3/4	2 1/2	4 29/32	15/16	1 1/2	2 21/32	56.00
B564	3 15/16	PEB22563FH	8 13/16	PB22563FH	8 13/16	4 7/16	12 1/4	3 3/8	15 5/8	6 1/8	5 5/8	7/8	2 7/8	5 5/8	1 1/16	1 13/16	3 1/16	76.00
	4	PEB22564FH		PB22564FH														
B572	4 3/16	PEB22567YFH	9 3/8	PB22567YFH	9 3/8	4 3/4	13 1/2	2 1/2	16 1/2	6 1/4	4 5/8	3/4	2 3/4	6 3/16	1	1 3/8	3 1/8	92.00
	4 7/16	PEB22571YFH		PB22571YFH														88.00
	4 1/2	PEB22572YFH		PB22572YFH														87.00
	110.00	*PEB225M110YFH*	*238.10*	*PB225M110YFH*	*238.10*	*120.65*	*342.90*	*63.50*	*419.10*	*158.75*	*117.48*	*20.00*	*69.80*	*157.16*	*25.40*	*34.90*	*79.37*	*40.70*
	115.00	*PEB225M115YFH*		*PB225M115YFH*														*39.50*
B580	4 15/16	PEB22579YFH	11 1/8	PB22579YFH	11 1/8	5 1/2	15 1/2	2 3/4	18 1/2	7 7/8	5 9/16	7/8	3	7 1/16	1 5/32	1 1/2	3 15/16	129.00
	5	PEB22580YFH		PB22580YFH														128.00
	125.00	*PEB225M125YFH*	*282.57*	*PB225M125YFH*	*282.57*	*139.70*	*393.70*	*69.80*	*469.90*	*200.02*	*141.34*	*24.00*	*76.20*	*179.38*	*29.37*	*38.10*	*100.01*	*58.10*

Additional Notes

- Please call 1-866-REXNORD for availability
- Lubrication fitting tap size, 1/8" PT
- Base to centerline tolerance, +/-.005" *(+/-0.13 mm)*
- Expansion - is 3/8" for all size codes
- H labyrinth seals standard
- All size codes available with type E lip seals & E7 triple lip seals
- For the Selection Guide, Load Ratings and Speed Limits, see the Link-Belt Spherical Roller Bearings Engineering section on pages 135 - 140.
- Note: Dimensions subject to change. Certified dimensions of ordered material furnished on request.

PB22600, PEB22600

Interchange: *P2BIP, SYR-N, USRB5000A, QVVPL*

Photo Shows a 2-Bolt Spherical Roller Bearing Pillow Block Unit

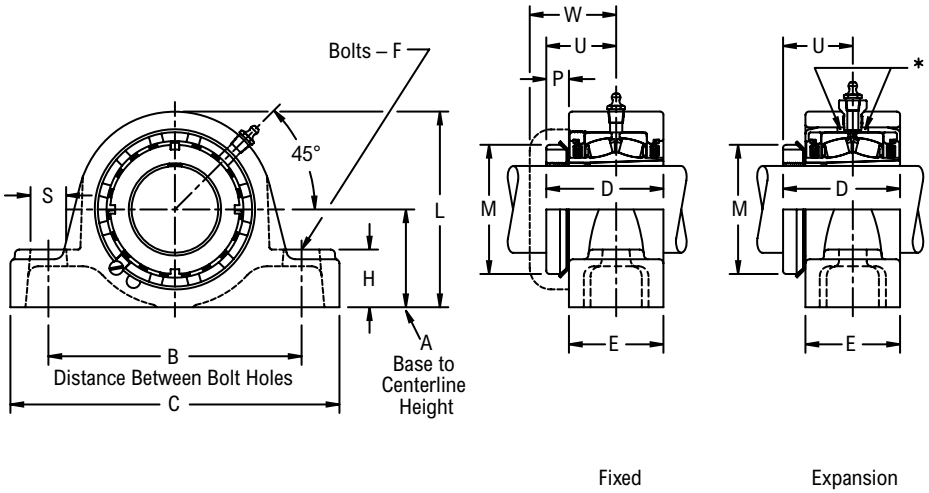

Product Features

- Corrosion-resistant powder coating
- Cast iron housing
- Misalignment capabilities - total of 4°
- Broad range of sealing options
- Factory set clearance & lubrication
- Enhanced life mounting style
- Field interchangeable seals
- Fixed or Expansion - total of 3/8" expansion
- See Features and Benefits for additional info on pages 132 - 133.

Bearing Dimensions

Size Code	Shaft Diameter	Expansion			Fixed			A Base to Centerline Height	B Distance Between Bolt Holes	C	D	E	F Bolts	H	M	P	U	W	Approx. Weight
		Part Number	L	S	Part Number	L	S												
B624	1 7/16	PEB22623H	3 7/8	7/8	PB22623H	3 11/16	13/16	1 7/8	5	6 9/16	2.71	2 1/4	1/2	1 3/16	2 1/4	1/2	1 39/64	2 3/16	7.00
B631	1 15/16	PEB22631H	4 9/16	15/16	PB22631H	4 9/16	15/16	2 1/4	6 1/4	8 1/8	3.08	2 1/2	5/8	1 3/8	2 31/32	39/64	1 55/64	2 9/32	12.00
B635	2 3/16	PEB22635H	5	15/16	PB22635H	5	15/16	2 1/2	6 3/4	8 5/8	3.16	2 9/16	5/8	1 5/8	3 5/32	5/8	1 29/32	2 7/16	14.00
B639	2 7/16	PEB22639H	5 1/2	15/16	PB22639H	5 1/2	15/16	2 3/4	7 1/8	9 1/8	3.28	2 11/16	5/8	1 5/8	3 5/8	45/64	1 31/32	2 9/16	17.00
B647	2 11/16	PEB22643H	6 7/16	1 1/16	PB22643H	6 7/16	1 1/16	3 1/4	8 1/8	10 7/16	3.86	3 3/16	3/4	2	4 5/32	3/4	2 19/64	2 25/32	29.00
	2 15/16	PEB22647H			PB22647H														27.00
B655	3 7/16	PEB22655H	7 1/2	1 5/8	PB22655H	7 1/2	1 5/8	3 3/4	10	13	4.29	3 7/16	7/8	2 1/4	4 15/16	7/8	2 37/64	3	42.00
B663	3 15/16	PEB22663H	8 1/2	2 1/4	PB22663H	8 1/2	2 1/4	4 1/4	11 3/4	15 1/4	4.94	4 3/16	1	2 5/8	5 7/16	15/16	2 15/16	3 7/16	59.00

Additional Notes

- Please call 1-866-REXNORD for availability
- Lubrication fitting tap size, 1/8" PT
- Base to centerline tolerance, +/-.005" *(+/-0.13 mm)*
- Expansion - is 3/8" for all size codes
- Dimensions for "D", "P" & "U" based on unmounted condition
- H labyrinth seals standard
- All size codes available with type E lip seals & E7 triple lip seals
- For the Selection Guide, Load Ratings and Speed Limits, see the Link-Belt Spherical Roller Bearings Engineering section on pages 135 - 140.
- Note: Dimensions subject to change. Certified dimensions of ordered material furnished on request.

PB22600F, PEB22600F

Interchange: *P4BIP, FSYR-N, USRBF5000A, QVVPF, DVPF*

Photo Shows a 4-Bolt Spherical Roller Bearing Pillow Block Unit

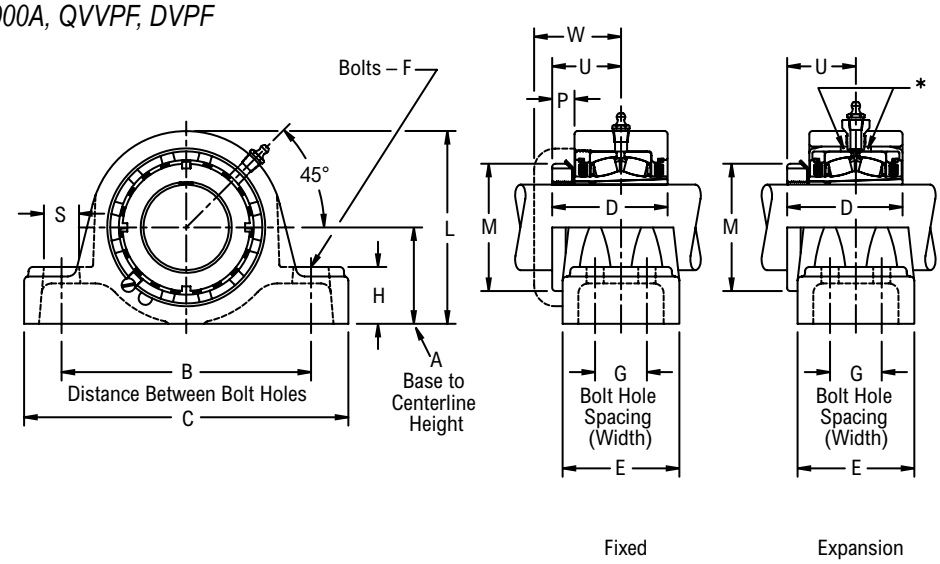

Product Features

- Corrosion-resistant powder coating
- Cast iron housing
- Misalignment capabilities - total of 4°
- Broad range of sealing options
- Factory set clearance & lubrication
- Enhanced life mounting style
- Field interchangeable seals
- Fixed or Expansion - total of 3/8" expansion
- See Features and Benefits for additional info on pages 132 - 133.

Bearing Dimensions

Size Code	Shaft Diameter	Expansion Part Number	Expansion L	Fixed Part Number	Fixed L	A Base to Centerline Height	B Distance Between Bolt Holes	G Bolt Hole Spacing (Width)	C	D	E	F Bolts	H	M	P	S	U	W	Approx. Weight
B631	1 15/16	PEB22631FH	4 9/16	PB22631FH	4 9/16	2 1/4	6 1/4	1 19/32	8 3/8	3.08	3 3/16	1/2	1 3/8	2 31/32	39/64	13/16	1 55/64	2 9/32	13.00
B635	2 3/16	PEB22635FH	5	PB22635FH	5	2 1/2	6 3/4	1 11/16	8 7/8	3.16	3 1/4	1/2	1 5/8	3 5/32	5/8	13/16	1 29/32	2 7/16	15.00
B639	2 7/16	PEB22639FH	5 1/2	PB22639FH	5 1/2	2 3/4	7 1/8	1 3/4	9 1/4	3.28	3 3/8	1/2	1 3/4	3 5/8	5/8	13/16	1 31/32	2 9/16	19.00
B647	2 11/16	PEB22643FH	6 7/16	PB22643FH	6 7/16	3 1/4	8 1/8	1 7/8	10 7/16	3.86	3 3/4	5/8	2 1/4	4 5/32	45/64	15/16	2 19/64	2 25/32	30.00
	2 15/16	PEB22647FH		PB22647FH															29.00
B655	3 7/16	PEB22655FH	7 1/2	PB22655FH	7 1/2	3 3/4	10	2	13	4.29	4 1/8	3/4	2 1/4	4 15/16	55/64	1 1/2	2 37/64	3	43.00
B663	3 15/16	PEB22663FH	8 1/2	PB22663FH	8 1/2	4 1/4	12 1/2	2 1/4	15 1/4	4.94	4 1/2	3/4	2 5/8	5 7/16	15/16	1 1/4	2 15/16	3 7/16	67.00

Additional Notes

- Please call 1-866-REXNORD for availability
- Lubrication fitting tap size, 1/8" PT
- Base to centerline tolerance, +/-.005" *(+/-0.13 mm)*
- Expansion - is 3/8" for all size codes
- Dimensions for "D", "P" & "U" based on unmounted condition
- H labyrinth seals standard
- All size codes available with type E lip seals & E7 triple lip seals
- For the Selection Guide, Load Ratings and Speed Limits, see the Link-Belt Spherical Roller Bearings Engineering section on pages 135 - 140.
- Note: Dimensions subject to change. Certified dimensions of ordered material furnished on request.

PKB22400, PKEB22400

Photo Shows a 2-Bolt Spherical Roller Bearing Pillow Block Unit

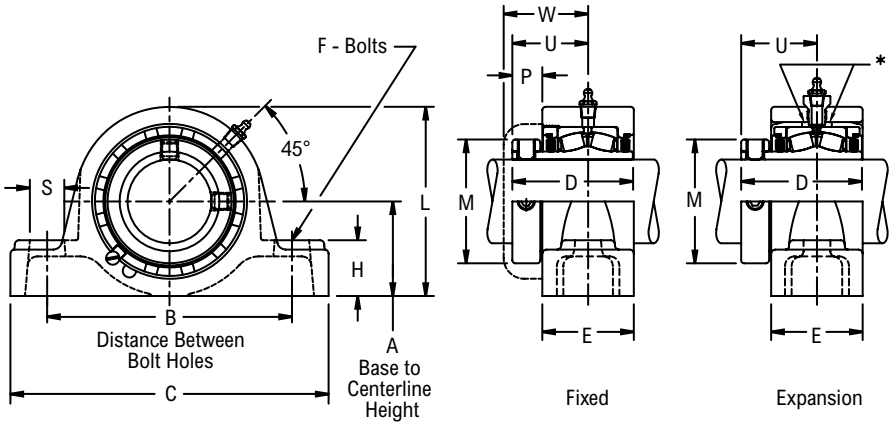

Product Features

- Corrosion-resistant powder coating
- Cast steel housing
- Misalignment capabilities - total of 4°
- Broad range of sealing options
- Factory set clearance & lubrication
- Hardened spring locking collar
- Field interchangeable seals
- Fixed or Expansion - total of 3/8" expansion
- See Features and Benefits for additional info on pages 132 - 133.

Bearing Dimensions

Size Code	Shaft Diameter	Expansion Part Number	Expansion L	Fixed Part Number	Fixed L	A Base to Centerline Height	B Distance Between Bolt Holes	C	D	E	F Bolts	H	M	P	S	U	W	Approx. Weight
B420	1 3/16	-	-	PKB22419H	3 1/2	1 3/4	4 3/4	6 5/16	2 11/16	2 3/16	3/8	1 1/16	1 31/32	17/32	5/8	1 5/8	1 31/32	7.00
	1 1/4	-	-	PKB22420H														
	30.00	*-*	*-*	*PKB224M30H*	*88.90*	*44.45*	*120.60*	*160.30*	*68.26*	*55.60*	*10.00*	*27.00*	*50.00*	*13.50*	*15.90*	*41.30*	*50.00*	*3.20*
B424	1 7/16	PKEB22423H	3 7/8	PKB22423H	3 11/16	1 7/8	5	6 7/8	2 7/8	2 1/4	1/2	1 3/16	2 5/16	21/32	13/16	1 25/32	2 3/16	7.00
	1 1/2	PKEB22424H		PKB22424H														
	35.00	*PKEB224M35H*	*98.40*	*PKB224M35H*	*93.70*	*47.62*	*127.00*	*174.60*	*73.02*	*57.20*	*12.00*	*30.20*	*58.70*	*16.70*	*20.60*	*45.20*	*55.60*	*3.40*
B428	1 5/8	PKEB22426H	4 3/8	PKB22426H	4 1/4	2 1/8	5 1/2	7 1/8	3 1/8	2 1/2	1/2	1 5/16	2 19/32	21/32	13/16	1 29/32	2 1/4	10.00
	1 11/16	PKEB22427H		PKB22427H														
	1 3/4	PKEB22428H		PKB22428H														
	40.00	*PKEB224M40H*	*111.10*	*PKB224M40H*	*108.00*	*53.98*	*139.70*	*187.30*	*79.38*	*63.50*	*12.00*	*33.30*	*65.90*	*16.70*	*20.60*	*48.40*	*57.20*	*4.80*
B432	1 15/16	PKEB22431H	4 9/16	PKB22431H	4 9/16	2 1/4	6 1/4	8 3/8	3 1/8	2 1/2	5/8	1 3/8	2 7/8	21/32	15/16	1 29/32	2 9/32	12.00
	2	PKEB22432H		PKB22432H														
	45.00	*PKEB224M45H*	*115.90*	*PKB224M45H*	*115.90*	*57.15*	*158.80*	*212.70*	*79.38*	*63.50*	*16.00*	*34.90*	*73.00*	*16.70*	*23.80*	*48.40*	*57.90*	*5.80*
	50.00	*PKEB224M50H*		*PKB224M50H*														*5.50*
B436	2 3/16	PKEB22435H	5	PKB22435H	5	2 1/2	6 3/4	8 7/8	3 5/16	2 9/16	5/8	1 5/8	3 1/4	25/32	15/16	2 1/16	2 7/16	16.00
	2 1/4	PKEB22436H		PKB22436H														
	55.00	*PKEB224M55H*	*127.00*	*PKB224M55H*	*127.00*	*63.50*	*171.40*	*225.40*	*84.14*	*65.10*	*16.00*	*41.30*	*82.60*	*19.80*	*23.80*	*52.40*	*61.90*	*7.10*
B440	2 7/16	PKEB22439H	5 1/2	PKB22439H	5 1/2	2 3/4	7 1/8	9 1/4	3 1/2	2 11/16	5/8	1 3/4	3 9/16	27/32	15/16	2 3/16	2 9/16	19.00
	2 1/2	PKEB22440H		PKB22440H														18.00
	60.00	*PKEB224M60H*	*139.70*	*PKB224M60H*	*139.70*	*69.85*	*181.00*	*235.00*	*88.90*	*68.30*	*16.00*	*44.40*	*90.50*	*21.40*	*23.80*	*55.60*	*65.10*	*8.60*
B448	2 11/16	PKEB22443H	6 7/16	PKB22443H	6 7/16	3 1/4	8 1/8	10 7/16	4	3 3/16	3/4	2 1/4	4 1/16	27/32	1 1/16	2 7/16	2 25/32	30.00
	2 3/4	PKEB22444H		PKB22444H														
	2 15/16	PKEB22447H		PKB22447H														29.00
	3	PKEB22448H		PKB22448H														28.00
	65.00	*PKEB224M65H*	*163.50*	*PKB224M65H*	*163.50*	*82.55*	*206.40*	*265.10*	*101.60*	*81.00*	*20.00*	*57.20*	*103.20*	*21.40*	*27.00*	*61.90*	*70.60*	*13.70*
	70.00	*PKEB224M70H*		*PKB224M70H*														*13.50*
	75.00	*PKEB224M75H*		*PKB224M75H*														*13.00*
B456	3 3/16	PKEB22451H	7 1/2	PKB22451H	7 1/2	3 3/4	10	13	4 3/8	3 7/16	7/8	2 1/4	4 29/32	15/16	1 5/8	2 21/32	3	45.00
	3 7/16	PKEB22455H		PKB22455H														43.00
	3 1/2	PKEB22456H		PKB22456H														
	80.00	*PKEB224M80H*	*190.50*	*PKB224M80H*	*190.50*	*95.25*	*254.00*	*330.20*	*111.12*	*87.30*	*24.00*	*57.20*	*124.60*	*23.80*	*41.30*	*67.50*	*76.20*	*20.20*
	85.00	*PKEB224M85H*		*PKB224M85H*														*19.70*
B464	3 11/16	PKEB22459H	8 1/2	PKB22459H	8 1/2	4 1/4	11 3/4	15 1/4	5 1/16	4 3/16	1	2 5/8	5 5/8	1 1/16	2 1/4	3 1/16	3 7/16	64.00
	3 15/16	PKEB22463H		PKB22463H														62.00

Continued...

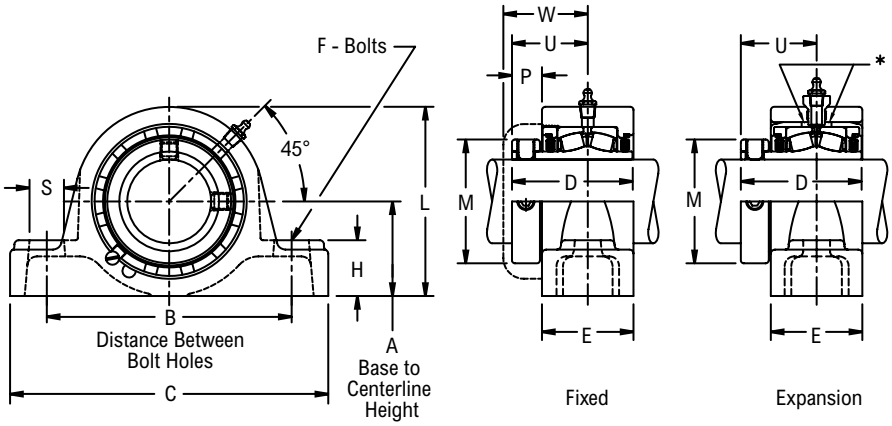

Continued...

Bearing Dimensions

Size Code	Shaft Diameter	Expansion		Fixed		A Base to Centerline Height	B Distance Between Bolt Holes	C	D	E	F Bolts	H	M	P	S	U	W	Approx. Weight
		Part Number	L	Part Number	L													
B464	4	PKEB22464H	8 1/2	PKB22464H	8 1/2	4 1/4	11 3/4	15 1/4	5 1/16	4 3/16	1	2 5/8	5 5/8	1 1/16	2 1/4	3 1/16	3 7/16	62.00
	90.00	*PKEB224M90H*	*215.90*	*PKB224M90H*	*215.90*	*107.95*	*298.40*	*387.40*	*128.59*	*106.4*	*24.00*	*66.70*	*142.90*	*27.00*	*57.20*	*77.80*	*87.30*	*29.90*
	100.00	*PKEB224M100H*		*PKB224M100H*														*28.10*

Additional Notes

Please call 1-866-REXNORD for availability
Lubrication fitting tap size, 1/8" PT
Base to centerline tolerance, +/-.005" *(+/-0.13 mm)*
Expansion - is 3/8" for all size codes
H labyrinth seals standard

All size codes available with type E lip seals & E7 triple lip seals
For the Selection Guide, Load Ratings and Speed Limits, see the Link-Belt Spherical Roller Bearings Engineering section on pages 135 - 140.
Note: Dimensions subject to change. Certified dimensions of ordered material furnished on request.

PKB22400F, PKEB22400F

Photo Shows a 4-Bolt Spherical Roller Bearing Pillow Block Unit

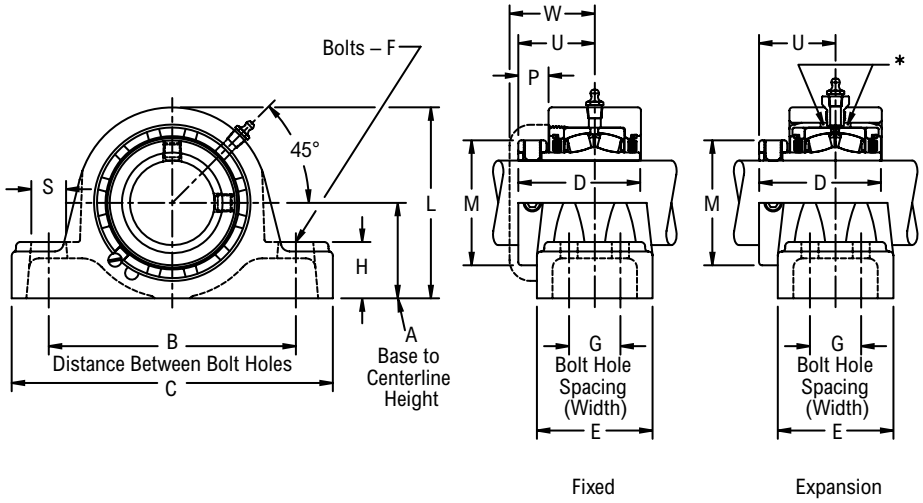

Product Features

- Corrosion-resistant powder coating
- Cast steel housing
- Misalignment capabilities - total of 4°
- Broad range of sealing options
- Factory set clearance & lubrication
- Hardened spring locking collar
- Field interchangeable seals
- Fixed or Expansion - total of 3/8" expansion
- See Features and Benefits for additional info on pages 132 - 133.

Bearing Dimensions

Size Code	Shaft Diameter	Expansion Part Number	Fixed Part Number	A Base to Centerline Height	B Distance Between Bolt Holes	G Bolt Hole Spacing (Width)	C	D	E	F Bolts	H	L	M	P	S	U	W	Approx. Weight
B432	1 15/16	PKEB22431FH	PKB22431FH	2 1/4	6 1/4	1 19/32	8 3/8	3 1/8	3 3/16	1/2	1 3/8	4 9/16	2 7/8	21/32	13/16	1 29/32	2 9/32	13.00
	2	PKEB22432FH	PKB22432FH															
	45.00	*PKEB224M45FH*	*PKB224M45FH*	*57.15*	*158.80*	*40.50*	*212.70*	*79.38*	*81.00*	*12.00*	*34.90*	*115.90*	*73.00*	*16.70*	*20.60*	*48.40*	*57.90*	*6.10*
	50.00	*PKEB224M50FH*	*PKB224M50FH*															*5.80*
B436	2 3/16	PKEB22435FH	PKB22435FH	2 1/2	6 3/4	1 11/16	8 7/8	3 5/16	3 1/4	1/2	1 5/8	5	3 1/4	25/32	13/16	2 1/16	2 7/16	16.00
	2 1/4	PKEB22436FH	PKB22436FH															
	55.00	*PKEB224M55FH*	*PKB224M55FH*	*63.50*	*171.40*	*42.90*	*225.40*	*84.14*	*82.60*	*12.00*	*41.30*	*127.00*	*82.60*	*19.80*	*20.60*	*52.40*	*61.90*	*7.30*
B440	2 7/16	PKEB22439FH	PKB22439FH	2 3/4	7 1/8	1 3/4	9 1/4	3 1/2	3 3/8	1/2	1 3/4	5 1/2	3 9/16	27/32	13/16	2 3/16	2 9/16	20.00
	2 1/2	PKEB22440FH	PKB22440FH															
	60.00	*PKEB224M60FH*	*PKB224M60FH*	*69.85*	*181.00*	*44.40*	*235.00*	*88.90*	*85.70*	*12.00*	*44.40*	*139.70*	*90.50*	*21.40*	*20.60*	*55.60*	*65.10*	*9.30*
B448	2 11/16	PKEB22443FH	PKB22443FH	3 1/4	8 1/8	1 7/8	10 7/16	4	3 3/4	5/8	2 1/4	6 7/16	4 1/16	27/32	15/16	2 7/16	2 25/32	30.00
	2 3/4	PKEB22444FH	PKB22444FH															
	2 15/16	PKEB22447FH	PKB22447FH															29.00
	3	PKEB22448FH	PKB22448FH															28.00
	65.00	*PKEB224M65FH*	*PKB224M65FH*	*82.55*	*206.40*	*47.60*	*265.10*	*101.60*	*95.20*	*16.00*	*57.20*	*163.50*	*103.20*	*21.40*	*23.80*	*61.90*	*70.60*	*13.70*
	70.00	*PKEB224M70FH*	*PKB224M70FH*															*13.50*
	75.00	*PKEB224M75FH*	*PKB224M75FH*															*13.00*
B456	3 3/16	PKEB22451FH	PKB22451FH	3 3/4	10	2	13	4 3/8	4 1/8	3/4	2 1/4	7 1/2	4 29/32	15/16	1 1/2	2 21/32	3	49.00
	3 7/16	PKEB22455FH	PKB22455FH															47.00
	3 1/2	PKEB22456FH	PKB22456FH															
	80.00	*PKEB224M80FH*	*PKB224M80FH*	*95.25*	*254.00*	*50.80*	*330.20*	*111.12*	*104.80*	*20.00*	*57.20*	*190.50*	*124.60*	*23.80*	*38.10*	*67.50*	*76.20*	*22.00*
	85.00	*PKEB224M85FH*	*PKB224M85FH*															*21.50*
B464	3 11/16	PKEB22459FH	PKB22459FH	4 1/4	12 1/2	2 1/4	15 1/4	5 1/16	4 1/2	3/4	2 5/8	8 1/2	5 5/8	1 1/16	1 1/4	3 1/16	3 7/16	76.00
	3 15/16	PKEB22463FH	PKB22463FH															74.00
	4	PKEB22464FH	PKB22464FH															73.00
	90.00	*PKEB224M90FH*	*PKB224M90FH*	*107.95*	*317.50*	*57.20*	*387.40*	*128.59*	*114.30*	*20.00*	*66.70*	*215.90*	*142.90*	*27.00*	*31.80*	*77.80*	*87.30*	*35.20*
	100.00	*PKEB224M100FH*	*PKB224M100FH*															*33.50*

Additional Notes

- Please call 1-866-REXNORD for availability
- Lubrication fitting tap size, 1/8" PT
- Base to centerline tolerance, +/-.005" *(+/-0.13 mm)*
- Expansion - is 3/8" for all size codes
- H labyrinth seals standard
- All size codes available with type E lip seals & E7 triple lip seals

For the Selection Guide, Load Ratings and Speed Limits, see the Link-Belt Spherical Roller Bearings Engineering section on pages 135 - 140.

Note: Dimensions subject to change. Certified dimensions of ordered material furnished on request.

PKB22500F, PKEB22500F

Photo Shows a 4-Bolt Spherical Roller Bearing Pillow Block Unit

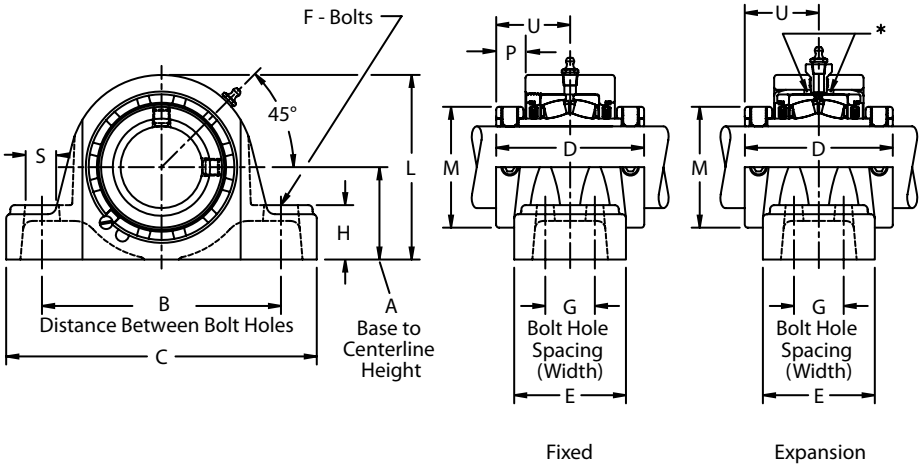

Product Features

- Corrosion-resistant powder coating
- Cast steel housing
- Misalignment capabilities - total of 4°
- Broad range of sealing options
- Factory set clearance & lubrication
- Two hardened spring locking collars
- Field interchangeable seals
- Fixed or Expansion - total of 3/8" expansion
- See Features and Benefits for additional info on pages 132 - 133.

Bearing Dimensions

Size Code	Shaft Diameter	Expansion Part Number	Fixed Part Number	A Base to Centerline Height	B Distance Between Bolt Holes	G Bolt Hole Spacing (Width)	C	D	E	F Bolts	H	L	M	P	S	U	Approx. Weight
B572	4 3/16	PKEB22567YFH	PKB22567YFH	4 3/4	13 1/2	2 1/2	16 1/2	6 1/4	4 3/4	3/4	2 3/4	10	6 3/16	1	1 29/64	3 1/8	97.00
	4 7/16	PKEB22571YFH	PKB22571YFH														93.00
	4 1/2	PKEB22572YFH	PKB22572YFH														92.00
	110.00	*PKEB225M110YFH*	*PKB225M110YFH*	*120.65*	*342.90*	*63.50*	*419.10*	*158.75*	*120.60*	*20.00*	*69.80*	*254.00*	*157.16*	*25.4*	*36.90*	*79.50*	*43.00*
	115.00	*PKEB225M115YFH*	*PKB225M115YFH*														*41.70*
B580	4 15/16	PKEB22579YFH	PKB22579YFH	5 1/2	15 1/2	2 3/4	18 1/2	7 7/8	6 3/8	7/8	3	11 23/32	7 1/16	1 5/32	1 9/16	3 15/16	125.00
	5	PKEB22580YFH	PKB22580YFH														124.00
	125.00	*PKEB225M125YFH*	*PKB225M125YFH*	*139.70*	*393.70*	*69.80*	*469.90*	*200.02*	*161.93*	*24.00*	*76.20*	*297.66*	*179.38*	*29.37*	*39.69*	*100.01*	*56.60*

Additional Notes

- Please call 1-866-REXNORD for availability
- Lubrication fitting tap size, 1/8" PT
- Base to centerline tolerance, +/-.005" *(+/-0.13 mm)*
- Expansion - is 3/8" for all size codes
- H labyrinth seals standard
- All size codes available with type E lip seals & E7 triple lip seals
- For the Selection Guide, Load Ratings and Speed Limits, see the Link-Belt Spherical Roller Bearings Engineering section on pages 135 - 140.
- Note: Dimensions subject to change. Certified dimensions of ordered material furnished on request.

PKB22600, PKEB22600

Photo Shows a 2-Bolt Spherical Roller Bearing Pillow Block Unit

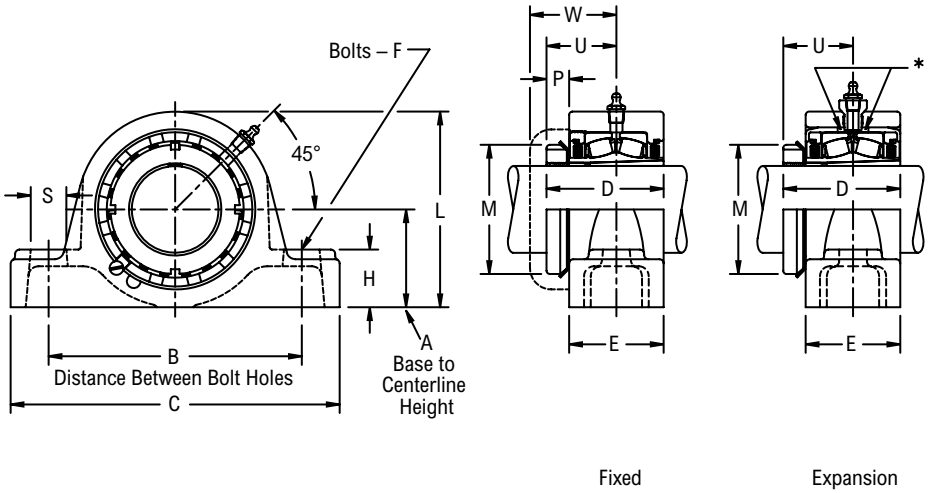

Product Features

- Corrosion-resistant powder coating
- Cast steel housing
- Misalignment capabilities - total of 4°
- Broad range of sealing options
- Factory set clearance & lubrication
- Enhanced life mounting style
- Field interchangeable seals
- Fixed or Expansion - total of 3/8" expansion
- See Features and Benefits for additional info on pages 132 - 133.

Bearing Dimensions

Size Code	Shaft Diameter	Expansion		Fixed		A Base to Centerline Height	B Distance Between Bolt Holes	C	D	E	F Bolts	H	M	P	U	S	W	Approx. Weight
		Part Number	L	Part Number	L													
B624	1 7/16	PKEB22623H	3 7/8	PKB22623H	3 11/16	1 7/8	5	6 7/8	2.71	2 1/4	1/2	1 3/16	2 1/4	1/2	1 39/64	13/16	2 3/16	7.00
B631	1 15/16	PKEB22631H	4 9/16	PKB22631H	4 9/16	2 1/4	6 1/4	8 3/8	3.08	2 1/2	5/8	1 3/8	2 31/32	39/64	1 55/64	15/16	2 9/32	12.00
B635	2 3/16	PKEB22635H	5	PKB22635H	5	2 1/2	6 3/4	8 7/8	3.16	2 9/16	5/8	1 5/8	3 5/32	5/8	1 29/32	15/16	2 7/16	16.00
B639	2 7/16	PKEB22639H	5 1/2	PKB22639H	5 1/2	2 3/4	7 1/8	9 1/4	3.28	2 11/16	5/8	1 3/4	3 5/8	45/64	1 31/32	15/16	2 9/16	18.00
B647	2 11/16	PKEB22643H	6 7/16	PKB22643H	6 7/16	3 1/4	8 1/8	10 7/16	3.86	3 3/16	3/4	2 1/4	4 5/32	55/64	2 19/64	1 1/16	2 25/32	30.00
	2 15/16	PKEB22647H		PKB22647H														29.00
B655	3 7/16	PKEB22655H	7 1/2	PKB22655H	7 1/2	3 3/4	10	13	4.29	3 7/16	7/8	2 1/4	4 15/16	7/8	2 37/64	1 5/8	3	43.00
B663	3 15/16	PKEB22663H	8 1/2	PKB22663H	8 1/2	4 1/4	11 3/4	15 1/4	4.94	4 3/16	1	2 5/8	5 7/16	1 5/16	2 15/16	2 1/4	3 7/16	62.00

Additional Notes

- Please call 1-866-REXNORD for availability
- Lubrication fitting tap size, 1/8" PT
- Base to centerline tolerance, +/-.005" *(+/-0.13 mm)*
- Expansion - is 3/8" for all size codes
- Dimensions for "D", "P" & "U" based on unmounted condition
- H labyrinth seals standard
- All size codes available with type E lip seals & E7 triple lip seals
- For the Selection Guide, Load Ratings and Speed Limits, see the Link-Belt Spherical Roller Bearings Engineering section on pages 135 - 140.
- Note: Dimensions subject to change. Certified dimensions of ordered material furnished on request.

PKB22600F, PKEB22600F

Photo Shows a 4-Bolt Spherical Roller Bearing Pillow Block Unit

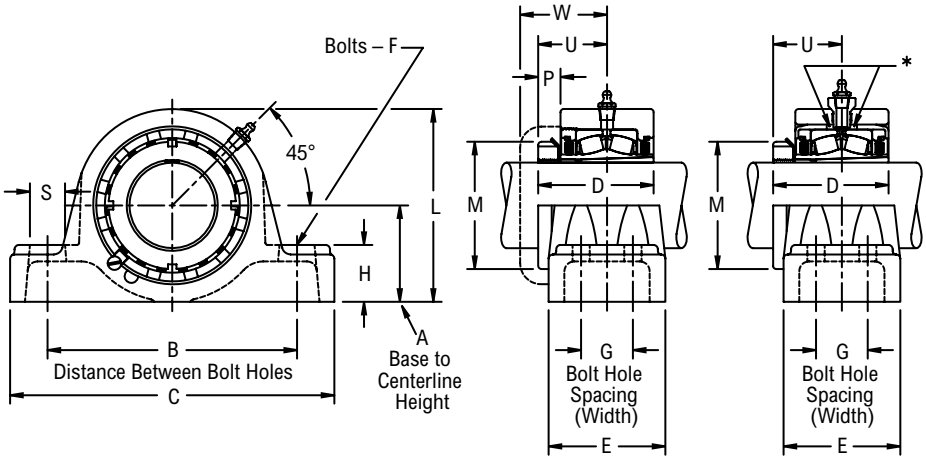

Fixed

Expansion

Product Features

- Corrosion-resistant powder coating
- Cast steel housing
- Misalignment capabilities - total of 4°
- Broad range of sealing options
- Factory set clearance & lubrication
- Enhanced life mounting style
- Field interchangeable seals
- Fixed or Expansion - total of 3/8" expansion
- See Features and Benefits for additional info on pages 132 - 133.

Bearing Dimensions

Size Code	Shaft Diameter	Expansion Part Number	Fixed Part Number	A Base to Centerline Height	B Distance Between Bolt Holes	G Bolt Hole Spacing (Width)	C	D	E	F Bolts	H	L	M	P	S	U	W	Approx. Weight
B631	1 15/16	PKEB22631FH	PKB22631FH	2 1/4	6 1/4	1 19/32	8 3/8	3.08	3 3/16	1/2	1 3/8	4 9/16	2 31/32	39/64	13/16	1 55/64	2 9/32	13.00
B635	2 3/16	PKEB22635FH	PKB22635FH	2 1/2	6 3/4	1 11/16	8 7/8	3.16	3 1/4	1/2	1 5/8	5	3 5/32	5/8	13/16	1 29/32	2 7/16	16.00
B639	2 7/16	PKEB22639FH	PKB22639FH	2 3/4	7 1/8	1 3/4	9 1/4	3.28	3 3/8	1/2	1 3/4	5 1/2	3 5/8	5/8	13/16	1 31/32	2 9/16	20.00
B647	2 11/16	PKEB22643FH	PKB22643FH	3 1/4	8 1/8	1 7/8	10 7/16	3.86	3 3/4	5/8	2 1/4	6 7/16	4 5/32	45/64	15/16	2 19/64	2 25/32	30.00
	2 15/16	PKEB22647FH	PKB22647FH															29.00
B655	3 7/16	PKEB22655FH	PKB22655FH	3 3/4	10	2	13	4.29	4 1/8	3/4	2 1/4	7 1/2	4 15/16	55/64	1 1/2	2 37/64	3	47.00
B663	3 15/16	PKEB22663FH	PKB22663FH	4 1/4	12 1/2	2 1/4	15 1/4	4.94	4 1/2	3/4	2 5/8	8 1/2	5 7/16	15/16	1 1/4	2 15/16	3 7/16	74.00

Additional Notes

- Please call 1-866-REXNORD for availability
- Lubrication fitting tap size, 1/8" PT
- Base to centerline tolerance, +/-.005" *(+/-0.13 mm)*
- Expansion - is 3/8" for all size codes
- Dimensions for “D”, “P” & “U” based on unmounted condition
- H labyrinth seals standard
- All size codes available with type E lip seals & E7 triple lip seals
- For the Selection Guide, Load Ratings and Speed Limits, see the Link-Belt Spherical Roller Bearings Engineering section on pages 135 - 140.
- Note: Dimensions subject to change. Certified dimensions of ordered material furnished on request.

EPB22400, EPEB22400

Interchange: *EP2BS2, P2BE, SYE, USRBE5000, (E)RPBA, QAP, EP2BTRB*

Photo Shows a 2-Bolt Spherical Roller Bearing Pillow Block Unit

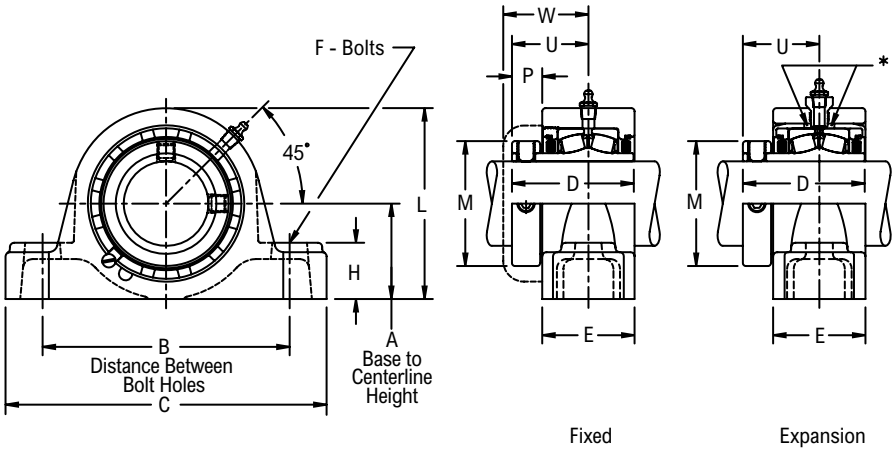

Product Features

- Self-aligning type E interchange
- Corrosion-resistant powder coating
- Cast iron housing
- Misalignment capabilities - total of 4°
- Broad range of sealing options
- Factory set clearance & lubrication
- Hardened spring locking collar
- Field interchangeable seals
- Fixed or Expansion - total of 3/8" expansion
- See Features and Benefits for additional info on pages 132 - 133.

Bearing Dimensions

Size Code	Shaft Diameter	Expansion Part Number	Fixed Part Number	A Base to Centerline Height	B Distance Between Bolt Holes Min	B Distance Between Bolt Holes Max	C	D	E	F Bolts	H	L	M	P	U	W	Approx. Weight
B424	1 7/16	EPEB22423H	EPB22423H	1 7/8	4 3/4	6	7 3/8	2 7/8	2 1/4	1/2	1 1/8	3 7/8	2 5/16	21/32	1 25/32	2 3/16	8.00
	35.00	*EPEB224M35H*	*EPB224M35H*	*47.62*	*120.60*	*152.40*	*187.30*	*73.02*	*57.20*	*12.00*	*28.60*	*98.40*	*58.70*	*16.70*	*45.20*	*55.60*	*3.10*
B428	1 1/2	EPEB224B24H	EPB224B24H	2 1/8	5 1/4	6 1/2	7 7/8	3 1/8	2 1/2	1/2	1 1/4	4 3/8	2 19/32	21/32	1 29/32	2 1/4	11.00
	1 5/8	EPEB22426H	EPB22426H														
	1 11/16	EPEB22427H	EPB22427H														
	40.00	*EPEB224M40H*	*EPB224M40H*	*53.98*	*133.40*	*165.10*	*200.00*	*79.38*	*63.50*	*12.00*	*31.80*	*111.10*	*65.90*	*16.70*	*48.40*	*57.20*	*5.40*
B432	1 3/4	EPEB224B28H	EPB224B28H	2 1/4	6 1/16	7 1/4	8 7/8	3 1/8	2 1/2	5/8	1 5/16	4 9/16	2 7/8	21/32	1 29/32	2 9/32	12.00
	1 15/16	EPEB22431H	EPB22431H														
	2	EPEB22432H	EPB22432H														
	45.00	*EPEB224M45H*	*EPB224M45H*	*57.15*	*154.00*	*184.20*	*225.40*	*79.38*	*63.50*	*16.00*	*33.30*	*115.90*	*73.00*	*16.70*	*48.40*	*57.90*	*5.50*
	50.00	*EPEB224M50H*	*EPB224M50H*														*5.20*
B436	2 3/16	EPEB22435H	EPB22435H	2 1/2	6 9/16	8	9 5/8	3 5/16	2 9/16	5/8	1 1/2	5	3 1/4	25/32	2 1/16	2 7/16	15.00
	55.00	*EPEB224M55H*	*EPB224M55H*	*63.50*	*166.70*	*203.20*	*244.50*	*84.14*	*65.10*	*16.00*	*38.10*	*127.00*	*82.60*	*19.80*	*52.40*	*61.90*	*6.60*
B440	2 1/4	EPEB224B36H	EPB224B36H	2 3/4	6 15/16	8 3/4	10 1/2	3 1/2	2 11/16	5/8	1 5/8	5 1/2	3 9/16	27/32	2 3/16	2 9/16	17.00
	2 7/16	EPEB22439H	EPB22439H														
	2 1/2	EPEB22440H	EPB22440H														
	60.00	*EPEB224M60H*	*EPB224M60H*	*69.85*	*176.20*	*222.20*	*266.70*	*88.90*	*68.30*	*16.00*	*41.30*	*139.70*	*90.50*	*21.40*	*55.60*	*65.10*	*8.20*
B448	2 11/16	EPEB22443H	EPB22443H	3 1/8	7 13/16	9 3/4	11 13/16	4	3 3/16	3/4	1 7/8	6 5/16	4 1/16	27/32	2 7/16	2 25/32	28.00
	2 3/4	EPEB22444H	EPB22444H														
	2 15/16	EPEB22447H	EPB22447H														
	3	EPEB22448H	EPB22448H														
	65.00	*EPEB224M65H*	*EPB224M65H*	*79.38*	*198.40*	*247.60*	*300.00*	*101.60*	*81.00*	*20.00*	*47.60*	*160.30*	*103.20*	*21.40*	*61.90*	*70.60*	*13.50*
	70.00	*EPEB224M70H*	*EPB224M70H*														*13.30*
	75.00	*EPEB224M75H*	*EPB224M75H*														*12.80*
B456	3 3/16	EPEB22451H	EPB22451H	3 3/4	9 5/16	11 5/16	13 13/16	4 3/8	3 1/2	7/8	2 1/4	7 1/2	4 29/32	15/16	2 21/32	3	43.00
	3 7/16	EPEB22455H	EPB22455H														
	3 1/2	EPEB22456H	EPB22456H														
	80.00	*EPEB224M80H*	*EPB224M80H*	*95.25*	*236.50*	*287.30*	*350.80*	*111.12*	*88.90*	*24.00*	*57.20*	*190.50*	*124.60*	*23.80*	*67.50*	*76.20*	*20.00*
	85.00	*EPEB224M85H*	*EPB224M85H*														*19.50*

Additional Notes

- Please call 1-866-REXNORD for availability
- Lubrication fitting tap size, 1/8" PT
- Base to centerline tolerance, +/-.005" *(+/-0.13 mm)*
- Expansion - is 3/8" for all size codes
- H labyrinth seals standard
- All size codes available with type E lip seals & E7 triple lip seals

For the Selection Guide, Load Ratings and Speed Limits, see the Link-Belt Spherical Roller Bearings Engineering section on pages 135 - 140.

Note: Dimensions subject to change. Certified dimensions of ordered material furnished on request.

EPB22400F, EPEB22400F

Interchange: *EP4BS2, P4BE, FSYE, (E)RPBA, QAPR, EP4BTRB*

Photo Shows a 4-Bolt Spherical Roller Bearing Pillow Block Unit

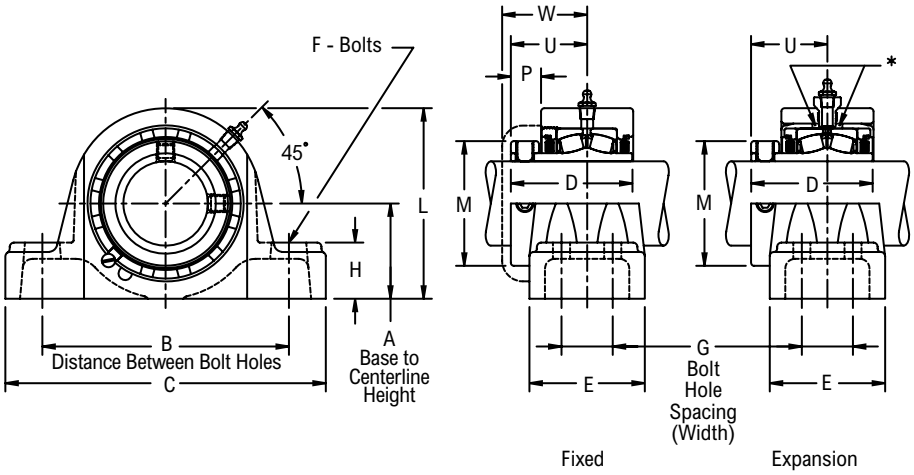

Product Features

- Self-aligning type E interchange
- Corrosion-resistant powder coating
- Cast iron housing
- Misalignment capabilities - total of 4°
- Broad range of sealing options
- Factory set clearance & lubrication
- Hardened spring locking collar
- Field interchangeable seals
- Fixed or Expansion - total of 3/8" expansion
- See Features and Benefits for additional info on pages 132 - 133.

Bearing Dimensions

Size Code	Shaft Diameter	Expansion Part Number	Fixed Part Number	A Base to Centerline Height	B Distance Between Bolt Holes Min	B Distance Between Bolt Holes Max	G Bolt Hole Spacing (Width)	C	D	E	F Bolts	H	L	M	P	U	W	Approx. Weight
B440	2 1/4	EPEB224B36FH	EPB224B36FH	2 3/4	6 15/16	8 3/4	1 7/8	10 1/2	3 1/2	3 5/8	5/8	1 5/8	5 1/2	3 9/16	27/32	2 3/16	2 9/16	21.00
	2 7/16	EPEB22439FH	EPB22439FH															20.00
	2 1/2	EPEB22440FH	EPB22440FH															
	60.00	*EPEB224M60FH*	*EPB224M60FH*	*69.85*	*176.20*	*222.20*	*47.60*	*266.70*	*88.90*	*92.10*	*16.00*	*41.30*	*139.70*	*90.50*	*21.4*	*55.60*	*65.1*	*8.80*
B448	2 11/16	EPEB22443FH	EPB22443FH	3 1/8	7 13/16	9 7/8	2 1/8	11 13/16	4	4 1/4	5/8	1 7/8	6 5/16	4 1/16	27/32	2 7/16	2 25/32	31.00
	2 3/4	EPEB22444FH	EPB22444FH															
	2 15/16	EPEB22447FH	EPB22447FH															29.00
	3	EPEB22448FH	EPB22448FH															
	65.00	*EPEB224M65FH*	*EPB224M65FH*	*79.38*	*198.40*	*250.80*	*54.00*	*300.00*	*101.60*	*108.00*	*16.00*	*47.60*	*160.30*	*103.20*	*21.4*	*61.90*	*70.6*	*14.00*
	70.00	*EPEB224M70FH*	*EPB224M70FH*															*13.80*
	75.00	*EPEB224M75FH*	*EPB224M75FH*															*13.30*
B456	3 3/16	EPEB22451FH	EPB22451FH	3 3/4	9 5/16	11 5/16	2 3/8	13 13/16	4 3/8	4 3/4	3/4	2 1/4	7 1/2	4 29/32	15/16	2 21/32	3	47.00
	3 7/16	EPEB22455FH	EPB22455FH															46.00
	3 1/2	EPEB22456FH	EPB22456FH															45.00
	80.00	*EPEB224M80FH*	*EPB224M80FH*	*95.25*	*236.50*	*290.50*	*60.30*	*350.80*	*111.12*	*120.60*	*20.00*	*57.20*	*190.50*	*124.60*	*23.8*	*67.50*	*76.2*	*21.30*
	85.00	*EPEB224M85FH*	*EPB224M85FH*															*20.80*
B464	3 11/16	EPEB22459FH	EPB22459FH	4 1/4	11 7/8	13	2 1/4	15 1/4	5 1/16	4 1/2	3/4	2 5/8	8 1/2	5 5/8	1 1/16	3 1/16	3 7/16	69.00
	3 15/16	EPEB22463FH	EPB22463FH															67.00
	4	EPEB22464FH	EPB22464FH															66.00
	90.00	*EPEB224M90FH*	*EPB224M90FH*	*107.95*	*301.60*	*330.20*	*57.20*	*387.40*	*128.59*	*114.30*	*20.00*	*66.70*	*215.90*	*142.90*	*27.0*	*77.80*	*87.3*	*32.10*
	100.00	*EPEB224M100FH*	*EPB224M100FH*															*30.30*

Additional Notes

- Please call 1-866-REXNORD for availability
- Lubrication fitting tap size, 1/8" PT
- Base to centerline tolerance, +/-.005" *(+/-0.13 mm)*
- Expansion - is 3/8" for all size codes
- H labyrinth seals standard
- All size codes available with type E lip seals & E7 triple lip seals

For the Selection Guide, Load Ratings and Speed Limits, see the Link-Belt Spherical Roller Bearings Engineering section on pages 135 - 140.

Note: Dimensions subject to change. Certified dimensions of ordered material furnished on request.

EPB22500, EPEB22500, EPB22500F, EPEB22500F

Interchange: *(E)RPB, QAAP(F), QAAPR*

Photo Shows a 2-Bolt Spherical Roller Bearing Pillow Block Unit

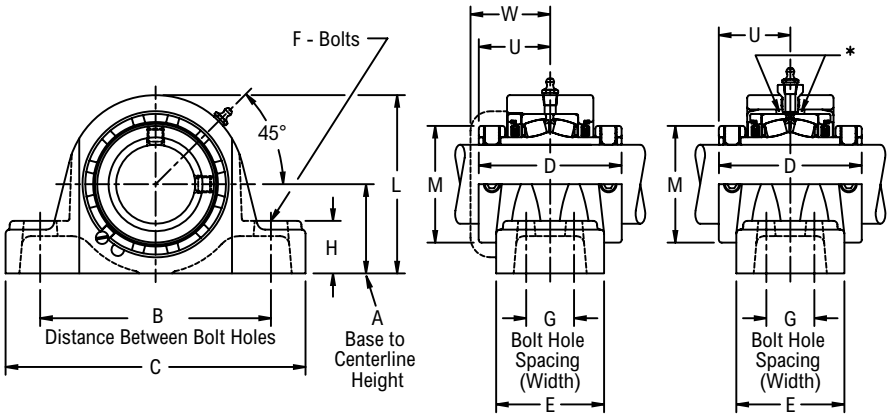

Product Features

- Self-aligning type E interchange
- Corrosion-resistant powder coating
- Cast iron housing
- Misalignment capabilities - total of 4°
- Broad range of sealing options
- Factory set clearance & lubrication
- Two hardened spring locking collars
- Field interchangeable seals
- Fixed or Expansion - total of 3/8" expansion
- See Features and Benefits for additional info on pages 132 - 133.

Bearing Dimensions

Size Code	Shaft Diameter	Expansion Part Number	Fixed Part Number	A Base to Centerline Height	B Distance Between Bolt Holes Min	B Distance Between Bolt Holes Max	G Bolt Hole Spacing (Width)	C	D	E	F Bolts	H	L	M	U	W	Approx. Weight
Two-Bolt Pillow Block																	
B524	1 7/16	EPEB22523H	EPB22523H	1 7/8	4 3/4	6	-	7 3/8	3 9/16	2 1/4	1/2	1 1/8	3 7/8	2 5/16	1 25/32	2 3/16	8.00
B528	1 11/16	EPEB22527H	EPB22527H	2 1/8	5 1/2	6 1/2	-	7 7/8	3 13/16	2 1/2	1/2	1 1/4	4 3/8	2 19/32	1 29/32	2 1/4	12.00
B531	1 15/16	EPEB22531H	EPB22531H	2 1/4	6 1/16	7 1/4	-	8 7/8	3 13/16	2 1/2	5/8	1 5/16	4 9/16	2 7/8	1 29/32	2 9/32	13.00
B536	2 3/16	EPEB22535H	EPB22535H	2 1/2	6 9/16	8	-	9 5/8	4 1/8	2 9/16	5/8	1 1/2	5	3 1/4	2 1/16	2 7/16	16.00
B540	2 7/16	EPEB22539H	EPB22539H	2 3/4	6 15/16	8 3/4	-	10 1/2	4 3/8	2 11/16	5/8	1 5/8	5 1/2	3 9/16	2 3/16	2 9/16	18.00
B548	2 11/16	EPEB22543H	EPB22543H	3 1/8	7 13/16	9 3/4	-	11 11/16	4 7/8	3 13/16	3/4	1 7/8	6 5/16	4 1/16	2 7/16	2 25/32	31.00
	2 15/16	EPEB22547H	EPB22547H														29.00
B556	3 7/16	EPEB22555H	EPB22555H	3 3/4	9 5/16	11 5/16	-	13 13/16	5 5/16	3 1/2	7/8	2 1/4	7 1/2	4 29/32	2 21/32	3	45.00
Four-Bolt Pillow Block																	
B540	2 7/16	EPEB22539FH	EPB22539FH	2 3/4	6 15/16	8 3/4	1 7/8	10 1/2	4 3/8	3 5/8	5/8	1 5/8	5 1/2	3 9/16	2 3/16	2 9/16	21.00
B548	2 11/16	EPEB22543FH	EPB22543FH	3 1/8	7 13/16	9 7/8	2 1/8	11 13/16	4 7/8	4 1/4	5/8	1 7/8	6 5/16	4 1/16	2 7/16	2 25/32	33.00
	2 15/16	EPEB22547FH	EPB22547FH														31.00
B556	3 7/16	EPEB22555FH	EPB22555FH	3 3/4	9 5/16	11 7/16	2 3/8	13 13/16	5 5/16	4 3/4	3/4	2 1/4	7 1/2	4 29/32	2 21/32	3	48.00
B564	3 15/16	EPEB22563FH	EPB22563FH	4 1/4	11 7/8	13	2 1/4	15 1/4	6 1/8	4 1/2	3/4	2 5/8	8 5/8	5 5/8	3 1/16	3 7/16	71.00
	4	EPEB22564FH	EPB22564FH														70.00
B572	4 3/16	EPEB22567YFH	EPB22567YFH	4 3/4	12 3/4	14 1/8	2 1/2	16 1/2	6 1/4	4 5/8	3/4	2 3/4	9 3/8	6 3/16	3 1/8	-	92.00
	4 7/16	EPEB22571YFH	EPB22571YFH														88.00
	4 1/2	EPEB22572YFH	EPB22572YFH														87.00
	110.00	*EPEB225M110YFH*	*EPB225M110YFH*	*120.65*	*323.90*	*358.80*	*63.50*	*419.10*	*158.75*	*117.48*	*20.00*	*69.80*	*238.10*	*157.16*	*79.37*	-	*40.70*
	115.00	*EPEB225M115YFH*	*EPB225M115YFH*														*39.50*
B580	4 15/16	EPEB22579YFH	EPB22579YFH	5 1/2	14 5/16	16 1/8	2 3/4	18 1/2	7 7/8	5 9/16	7/8	3	11 1/8	7 1/16	3 15/16	-	129.00
	5	EPEB22580YFH	EPB22580YFH														128.00
	125.00	*EPEB225M125YFH*	*EPB225M125YFH*	*139.70*	*363.60*	*409.60*	*69.80*	*469.90*	*200.02*	*141.29*	*24.00*	*76.20*	*282.57*	*179.38*	*100.01*	-	*58.10*

Additional Notes

- Please call 1-866-REXNORD for availability
- Lubrication fitting tap size, 1/8" PT
- Base to centerline tolerance, +/-.005" *(+/-0.13 mm)*
- Expansion - is 3/8" for all size codes
- H labyrinth seals standard
- All size codes available with type E lip seals & E7 triple lip seals

For the Selection Guide, Load Ratings and Speed Limits, see the Link-Belt Spherical Roller Bearings Engineering section on pages 135 - 140.

Note: Dimensions subject to change. Certified dimensions of ordered material furnished on request.

EPB22600, EPEB22600

Interchange: *EP2BIP, USRBE5000A, QVVP, DVP*

Photo Shows a 2-Bolt Spherical Roller Bearing Pillow Block Unit

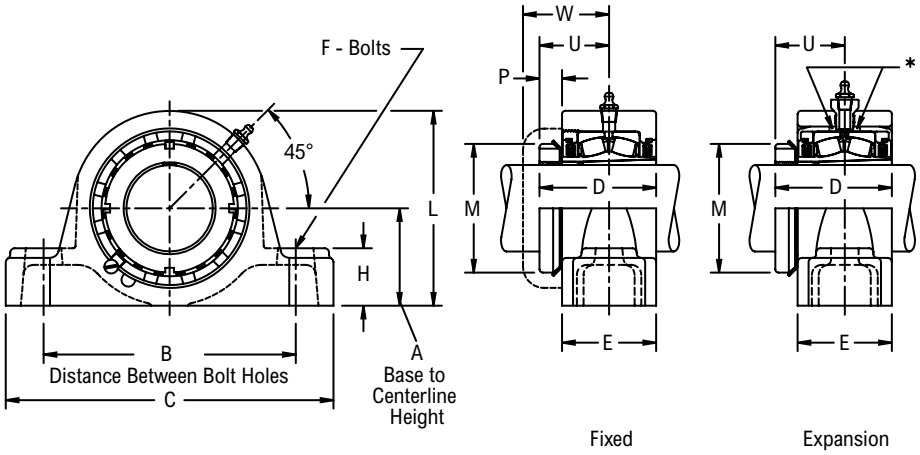

Product Features

- Self-aligning type E interchange
- Corrosion-resistant powder coating
- Cast iron housing
- Misalignment capabilities - total of 4°
- Broad range of sealing options
- Factory set clearance & lubrication
- Enhanced life mounting style
- Field interchangeable seals
- Fixed or Expansion - total of 3/8" expansion
- See Features and Benefits for additional info on pages 132 - 133.

Bearing Dimensions

Size Code	Shaft Diameter	Expansion Part Number	Fixed Part Number	A Base to Centerline Height	B Distance Between Bolt Holes Min	B Distance Between Bolt Holes Max	C	D	E	F Bolts	H	L	M	P	U	W	Approx. Weight
B624	1 7/16	EPEB22623H	EPB22623H	1 7/8	4 3/4	6	7 3/8	2.71	2 1/4	1/2	1 1/8	3 7/8	2 1/4	1/2	1 39/64	2 3/16	8.00
B631	1 15/16	EPEB22631H	EPB22631H	2 1/4	6 1/16	7 1/4	8 7/8	3.08	2 1/2	5/8	1 5/16	4 9/16	2 31/32	39/64	1 55/64	2 9/32	12.00
B635	2 3/16	EPEB22635H	EPB22635H	2 1/2	6 9/16	8	9 5/8	3.16	2 9/16	5/8	1 1/2	5	3 5/32	5/8	1 29/32	2 7/16	15.00
B639	2 7/16	EPEB22639H	EPB22639H	2 3/4	6 15/16	8 3/4	10 1/2	3.28	2 11/16	5/8	1 5/8	5 1/2	3 5/8	45/64	1 31/32	2 9/16	17.00
B647	2 11/16	EPEB22643H	EPB22643H	3 1/8	7 13/16	9 3/4	11 13/16	3.86	3 3/16	3/4	1 7/8	6 5/16	4 5/32	55/64	2 19/64	2 25/32	29.00
	2 15/16	EPEB22647H	EPB22647H														27.00
B655	3 7/16	EPEB22655H	EPB22655H	3 3/4	9 5/16	11 5/16	13 13/16	4.29	3 1/2	7/8	2 1/4	7 1/2	4 15/16	7/8	2 37/64	3	43.00

Additional Notes

- Please call 1-866-REXNORD for availability
- Lubrication fitting tap size, 1/8" PT
- Base to centerline tolerance, +/-.005" *(+/-0.13 mm)*
- Expansion - is 3/8" for all size codes
- Dimensions for "D", "P" & "U" based on unmounted condition
- H labyrinth seals standard
- All size codes available with type E lip seals & E7 triple lip seals
- For the Selection Guide, Load Ratings and Speed Limits, see the Link-Belt Spherical Roller Bearings Engineering section on pages 135 - 140.
- Note: Dimensions subject to change. Certified dimensions of ordered material furnished on request.

EPB22600F, EPEB22600F

Interchange: *EP4BIP, QVVPR*

Photo Shows a 4-Bolt Spherical Roller Bearing Pillow Block Unit

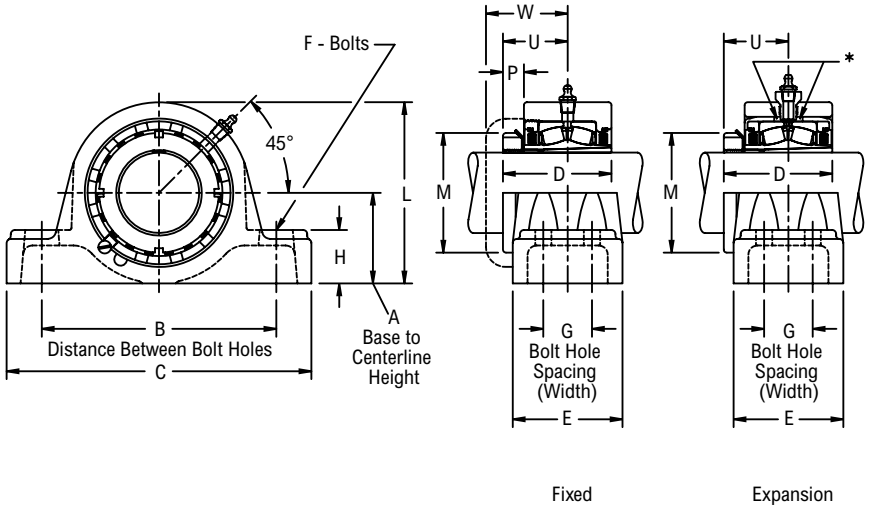

Product Features

- Self-aligning type E interchange
- Corrosion-resistant powder coating
- Cast iron housing
- Misalignment capabilities - total of 4°
- Broad range of sealing options
- Factory set clearance & lubrication
- Enhanced life mounting style
- Field interchangeable seals
- Fixed or Expansion - total of 3/8" expansion
- See Features and Benefits for additional info on pages 132 - 133.

Bearing Dimensions

Size Code	Shaft Diameter	Expansion Part Number	Fixed Part Number	A Base to Centerline Height	B Distance Between Bolt Holes Min	B Distance Between Bolt Holes Max	G Bolt Hole Spacing (Width)	C	D	E	F Bolts	H	L	M	P	U	W	Approx. Weight
B639	2 7/16	EPEB22639FH	EPB22639FH	2 3/4	6 15/16	8 3/4	1 7/8	10 1/2	3.28	3 5/8	5/8	1 5/8	5 1/2	3 5/8	5/8	1 31/32	2 9/16	20.00
B647	2 11/16	EPEB22643FH	EPB22643FH	3 1/8	7 13/16	9 7/8	2 1/8	11 13/16	3.86	4 1/4	5/8	1 7/8	6 5/16	4 5/32	45/64	2 19/64	2 25/32	31.00
	2 15/16	EPEB22647FH	EPB22647FH															29.00
B655	3 7/16	EPEB22655FH	EPB22655FH	3 3/4	9 5/16	11 5/16	2 3/8	13 13/16	4.29	4 3/4	3/4	2 1/4	7 1/2	4 15/16	55/64	2 37/64	3	46.00

Additional Notes

- Please call 1-866-REXNORD for availability
- Lubrication fitting tap size, 1/8" PT
- Base to centerline tolerance, +/-.005" *(+/-0.13 mm)*
- Expansion - is 3/8" for all size codes
- Dimensions for "D", "P" & "U" based on unmounted condition
- H labyrinth seals standard
- All size codes available with type E lip seals & E7 triple lip seals
- For the Selection Guide, Load Ratings and Speed Limits, see the Link-Belt Spherical Roller Bearings Engineering section on pages 135 - 140.
- Note: Dimensions subject to change. Certified dimensions of ordered material furnished on request.

FB22400, FEB22400

Interchange: *F4RS2, F4SS2, FYR, USFB5000, QAFY, QAFL*

Photo Shows a 4-Bolt Spherical Roller Bearing Flanged Unit

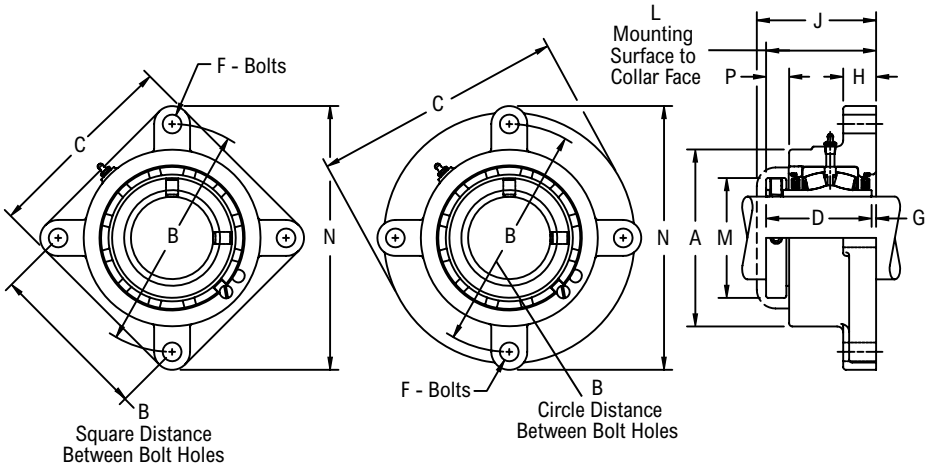

Product Features

- Corrosion-resistant powder coating
- Cast iron housing
- Misalignment capabilities - total of 4°
- Broad range of sealing options
- Factory set clearance & lubrication
- Hardened spring locking collar
- Field interchangeable seals
- Fixed or Expansion - total of 3/8 in expansion
- See Features and Benefits for additional info on pages 132 - 133.

Bearing Dimensions

Size Code	Shaft Diameter	Expansion Part Number	Expansion A	Fixed Part Number	Fixed A	B Distance Between Bolt Holes Square	B Distance Between Bolt Holes Circle	L Mounting Surface to Collar Face	C	D	F Bolts	G	H	J	M	N	P	Approx. Weight
3-Bolt Round																		
B416	1	-	-	FB22416H	2 7/8	-	4 1/8	2 19/32	4 3/4	2 9/16	3/8	1/32	9/16	2 15/16	1 3/4	5 1/8	17/32	3.00
	25.00	*-*	*-*	*FB224M25H*	*73.00*	*-*	*104.78*	*65.90*	*120.60*	*65.09*	*10.00*	*0.80*	*14.30*	*74.60*	*44.40*	*130.20*	*13.50*	*1.30*
B420	1 3/16	FEB22419H	3 1/2	FB22419H	3 1/8	-	4 1/2	2 23/32	5 1/8	2 11/16	3/8	1/32	19/32	3 1/16	1 31/32	5 1/2	17/32	6.00
	1 1/4	FEB22420H		FB22420H														
	30.00	*FEB224M30H*	*88.90*	*FB224M30H*	*79.40*	*-*	*114.30*	*69.00*	*130.20*	*68.26*	*10.00*	*0.80*	*15.10*	*77.80*	*50.00*	*139.70*	*13.50*	*2.40*
B424	1 7/16	FEB22423H	3 3/4	FB22423H	3 7/16	-	5	2 29/32	5 7/8	2 7/8	1/2	1/32	5/8	3 5/16	2 5/16	6 1/4	21/32	7.00
	1 1/2	FEB22424H		FB22424H														
	35.00	*FEB224M35H*	*95.20*	*FB224M35H*	*87.30*	*-*	*127.00*	*73.80*	*149.20*	*73.02*	*12.00*	*0.80*	*15.90*	*84.10*	*58.70*	*158.80*	*16.70*	*3.20*
4-Bolt Round																		
B428	1 5/8	FEB22426H	4 1/4	FB22426H	3 15/16	3 57/64	5 1/2	3 5/32	6 3/8	3 1/8	1/2	1/32	5/8	3 1/2	2 19/32	6 3/4	21/32	9.00
	1 11/16	FEB22427H		FB22427H														
	1 3/4	FEB22428H		FB22428H														
	40.00	*FEB224M40H*	*108.00*	*FB224M40H*	*100.00*	*98.83*	*139.70*	*80.20*	*161.90*	*79.38*	*12.00*	*0.80*	*15.90*	*88.90*	*65.90*	*171.40*	*16.70*	*4.30*
B432	1 15/16	FEB22431H	4 1/2	FB22431H	4 1/4	4 1/16	5 3/4	3 3/16	6 11/16	3 1/8	1/2	1/16	11/16	3 9/16	2 7/8	7	21/32	10.00
	2	FEB22432H		FB22432H														
	45.00	*FEB224M45H*	*114.30*	*FB224M45H*	*108.00*	*103.17*	*146.05*	*81.00*	*169.90*	*79.38*	*12.00*	*1.60*	*17.50*	*90.50*	*73.00*	*177.80*	*16.70*	*5.00*
	50.00	*FEB224M50H*		*FB224M50H*														*4.70*
B436	2 3/16	FEB22435H	4 7/8	FB22435H	4 7/8	4 1/2	6 3/8	3 13/32	7 3/8	3 5/16	5/8	3/32	11/16	3 25/32	3 1/4	7 3/4	25/32	14.00
	2 1/4	FEB22436H		FB22436H														
	55.00	*FEB224M55H*	*123.80*	*FB224M55H*	*123.80*	*114.30*	*161.92*	*86.50*	*187.30*	*84.14*	*16.00*	*2.40*	*17.50*	*96.00*	*82.60*	*196.80*	*19.80*	*6.50*
B440	2 7/16	FEB22439H	5 3/8	FB22439H	5 3/8	4 49/64	6 3/4	3 19/32	7 3/4	3 1/2	5/8	3/32	3/4	3 31/32	3 9/16	8 1/8	27/32	17.00
	2 1/2	FEB22440H		FB22440H														
	60.00	*FEB224M60H*	*136.50*	*FB224M60H*	*136.50*	*121.06*	*171.45*	*91.30*	*196.80*	*88.90*	*16.00*	*2.40*	*19.00*	*100.80*	*90.50*	*206.40*	*21.40*	*7.90*
B448	2 11/16	FEB22443H	6 1/4	FB22443H	6 1/4	5 9/16	7 7/8	4 3/32	9 1/8	4	3/4	3/32	7/8	4 7/16	4 1/16	9 1/2	27/32	28.00
	2 3/4	FEB22444H		FB22444H														27.00
	2 15/16	FEB22447H		FB22447H														26.00
	3	FEB22448H		FB22448H														
	65.00	*FEB224M65H*	*158.80*	*FB224M65H*	*158.80*	*141.27*	*200.02*	*104.00*	*231.80*	*101.60*	*20.00*	*2.40*	*22.20*	*112.70*	*103.20*	*241.30*	*21.40*	*12.70*
	70.00	*FEB224M70H*		*FB224M70H*														*12.50*
	75.00	*FEB224M75H*		*FB224M75H*														*12.00*
4-Bolt Square																		
B456	3 3/16	FEB22451H	7 3/8	FB22451H	7 3/8	6 23/32	9 1/2	4 9/16	8 7/16	4 3/8	3/4	1/4	1	4 29/32	4 29/32	11 7/16	15/16	41.00
	3 7/16	FEB22455H		FB22455H														39.00
	3 1/2	FEB22456H		FB22456H														
	80.00	*FEB224M80H*	*187.30*	*FB224M80H*	*187.30*	*170.64*	*241.30*	*115.90*	*214.31*	*111.12*	*20.00*	*6.40*	*25.40*	*124.60*	*124.60*	*290.50*	*23.80*	*18.60*
	85.00	*FEB224M85H*		*FB224M85H*														*18.10*

Continued...

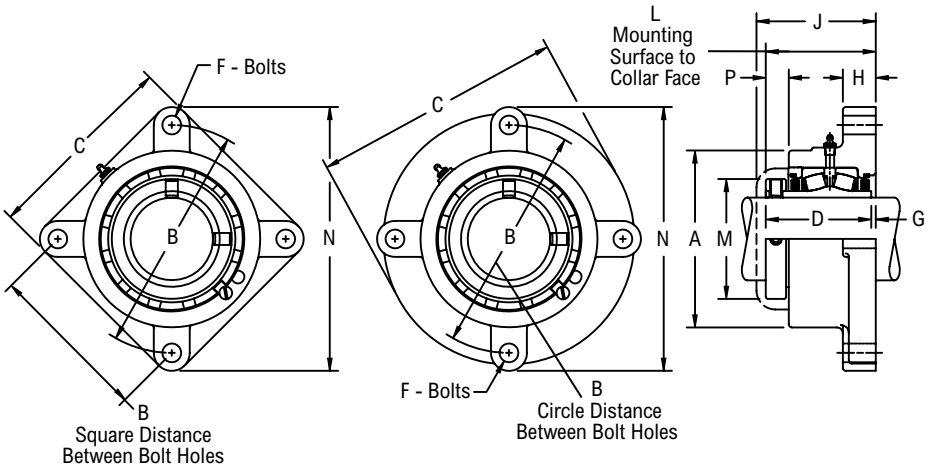

Continued...

Bearing Dimensions

Size Code	Shaft Diameter	Expansion Part Number	Expansion A	Fixed Part Number	Fixed A	B Distance Between Bolt Holes Square	B Distance Between Bolt Holes Circle	L Mounting Surface to Collar Face	C	D	F Bolts	G	H	J	M	N	P	Approx. Weight
4-Bolt Square (continued)																		
B464	3 11/16	FEB22459H	8 3/8	FB22459H	8 1/2	7 19/32	10 3/4	5 7/32	9 3/4	5 1/16	7/8	1/4	1 1/8	5 5/8	5 5/8	12 29/32	1 1/32	59.00
	3 15/16	FEB22463H		FB22463H														57.00
	4	FEB22464H		FB22464H														
	90.00	*FEB224M90H*	*212.70*	*FB224M90H*	*215.90*	*192.88*	*273.05*	*132.60*	*247.60*	*128.59*	*24.00*	*6.40*	*28.60*	*142.90*	*142.90*	*327.80*	*26.20*	*27.70*
	100.00	*FEB224M100H*		*FB224M100H*														*25.90*

Additional Notes

Please call 1-866-REXNORD for availability

Lubrication fitting tap size, 1/8 in PT

Expansion - is 3/8 in for all size codes

For expansion units, dimensions “G”, “L” & “P” are minimum values. For maximum values, add 3/8 in

H labyrinth seals standard

All size codes available with type E lip seals, except E7 in size code B416

For the Selection Guide, Load Ratings and Speed Limits, see the Link-Belt Spherical Roller Bearings Engineering section on pages 135 - 140.

Note: Dimensions subject to change. Certified dimensions of ordered material furnished on request.

FB22600, FEB22600

Interchange: *F4RIP, F4SIP, USFB5000A, QVFL, QVVFL*

Photo Shows a 4-Bolt Spherical Roller Bearing Flanged Unit

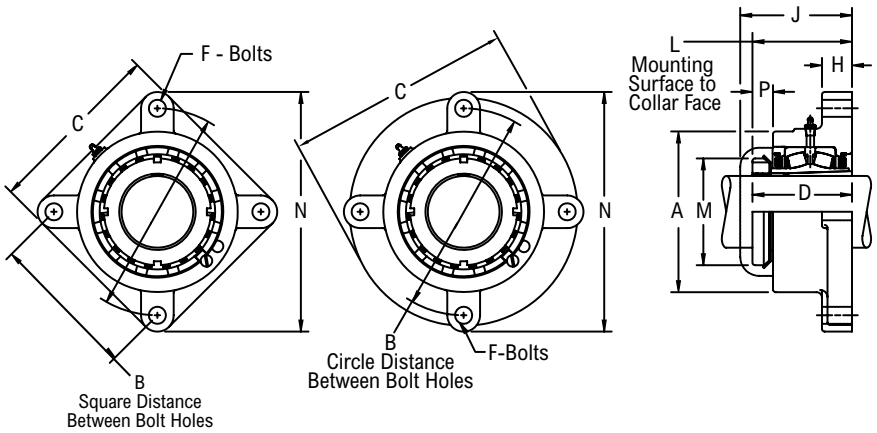

Product Features

- Corrosion-resistant powder coating
- Cast iron housing
- Misalignment capabilities - total of 4°
- Broad range of sealing options
- Factory set clearance & lubrication
- Enhanced life mounting style
- Field interchangeable seals
- Fixed or Expansion - total of 3/8 in expansion
- See Features and Benefits for additional info on pages 132 - 133.

Bearing Dimensions

Size Code	Shaft Diameter	Expansion Part Number	Expansion A	Fixed Part Number	Fixed A	B Distance Between Bolt Holes Square	B Distance Between Bolt Holes Circle	L Mounting Surface to Collar Face	C	D	F Bolts	H	J	M	N	P	Approx. Weight
3-Bolt Round																	
B624	1 7/16	FEB22623H	3 3/4	FB22623H	3 7/16	-	5	2 3/4	5 7/8	2.71	1/2	5/8	3 5/16	2 1/4	6 1/4	1/2	7.00
4-Bolt Round																	
B631	1 15/16	FEB22631H	4 1/2	FB22631H	4 1/4	4 1/16	5 3/4	3 9/64	6 11/16	3.08	1/2	11/16	3 9/16	2 31/32	7	5/8	10.00
B635	2 3/16	FEB22635H	4 7/8	FB22635H	4 7/8	4 1/2	6 3/8	3 17/64	7 3/8	3.16	5/8	11/16	3 25/32	3 5/32	7 3/4	41/64	14.00
B639	2 7/16	FEB22639H	5 3/8	FB22639H	5 3/8	4 49/64	6 3/4	3 3/8	7 3/4	3.28	5/8	3/4	3 31/32	3 5/8	8 1/8	5/8	17.00
B647	2 11/16	FEB22643H	6 1/4	FB22643H	6 1/4	5 9/16	7 7/8	3 31/32	9 1/8	3.86	3/4	7/8	4 7/16	4 5/32	9 1/2	45/64	27.00
	2 15/16	FEB22647H		FB22647H													26.00
4-Bolt Square																	
B655	3 7/16	FEB22655H	7 3/8	FB22655H	7 3/8	6 23/32	9 1/2	4 31/64	8 7/16	4.29	3/4	1	4 29/32	4 15/16	11 7/16	55/64	39.00
B663	3 15/16	FEB22663H	8 3/8	FB22663H	8 1/2	7 19/32	10 3/4	5 7/64	9 3/4	4.94	7/8	1 1/8	5 5/8	5 7/16	12 29/32	59/64	57.00

Additional Notes

- Please call 1-866-REXNORD for availability
- Lubrication fitting tap size, 1/8 in PT
- Expansion - is 3/8 in for all size codes
- Dimensions for “D”, “L” & “P” based on unmounted condition
- For expansion units, dimensions “G”, “L” & “P” are minimum values. For maximum values, add 3/8 in
- H labyrinth seals standard
- All size codes available with type E lip seals & E7 triple lip seals
- For the Selection Guide, Load Ratings and Speed Limits, see the Link-Belt Spherical Roller Bearings Engineering section on pages 135 - 140.
- Note: Dimensions subject to change. Certified dimensions of ordered material furnished on request.

EFRB22400

Interchange: *EF4BS2, F4BE, FYE, USFBE5000, RFBA, QAF, E4BFTRB*

Photo Shows a 4-Bolt Spherical Roller Bearing Flanged Unit

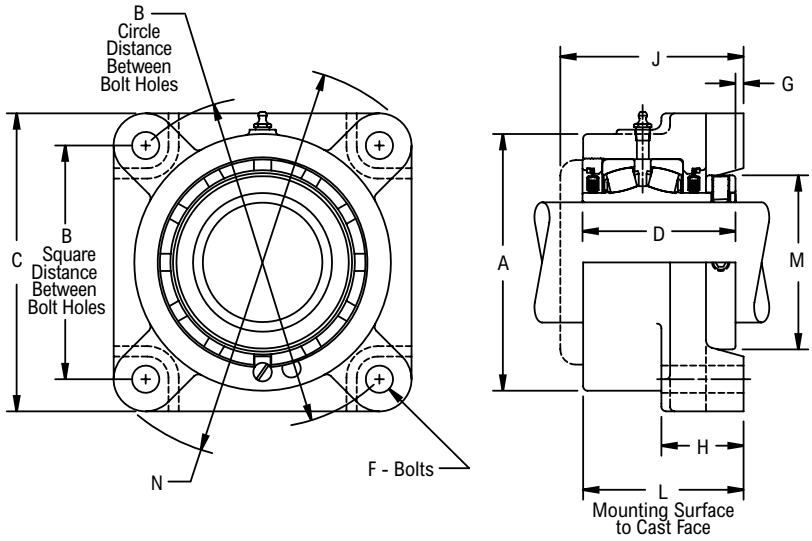

Product Features

- Self aligning type E interchange
- Corrosion-resistant powder coating
- Cast iron housing
- Misalignment capabilities - total of 4°
- Broad range of sealing options
- Factory set clearance & lubrication
- Hardened spring locking collar
- Field interchangeable seals
- See Features and Benefits for additional info on pages 132 - 133.

Bearing Dimensions

Size Code	Shaft Diameter	Part Number	B Distance Between Bolt Holes		L Mounting Surface to Cast Face	A	C	D	F Bolts	G	H	J	M	N	Approx. Weight
			Square	Circle											
B424	1 7/16	EFRB22423H	3 1/2	4 61/64	2 31/32	3 11/16	4 5/8	2 7/8	1/2	1/16	1 3/8	4 1/32	2 5/16	6 1/16	8.00
	35.00	*EFRB224M35H*	*88.90*	*125.81*	*75.40*	*93.70*	*117.50*	*73.02*	*12.00*	*1.60*	*34.90*	*102.40*	*58.70*	*154.00*	*3.40*
B428	1 1/2	EFRB224B24H	4 1/8	5 53/64	3 9/32	4 1/4	5 3/8	3 1/8	1/2	1/8	1 7/16	4 9/32	2 19/32	7 7/32	11.00
	1 5/8	EFRB22426H													
	1 11/16	EFRB22427H													10.00
	40.00	*EFRB224M40H*	*104.80*	*148.03*	*83.30*	*108.00*	*136.50*	*79.38*	*12.00*	*3.20*	*36.50*	*108.70*	*65.90*	*183.40*	*5.10*
B432	1 3/4	EFRB224B28H	4 3/8	6 3/16	3 9/32	4 1/2	5 5/8	3 1/8	1/2	1/8	1 7/16	4 5/16	2 7/8	7 5/16	11.00
	1 15/16	EFRB22431H													
	2	EFRB22432H													10.00
	45.00	*EFRB224M45H*	*111.10*	*157.18*	*83.30*	*114.30*	*142.90*	*79.38*	*12.00*	*3.20*	*36.50*	*109.50*	*73.00*	*185.70*	*5.30*
	50.00	*EFRB224M50H*													*5.00*
B436	2 3/16	EFRB22435H	4 7/8	6 57/64	3 1/2	5	6 1/4	3 5/16	5/8	1/8	1 9/16	4 5/8	3 1/4	8 9/32	15.00
	55.00	*EFRB224M55H*	*123.80*	*175.03*	*88.90*	*127.00*	*158.80*	*84.14*	*16.00*	*3.20*	*39.70*	*117.50*	*82.60*	*210.30*	*7.10*
B440	2 1/4	EFRB224B36H	5 3/8	7 19/32	3 23/32	5 1/2	6 7/8	3 1/2	5/8	3/16	1 23/32	4 15/16	3 9/16	8 31/32	18.00
	2 7/16	EFRB22439H													17.00
	2 1/2	EFRB22440H													
	60.00	*EFRB224M60H*	*136.50*	*192.89*	*94.50*	*139.70*	*174.60*	*88.90*	*16.00*	*4.80*	*43.70*	*125.40*	*90.50*	*227.80*	*7.90*
B448	2 11/16	EFRB22443H	6	8 31/64	4 7/32	6 1/2	7 3/4	4	3/4	3/16	1 25/32	5 13/32	4 1/16	10 1/8	26.00
	2 3/4	EFRB22444H													25.00
	2 15/16	EFRB22447H													24.00
	3	EFRB22448H													
	65.00	*EFRB224M65H*	*152.40*	*215.49*	*107.20*	*165.10*	*196.90*	*101.60*	*20.00*	*4.80*	*45.20*	*137.30*	*103.20*	*257.20*	*11.70*
	70.00	*EFRB224M70H*													*11.50*
	75.00	*EFRB224M75H*													*11.00*
B456	3 3/16	EFRB22451H	7	9 59/64	4 21/32	7 3/8	9 1/4	4 3/8	3/4	1/4	1 31/32	5 3/4	4 29/32	11 21/32	42.00
	3 7/16	EFRB22455H													41.00
	3 1/2	EFRB22456H													40.00
	80.00	*EFRB224M80H*	*177.80*	*251.23*	*118.30*	*187.30*	*235.00*	*111.12*	*20.00*	*6.40*	*50.00*	*146.00*	*124.60*	*296.10*	*18.90*
	85.00	*EFRB224M85H*													*18.40*
B464	3 11/16	EFRB22459H	7 3/4	10 61/64	5 15/32	8 7/8	9 3/4	5 1/16	7/8	1/4	2 7/32	6 5/8	5 5/8	12 31/32	58.00
	3 15/16	EFRB22463H													56.00
	4	EFRB22464H													
	90.00	*EFRB224M90H*	*196.80*	*278.21*	*138.90*	*247.65*	*247.65*	*128.59*	*24.00*	*6.40*	*56.40*	*168.30*	*142.90*	*329.40*	*27.20*
	100.00	*EFRB224M100H*													*25.40*

Additional Notes

- Please call 1-866-REXNORD for availability
- Lubrication fitting tap size, 1/8 in PT
- H labyrinth seals standard
- All size codes available with type E lip seals & E7 triple lip seals

For the Selection Guide, Load Ratings and Speed Limits, see the Link-Belt Spherical Roller Bearings Engineering section on pages 135 - 140.

Note: Dimensions subject to change. Certified dimensions of ordered material furnished on request.

EFB22500

Interchange: *RFB, QAAF*

Photo Shows a 4-Bolt Spherical Roller Bearing Flanged Unit

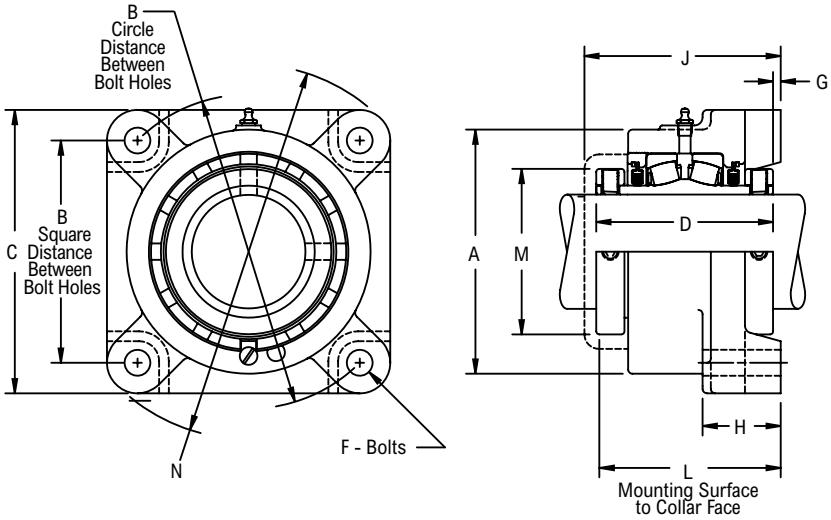

Product Features

- Self aligning type E interchange
- Corrosion-resistant powder coating
- Cast iron housing
- Misalignment capabilities - total of 4°
- Broad range of sealing options
- Factory set clearance & lubrication
- Two hardened spring locking collars
- Field interchangeable seals
- See Features and Benefits for additional info on pages 132 - 133.

Bearing Dimensions

Size Code	Shaft Diameter	Part Number	B Distance Between Bolt Holes		L Mounting Surface to Collar Face	A	C	D	F Bolts	G	H	J	M	N	Approx. Weight
			Square	Circle											
B524	1 7/16	EFB22523H	3 1/2	4 61/64	3 5/8	3 11/16	4 5/8	3 9/16	1/2	1/16	1 3/8	4 1/32	2 5/16	6 1/16	8.00
B528	1 11/16	EFB22527H	4 1/8	5 53/64	3 15/16	4 1/4	5 3/8	3 13/16	1/2	1/8	1 7/16	4 9/32	2 19/32	7 7/32	11.00
B531	1 15/16	EFB22531H	4 3/8	6 3/16	3 15/16	4 1/2	5 5/8	3 13/16	1/2	1/8	1 7/16	4 5/16	2 7/8	7 5/16	12.00
B536	2 3/16	EFB22535H	4 7/8	6 57/64	4 1/4	5	6 1/4	4 1/8	5/8	1/8	1 9/16	4 5/8	3 1/4	8 9/32	16.00
B540	2 7/16	EFB22539H	5 3/8	7 19/32	4 9/16	5 1/2	6 7/8	4 3/8	5/8	3/16	1 23/32	4 15/16	3 9/16	8 31/32	18.00
B548	2 11/16	EFB22543H	6	8 31/64	5 1/16	6 1/2	7 3/4	4 7/8	3/4	3/16	1 25/32	5 13/16	4 1/16	10 1/8	28.00
	2 15/16	EFB22547H													26.00
B556	3 7/16	EFB22555H	7	9 59/64	5 13/32	7 3/8	9 1/4	5 5/16	3/4	1/4	1 31/32	5 3/4	4 29/32	11 21/32	44.00
B564	3 15/16	EFB22563H	7 3/4	10 61/64	6 7/32	8 7/8	10 1/4	6 1/8	7/8	1/4	2 7/32	6 5/8	5 5/8	12 31/32	60.00
	4	EFB22564H													59.00

Additional Notes

- Please call 1-866-REXNORD for availability
- Lubrication fitting tap size, 1/8 in PT
- H labyrinth seals standard
- All size codes available with type E lip seals & E7 triple lip seals
- For the Selection Guide, Load Ratings and Speed Limits, see the Link-Belt Spherical Roller Bearings Engineering section on pages 135 - 140.

Note: Dimensions subject to change. Certified dimensions of ordered material furnished on request.

EFB22600

Interchange: *EF4BIP, USFBE5000A, QVF, QVVF, DVF*

Photo Shows a 4-Bolt Spherical Roller Bearing Flanged Unit

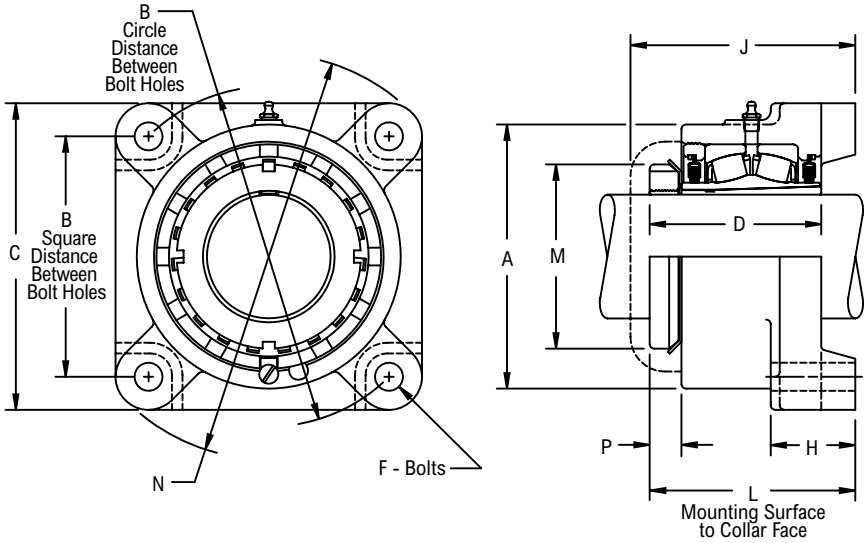

Product Features

- Self aligning type E interchange
- Corrosion-resistant powder coating
- Cast iron housing
- Misalignment capabilities - total of 4°
- Broad range of sealing options
- Factory set clearance & lubrication
- Enhanced life mounting style
- Field interchangeable seals
- See Features and Benefits for additional info on pages 132 - 133.

Bearing Dimensions

Size Code	Shaft Diameter	Part Number	B Distance Between Bolt Holes		L Mounting Surface to Collar Face	A	C	D	F Bolts	H	J	M	N	P	Approx. Weight
			Square	Circle											
B624	1 7/16	EFB22623H	3 1/2	4 61/64	3 29/64	3 11/16	4 5/8	2.71	1/2	1 3/8	4 1/32	2 1/4	6 1/16	31/64	8.00
B631	1 15/16	EFB22631H	4 3/8	6 3/16	3 57/64	4 1/2	5 5/8	3.08	1/2	1 7/16	4 5/16	2 31/32	7 5/16	39/64	11.00
B635	2 3/16	EFB22635H	4 7/8	6 57/64	4 3/32	5	6 1/4	3.16	5/8	1 9/16	4 5/8	3 5/32	8 9/32	5/8	15.00
B639	2 7/16	EFB22639H	5 3/8	7 19/32	4 11/32	5 1/2	6 7/8	3.28	5/8	1 23/32	4 15/16	3 5/8	8 31/32	5/8	17.00
B647	2 11/16	EFB22643H	6	8 31/64	4 59/64	6 1/2	7 3/4	3.86	3/4	1 25/32	5 13/32	4 5/32	10 1/8	45/64	25.00
	2 15/16	EFB22647H													24.00
B655	3 7/16	EFB22655H	7	9 59/64	5 21/64	7 3/8	9 1/4	4.29	3/4	1 31/32	5 3/4	4 15/16	11 21/32	55/64	41.00
B663	3 15/16	EFB22663H	7 3/4	10 61/64	6 7/64	8 7/8	10 1/4	4.94	7/8	2 7/32	6 5/8	5 7/16	12 31/32	59/64	56.00

Additional Notes

- Please call 1-866-REXNORD for availability
- Lubrication fitting tap size, 1/8 in PT
- Dimensions for “D”, “L” & “P” based on unmounted condition
- H labyrinth seals standard
- All size codes available with type E lip seals & E7 triple lip seals

For the Selection Guide, Load Ratings and Speed Limits, see the Link-Belt Spherical Roller Bearings Engineering section on pages 135 - 140.

Note: Dimensions subject to change. Certified dimensions of ordered material furnished on request.

FBB22400

Interchange: *USFB5000*

Photo Shows a 4-Bolt Spherical Roller Bearing Flanged Bracket Unit with High-Test Iron Housing

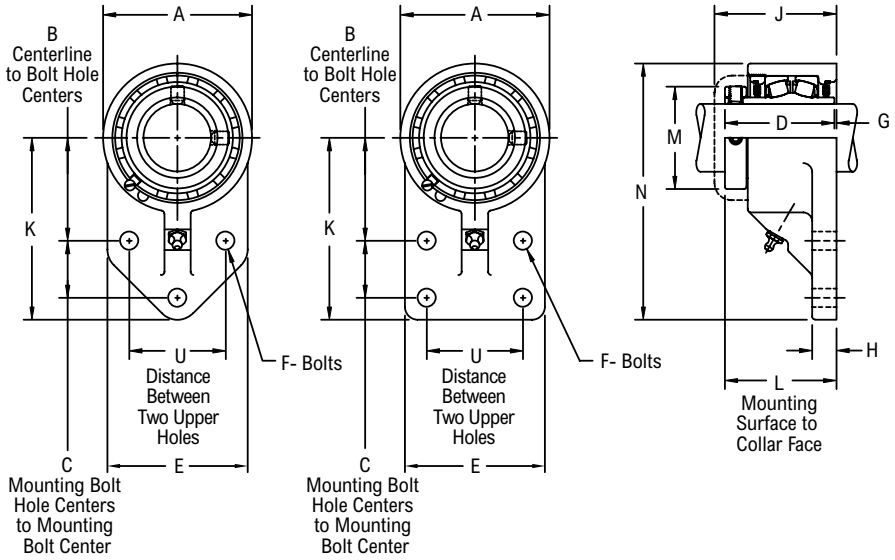

Product Features

- Corrosion-resistant powder coating
- High test iron housing
- Misalignment capabilities - total of 4°
- Broad range of sealing options
- Factory set clearance & lubrication
- Hardened spring locking collar
- Field interchangeable seals
- See Features and Benefits for additional info on pages 132 - 133.

Bearing Dimensions

Size Code	Shaft Diameter	Part Number	B Centerline to Bolt Hole Centers	C Mounting Bolt Hole Centers to Mounting Bolt Center	L Mounting Surface to Collar Face	U Distance Between Two Upper Holes	A	D	E	F Bolts	G	H	J	K	M	N	Approx. Weight
3-Bolt																	
B424	1 7/16	FBB22423H	2 3/8	1 1/4	2 29/32	2	3 7/16	2 7/8	3 1/4	1/2	1/32	5/8	3 5/16	4 1/4	2 5/16	5 31/32	6.40
	1 1/2	FBB22424H															
	35.00	*FBB224M35H*	*60.30*	*31.80*	*73.80*	*50.80*	*87.30*	*73.02*	*82.60*	*12.00*	*0.80*	*15.90*	*84.10*	*108.00*	*58.70*	*151.60*	*2.90*
B432	1 15/16	FBB22431H	2 15/16	1 5/8	3 3/16	2 3/4	4 1/4	3 1/8	4	1/2	1/16	11/16	3 9/16	5 3/16	2 7/8	7 5/16	10.00
	2	FBB22432H															
	45.00	*FBB224M45H*	*74.60*	*41.30*	*81.00*	*69.80*	*108.00*	*79.38*	*101.60*	*12.00*	*1.60*	*17.50*	*90.50*	*131.80*	*73.00*	*185.70*	*4.40*
	50.00	*FBB224M50H*															*4.30*
4-Bolt																	
B440	2 7/16	FBB22439H	3 3/4	1 3/4	3 19/32	3	5 3/8	3 1/2	4 7/8	5/8	3/32	3/4	3 31/32	6 1/4	3 9/16	8 15/16	17.50
	2 1/2	FBB22440H															
	60.00	*FBB224M60H*	*95.20*	*44.40*	*91.30*	*76.20*	*136.50*	*88.90*	*123.80*	*16.00*	*2.40*	*19.00*	*100.80*	*158.80*	*90.50*	*227.00*	*8.10*
B448	2 11/16	FBB22443H	3 7/8	2 1/4	4 3/32	4	6 1/4	4	5 3/4	3/4	3/32	7/8	4 7/16	7	4 1/16	10 1/8	30.00
	2 3/4	FBB22444H															
	2 15/16	FBB22447H															28.00
	3	FBB22448H															
	65.00	*FBB224M65H*	*98.40*	*57.20*	*104.00*	*101.60*	*158.80*	*101.60*	*146.00*	*20.00*	*2.40*	*22.20*	*112.70*	*177.80*	*103.20*	*257.20*	*13.70*
	70.00	*FBB224M70H*															*13.50*
	75.00	*FBB224M75H*															*12.80*

Additional Notes

- Please call 1-866-REXNORD for availability
- Lubrication fitting tap size: for size code B424, 1/4 in-28 UNF: for all other size codes, 1/8 in PT
- H labyrinth seals standard
- All size codes available with type E lip seals & E7 triple lip seals
- For the Selection Guide, Load Ratings and Speed Limits, see the Link-Belt Spherical Roller Bearings Engineering section on pages 135 - 140.
- Note: Dimensions subject to change. Certified dimensions of ordered material furnished on request.

FBB22600

Interchange: *USFB5000A*

Photo Shows a 4-Bolt Spherical Roller Bearing Flanged Bracket Unit with High-Test Iron Housing

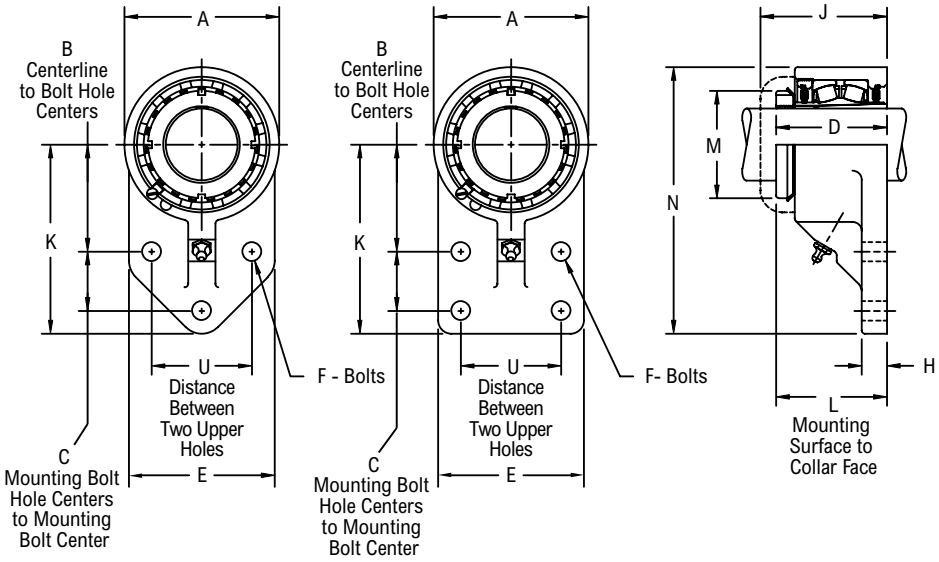

Product Features

- Corrosion-resistant powder coating
- High test iron housing
- Misalignment capabilities - total of 4°
- Broad range of sealing options
- Factory set clearance & lubrication
- Enhanced life mounting style
- Field interchangeable seals
- See Features and Benefits for additional info on pages 132 - 133.

Bearing Dimensions

Size Code	Shaft Diameter	Part Number	B Centerline to Bolt Hole Centers	C Mounting Bolt Hole Centers to Mounting Bolt Center	L Mounting Surface to Collar Face	U Distance Between Two Upper Holes	A	D	E	F Bolts	H	J	K	M	N	Approx. Weight
3-Bolt																
B624	1 7/16	FBB22623H	2 3/8	1 1/4	2 3/4	2	3 7/16	2.71	3 1/4	1/2	5/8	3 5/16	4 1/4	2 1/4	5 31/32	6.40
B631	1 15/16	FBB22631H	2 15/16	1 5/8	3 9/64	2 3/4	4 1/4	3.08	4	1/2	11/16	3 9/16	5 3/16	2 31/32	7 5/16	10.00
4-Bolt																
B639	2 7/16	FBB22639H	3 3/4	1 3/4	3 3/8	3	5 3/8	3.16	4 7/8	5/8	3/4	3 31/32	6 1/4	3 5/32	8 15/16	17.50
B647	2 11/16	FBB22643H	3 7/8	2 1/4	3 61/64	4	6 1/4	3.28	5 3/4	3/4	7/8	4 7/16	7	3 5/8	10 1/8	30.00
	2 15/16	FBB22647H														28.00

Additional Notes

- Please call 1-866-REXNORD for availability
- Lubrication fitting tap size: for size code B624, 1/4 in-28 UNF: for all other size codes, 1/8 in PT
- Dimensions for “D” & “L” based on unmounted condition
- H labyrinth seals standard
- All size codes available with type E lip seals & E7 triple lip seals
- For the Selection Guide, Load Ratings and Speed Limits, see the Link-Belt Spherical Roller Bearings Engineering section on pages 135 - 140.
- Note: Dimensions subject to change. Certified dimensions of ordered material furnished on request.

FCB22400

Interchange: *FCS2, FCE, FYRP, USFC5000, USFCE5000, RFPA, QACW, EPFTRB*

Photo Shows a 4-Bolt Spherical Roller Bearing Flanged Cartridge Unit

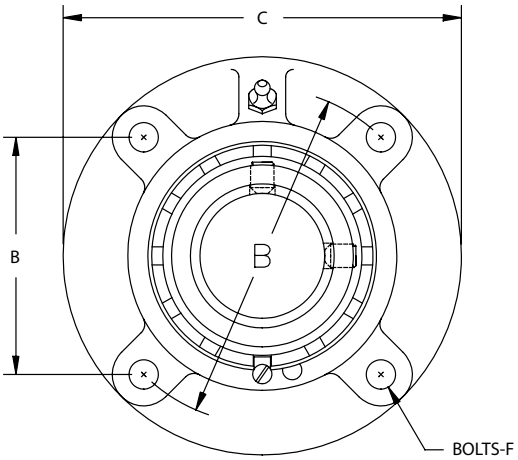

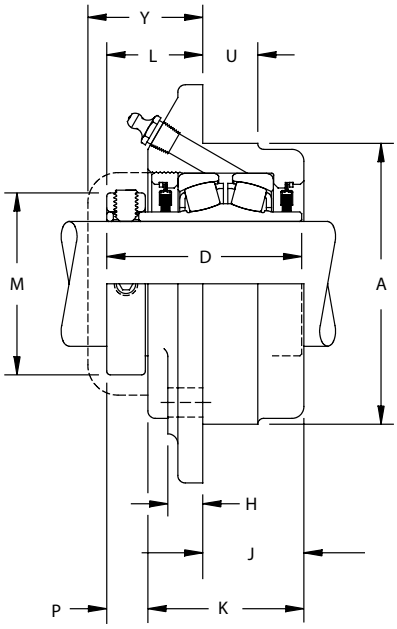

Product Features

- Self aligning type E interchange
- Corrosion-resistant powder coating
- Cast iron housing
- Misalignment capabilities - total of 4°
- Broad range of sealing options
- Factory set clearance & lubrication
- Hardened spring locking collar
- Field interchangeable seals
- See Features and Benefits for additional info on pages 132 - 133.

Bearing Dimensions

Size Code	Shaft Diameter	Part Number	A Pilot Diameter	B Distance Between Bolt Holes Square	B Distance Between Bolt Holes Circle	L Mounting Surface to Collar Face	C	D	F Bolts	H	J	K	M	P	U	Y	Approx. Weight
							4-Bolt										
B416	1	FCB22416H	3.000	2 9/16	3 5/8	1 9/32	4 3/8	2 9/16	5/16	7/16	1 1/4	2	1 3/4	17/32	5/8	1 5/8	4.00
	25.00	*FCB224M25H*	*76.200*	*65.10*	*92.08*	*32.50*	*111.10*	*65.09*	*8.00*	*11.10*	*31.80*	*50.80*	*44.40*	*13.50*	*15.90*	*41.30*	*1.60*
B420	1 3/16	FCB22419H	3.375	2 59/64	4 1/8	1 9/32	5	2 11/16	3/8	7/16	1 3/8	2 1/4	1 31/32	17/32	3/4	1 5/8	5.00
	1 1/4	FCB22420H															
	30.00	*FCB224M30H*	*85.720*	*74.20*	*104.78*	*32.50*	*127.00*	*68.26*	*10.00*	*11.10*	*34.90*	*57.20*	*50.00*	*13.50*	*19.00*	*41.30*	*2.20*
B424	1 7/16	FCB22423H	3.625	3 3/32	4 3/8	1 15/32	5 1/4	2 7/8	3/8	1/2	1 3/8	2 3/16	2 5/16	21/32	3/4	1 7/8	6.00
	1 1/2	FCB22424H															
	35.00	*FCB224M35H*	*92.080*	*78.60*	*111.12*	*37.30*	*133.40*	*73.02*	*10.00*	*12.70*	*34.90*	*55.60*	*58.70*	*16.70*	*19.00*	*47.60*	*2.60*
B428	1 5/8	FCB22426H	4.250	3 5/8	5 1/8	1 17/32	6 1/8	3 1/8	7/16	1/2	1 17/32	2 7/16	2 19/32	21/32	7/8	1 7/8	9.00
	1 11/16	FCB22427H															
	1 3/4	FCB22428H															
	40.00	*FCB224M40H*	*107.950*	*92.10*	*130.18*	*38.90*	*155.60*	*79.38*	*10.00*	*12.70*	*38.90*	*61.90*	*65.90*	*16.70*	*22.20*	*47.60*	*3.80*
B432	1 15/16	FCB22431H	4.500	3 51/64	5 3/8	1 17/32	6 3/8	3 1/8	7/16	9/16	1 9/16	2 7/16	2 7/8	21/32	7/8	1 29/32	9.00
	2	FCB22432H															
	45.00	*FCB224M45H*	*114.300*	*96.40*	*136.52*	*38.90*	*161.90*	*79.38*	*10.00*	*14.30*	*39.70*	*61.90*	*73.00*	*16.70*	*22.20*	*48.40*	*4.00*
	50.00	*FCB224M50H*															*4.30*
B436	2 3/16	FCB22435H	5.000	4 1/4	6	1 21/32	7 1/8	3 5/16	1/2	9/16	1 9/16	2 1/2	3 1/4	25/32	1	2 1/32	12.00
	2 1/4	FCB22436H															
	55.00	*FCB224M55H*	*127.000*	*107.90*	*152.40*	*42.10*	*181.00*	*84.14*	*12.00*	*14.30*	*39.70*	*63.50*	*82.60*	*19.80*	*25.40*	*51.60*	*5.60*
B440	2 7/16	FCB22439H	5.500	4 19/32	6 1/2	1 13/16	7 5/8	3 1/2	1/2	5/8	1 11/16	2 5/8	3 9/16	7/8	1	2 5/32	16.00
	2 1/2	FCB22440H															
	60.00	*FCB224M60H*	*139.700*	*116.70*	*165.10*	*46.00*	*193.70*	*88.90*	*12.00*	*15.90*	*42.90*	*66.70*	*90.50*	*22.20*	*25.40*	*54.80*	*7.20*
B448	2 11/16	FCB22443H	6.375	5 19/64	7 1/2	1 31/32	8 3/4	4	5/8	3/4	2	3 1/8	4 1/16	27/32	1 1/4	2 5/16	25.00
	2 3/4	FCB22444H															
	2 15/16	FCB22447H															24.00
	3	FCB22448H															
	65.00	*FCB224M65H*	*161.920*	*134.50*	*190.50*	*50.00*	*222.20*	*101.60*	*16.00*	*19.00*	*50.80*	*79.40*	*103.20*	*21.40*	*31.80*	*58.70*	*11.60*
	70.00	*FCB224M70H*															*11.40*
	75.00	*FCB224M75H*															*11.00*
B456	3 3/16	FCB22451H	7.375	6 3/32	8 5/8	2 7/16	10 1/4	4 3/8	3/4	15/16	2	3 7/16	4 29/32	15/16	1 1/4	2 25/32	38.00
	3 7/16	FCB22455H															37.00
	3 1/2	FCB22456H															36.00
	80.00	*FCB224M80H*	*187.320*	*154.80*	*219.08*	*61.90*	*260.40*	*111.12*	*20.00*	*23.80*	*50.80*	*87.30*	*124.60*	*23.80*	*31.80*	*70.60*	*17.40*
	85.00	*FCB224M85H*															*16.90*

Continued...

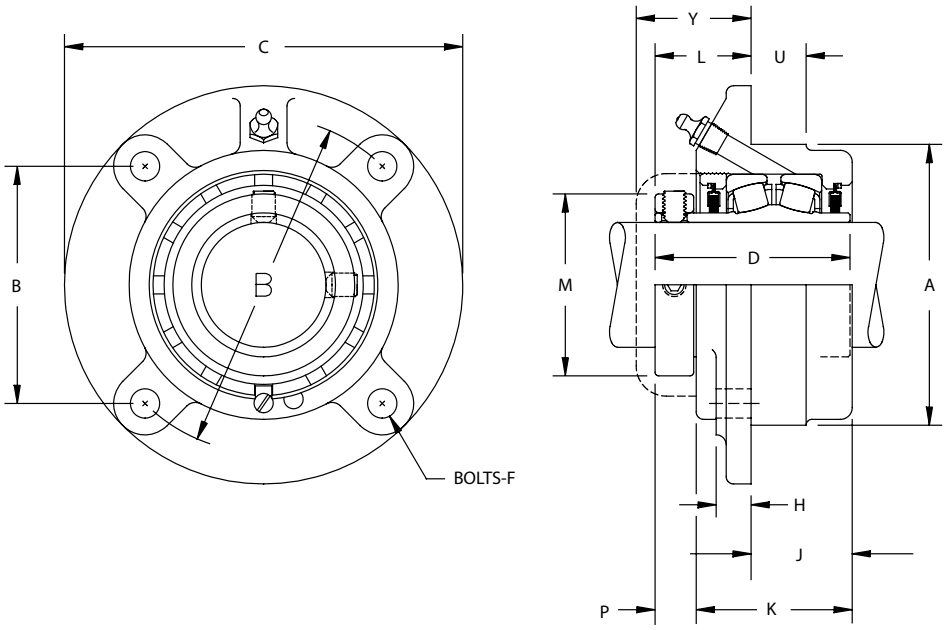

Continued...

Bearing Dimensions

Size Code	Shaft Diameter	Part Number	A Pilot Diameter	B Distance Between Bolt Holes		L Mounting Surface to Collar Face	C	D	F Bolts	H	J	K	M	P	U	Y	Approx. Weight
				Square	Circle												
4-Bolt (continued)																	
B464	3 11/16	FCB22459H	8.125	6 5/8	9 3/8	2 21/32	10 7/8	5 3/16	3/4	1 1/8	2 1/2	4 1/8	5 5/8	1 1/32	1 1/2	3 1/16	52.00
	3 15/16	FCB22463H															50.00
	4	FCB22464H															
	90.00	*FCB224M90H*	*206.380*	*168.30*	*238.12*	*67.50*	*276.20*	*131.76*	*20.00*	*28.60*	*63.50*	*104.80*	*142.90*	*26.20*	*38.10*	*77.80*	*24.60*
	100.00	*FCB224M100H*															*22.80*

Additional Notes

Please call 1-866-REXNORD for availability

Lubrication fitting tap size: for size code B416, 1/4 in-28 UNF: for all other size codes, 1/8 in PT

Pilot Diameter tolerance, +.000 in/-.002 in *(+0.00 mm/-0.05 mm)*

Bore tolerance for mounting, +.002 in/-.000 in *(+0.05 mm/-0.00 mm)*

H labyrinth seals standard

All size codes available with type E lip seals, except E7 in size code B416

For the Selection Guide, Load Ratings and Speed Limits, see the Link-Belt Spherical Roller Bearings Engineering section on pages 135 - 140.

Note: Dimensions subject to change. Certified dimensions of ordered material furnished on request.

FCB22600

Interchange: *FCIP, USFC5000A, USFCE5000A, QVCW, QVVCW*

Photo Shows a 4-Bolt Spherical Roller Bearing Flanged Cartridge Unit

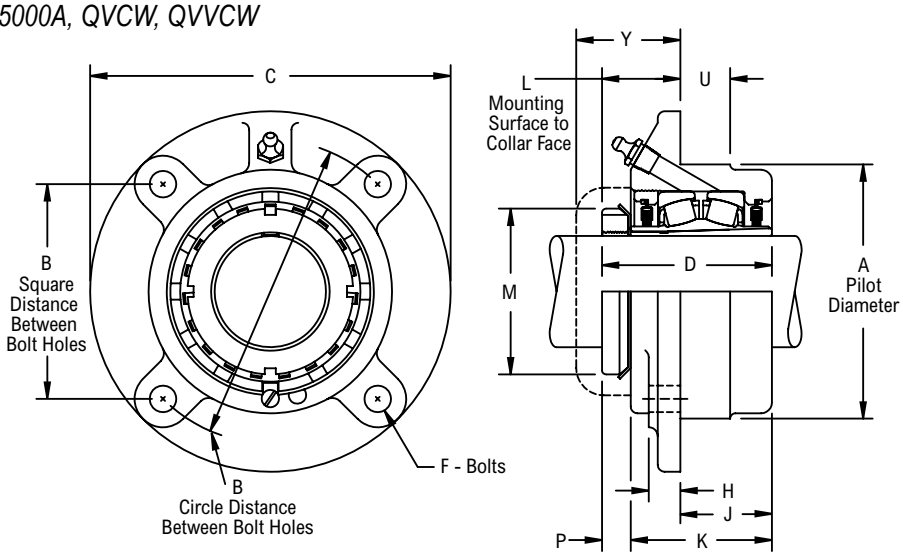

Product Features

- Self aligning type E interchange
- Corrosion-resistant powder coating
- Cast iron housing
- Misalignment capabilities - total of 4°
- Broad range of sealing options
- Factory set clearance & lubrication
- Enhanced life mounting style
- Field interchangeable seals
- See Features and Benefits for additional info on pages 132 - 133.

Bearing Dimensions

Size Code	Shaft Diameter	Part Number	A Pilot Diameter	B Distance Between Bolt Holes		L Mounting Surface to Collar Face	C	D	F Bolts	H	J	K	M	P	U	Y	Approx. Weight
				Square	Circle												
4-Bolt																	
B624	1 7/16	FCB22623H	3.625	3 3/32	4 3/8	1 17/64	5 1/4	2.71	3/8	1/2	1 3/8	2 3/16	2 1/4	29/64	3/4	1 7/8	6.00
B631	1 15/16	FCB22631H	4.500	3 51/64	5 3/8	1 31/64	6 3/8	3.08	7/16	9/16	1 9/16	2 7/16	2 31/32	39/64	7/8	1 29/32	9.00
B635	2 3/16	FCB22635H	5.000	4 1/4	6	1 1/2	7 1/8	3.16	1/2	9/16	1 9/16	2 1/2	3 5/32	5/8	1	2 1/32	12.00
B639	2 7/16	FCB22639H	5.500	4 19/32	6 1/2	1 19/32	7 5/8	3.28	1/2	5/8	1 11/16	2 5/8	3 5/8	41/64	1	2 5/32	16.00
B647	2 11/16	FCB22643H	6.375	5 19/64	7 1/2	1 53/64	8 3/4	3.86	5/8	3/4	2	3 1/8	4 5/32	45/64	1 1/4	2 5/16	25.00
	2 15/16	FCB22647H															24.00
B655	3 7/16	FCB22655H	7.375	6 3/32	8 5/8	2 25/64	10 1/4	4.29	3/4	15/16	2	3 7/16	4 15/16	57/64	1 1/4	2 25/32	37.00
B663	3 15/16	FCB22663H	8.125	6 5/8	9 3/8	2 17/32	10 7/8	4.94	3/4	1 1/8	2 1/2	4 1/8	5 7/16	59/64	2	3 1/16	50.00

Additional Notes

- Please call 1-866-REXNORD for availability
- Lubrication fitting tap size, 1/8 in PT
- Dimensions for "D", "L" & "P" based on unmounted condition
- Pilot Diameter tolerance, +.000 in/-.002 in *(+0.00 mm/-0.05 mm)*
- Bore tolerance for mounting, +.002 in/-.000 in *(+0.05 mm/-0.00 mm)*
- H labyrinth seals standard
- All size codes available with type E lip seals & E7 triple lip seals
- For the Selection Guide, Load Ratings and Speed Limits, see the Link-Belt Spherical Roller Bearings Engineering section on pages 135 - 140.
- Note: Dimensions subject to change. Certified dimensions of ordered material furnished on request.

CSEB22400

Photo Shows a Spherical Roller Bearing Cartridge Unit with Steel Housing

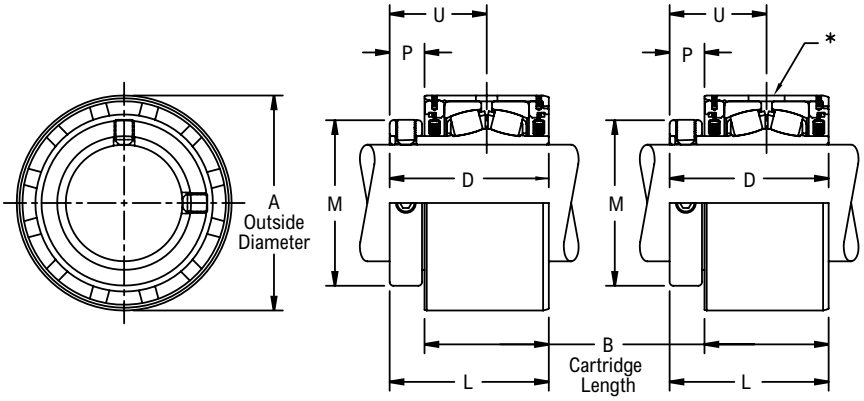

Product Features

- Steel housing
- Misalignment capabilities - total of 4°
- Broad range of sealing options
- Factory set clearance & lubrication
- Hardened spring locking collar
- Field interchangeable seals
- See Features and Benefits for additional info on pages 132 - 133.

Bearing Dimensions

Size Code	Shaft Diameter	Part Number	A Outside Diameter	B Cartridge Length	D	L	M	P	U	Approx. Weight
B416	1	CSEB22416H	2.6650	2	2 9/16	2 9/16	1 3/4	9/16	1 9/16	3.00
	25.00	*CSEB224M25H*	*67.6900*	*50.800*	*65.09*	*65.10*	*44.40*	*14.30*	*39.70*	*1.30*
B420	1 3/16	CSEB22419H	2.9150	2 1/8	2 11/16	2 11/16	1 31/32	9/16	1 5/8	4.00
	1 1/4	CSEB22420H								
	30.00	*CSEB224M30H*	*74.0400*	*53.980*	*68.26*	*68.30*	*50.00*	*14.30*	*41.30*	*1.70*
B424	1 7/16	CSEB22423H	3.1240	2 3/16	2 7/8	2 7/8	2 5/16	11/16	1 25/32	4.00
	1 1/2	CSEB22424H								
	35.00	*CSEB224M35H*	*79.3500*	*55.560*	*73.02*	*73.00*	*58.70*	*17.50*	*45.20*	*1.80*
B428	1 5/8	CSEB22426H	3.6360	2 7/16	3 1/8	3 1/8	2 19/32	11/16	1 29/32	6.00
	1 11/16	CSEB22427H								5.00
	1 3/4	CSEB22428H								
	40.00	*CSEB224M40H*	*92.3500*	*61.910*	*79.38*	*79.40*	*65.90*	*17.50*	*48.40*	*2.50*
B432	1 15/16	CSEB22431H	3.8330	2 25/64	3 1/8	3 1/8	2 7/8	23/32	1 29/32	6.00
	2	CSEB22432H								5.00
	45.00	*CSEB224M45H*	*97.3600*	*60.720*	*79.38*	*79.40*	*73.00*	*18.30*	*48.40*	*2.60*
	50.00	*CSEB224M50H*								*2.30*
B436	2 3/16	CSEB22435H	4.2270	2 1/2	3 5/16	3 5/16	3 1/4	13/16	2 1/16	7.00
	2 1/4	CSEB22436H								
	55.00	*CSEB224M55H*	*107.3600*	*63.500*	*84.14*	*84.10*	*82.60*	*20.60*	*52.40*	*3.20*
B440	2 1/4	CSEB224B36H	4.6210	2 5/8	3 1/2	3 1/2	3 9/16	7/8	2 3/16	8.00
	2 7/16	CSEB22439H								
	2 1/2	CSEB22440H								
	60.00	*CSEB224M60H*	*117.3700*	*66.680*	*88.90*	*88.90*	*90.50*	*22.20*	*55.60*	*3.90*
B448	2 11/16	CSEB22443H	5.4070	3 1/8	4	4	4 1/16	7/8	2 7/16	14.00
	2 3/4	CSEB22444H								
	2 15/16	CSEB22447H								13.00
	3	CSEB22448H								
	65.00	*CSEB224M65H*	*137.2616*	*79.380*	*101.60*	*101.60*	*103.20*	*22.20*	*61.90*	*6.60*
	70.00	*CSEB224M70H*								*6.40*
	75.00	*CSEB224M75H*								*5.90*
B456	3 3/16	CSEB22451H	6.1940	3 7/16	4 3/8	4 3/8	4 29/32	15/16	2 21/32	20.00
	3 7/16	CSEB22455H								18.00
	3 1/2	CSEB22456H								
	80.00	*CSEB224M80H*	*157.3300*	*87.310*	*111.12*	*111.10*	*124.60*	*23.80*	*67.50*	*9.00*

Continued...

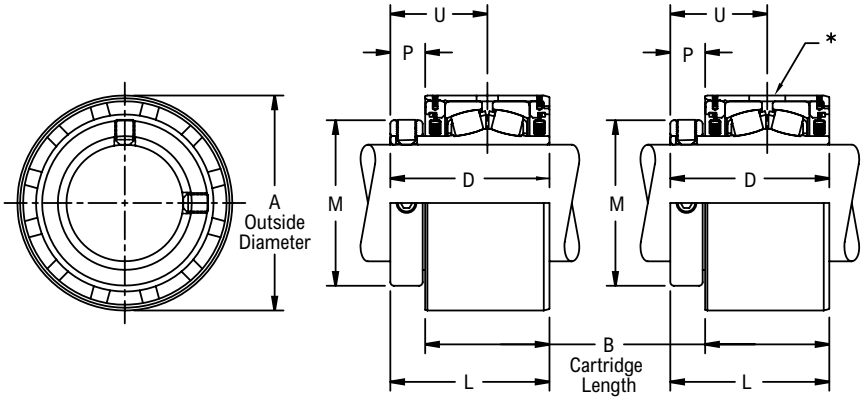

Continued...

Bearing Dimensions

Size Code	Shaft Diameter	Part Number	A Outside Diameter	B Cartridge Length	D	L	M	P	U	Approx. Weight
B456	*85.00*	*CSEB224M85H*	*157.3300*	*87.310*	*111.12*	*111.10*	*124.60*	*23.80*	*67.50*	*8.60*
B464	3 11/16	CSEB22459H	7.3750	4	5 1/16	5 1/16	5 5/8	1 1/16	3 1/16	33.00
	3 15/16	CSEB22463H								31.00
	4	CSEB22464H								
	90.00	*CSEB224M90H*	*187.3200*	*101.600*	*128.59*	*128.60*	*142.90*	*27.00*	*77.80*	*15.90*
	100.00	*CSEB224M100H*								*14.10*

Additional Notes

Please call 1-866-REXNORD for availability

O.D. tolerance, +.000 in/-.002 in *(+0.00 mm/-0.05 mm)*

Bore tolerance for mounting, +.002 in/-.000 in *(+0.05 mm/-0.00 mm)*

Expansion - is 3/8 in for all size codes

*Expansion plug diameter .531 in *(13.49 mm)*, engagement depth .125 in +/-.015 in *(3.18 mm +/-0.38 mm)*

Hole for fixed location & slot for expansion location in the same housing

H labyrinth seals standard

All size codes available with type E lip seals, except E7 in size code B416

For the Selection Guide, Load Ratings and Speed Limits, see the Link-Belt Spherical Roller Bearings Engineering section on pages 135 - 140.

Note: Dimensions subject to change. Certified dimensions of ordered material furnished on request.

CSEB22500

Photo Shows a Spherical Roller Bearing Cartridge Unit with Steel Housing

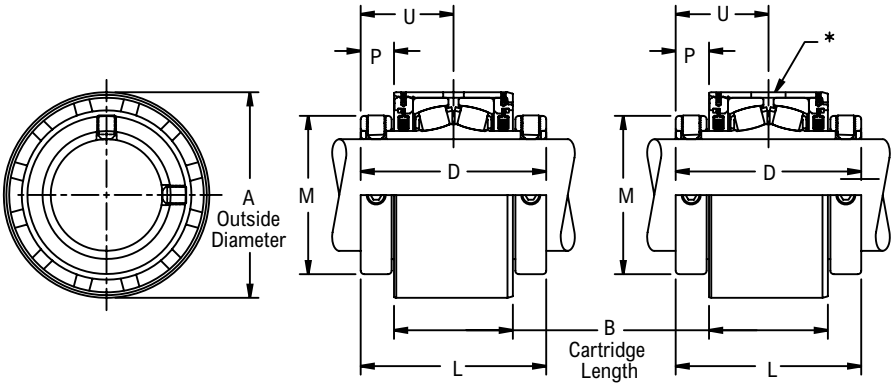

Product Features

- Steel housing
- Misalignment capabilities - total of 4°
- Broad range of sealing options
- Factory set clearance & lubrication
- Two hardened spring locking collars
- Field interchangeable seals
- See Features and Benefits for additional info on pages 132 - 133.

Bearing Dimensions

Size Code	Shaft Diameter	Part Number	A Outside Diameter	B Cartridge Length	D	L	M	P	U	Approx. Weight
B524	1 7/16	CSEB22523H	3.1240	2 3/16	3 9/16	3 9/16	2 5/16	11/16	1 25/32	4.20
B528	1 11/16	CSEB22527H	3.6360	2 7/16	3 13/16	3 13/16	2 19/32	11/16	1 29/32	5.60
B531	1 15/16	CSEB22531H	3.8330	2 25/64	3 13/16	3 13/16	2 7/8	11/16	1 29/32	6.10
B536	2	CSEB22532H	4.2270	2 1/2	4 1/8	4 1/8	3 1/4	13/16	2 1/16	9.00
	2 3/16	CSEB22535H								
B540	2 7/16	CSEB22539H	4.6210	2 5/8	4 3/8	4 3/8	3 9/16	7/8	2 3/16	10.10
B548	2 11/16	CSEB22543H	5.4070	3 1/8	4 7/8	4 7/8	4 1/16	7/8	2 7/16	16.40
	2 15/16	CSEB22547H								15.30
B556	3 7/16	CSEB22555H	6.1940	3 7/16	5 5/16	5 5/16	4 29/32	15/16	2 21/32	21.10
B564	3 15/16	CSEB22563H	7.3750	4	6 1/8	6 1/8	5 5/8	1 1/16	3 1/16	36.10
	4	CSEB22564H								35.60
B572	4 3/16	CSEB22567YH	7.9670	4 1/4	6 1/4	6 1/4	6 3/16	1	3 1/8	52.80
	4 7/16	CSEB22571YH								50.60
	4 1/2	CSEB22572YH								49.90
	110.00	*CSEB225M110YH*	*202.36*	*107.95*	*158.75*	*158.75*	*157.16*	*25.4*	*79.37*	*22.80*
	115.00	*CSEB225M115YH*								*22.50*
B580	4 15/16	CSEB22579YH	9.3427	5 9/16	7 7/8	7 7/8	7 1/16	1 5/32	3 15/16	55.30
	5	CSEB22580YH								54.70
	125.00	*CSEB225M125YH*	*237.30*	*141.28*	*200.02*	*200.02*	*174.38*	*29.37*	*100.01*	*24.60*

Additional Notes

- Please call 1-866-REXNORD for availability
- O.D. tolerance, for size codes B564 and smaller +.000 in/-.002 in *(+0.00 mm/-0.05 mm)*: for all other size codes +.000 in/-.003 in *(+0.00 mm/-0.08 mm)*
- Bore tolerance for mounting, +.002 in/-.000 in *(+0.05 mm/-0.00 mm)*
- Expansion - is 3/8 in for all size codes
- *Expansion plug diameter .531 in *(13.49 mm)*, engagement depth .125 in +/-.015 in *(3.18 mm +/-0.38 mm)*
- Hole for fixed location & slot for expansion location in the same housing
- H labyrinth seals standard
- All size codes available with type E lip seals & E7 triple lip seals
- For the Selection Guide, Load Ratings and Speed Limits, see the Link-Belt Spherical Roller Bearings Engineering section on pages 135 - 140.
- Note: Dimensions subject to change. Certified dimensions of ordered material furnished on request.

CSEB22600

Photo Shows a Spherical Roller Bearing Cartridge Unit with Steel Housing

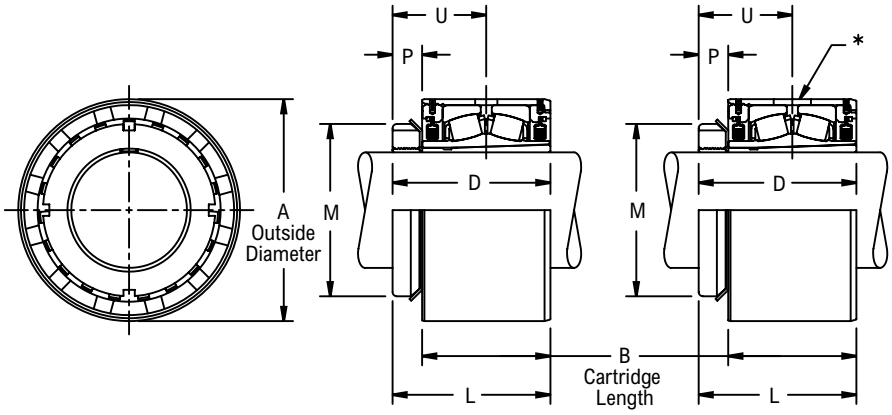

Product Features

Steel housing
Misalignment capabilities - total of 4°
Broad range of sealing options
Factory set clearance & lubrication
Enhanced life mounting style
Field interchangeable seals
See Features and Benefits for additional info on pages 132 - 133.

Bearing Dimensions

Size Code	Shaft Diameter	Part Number	A Outside Diameter	B Cartridge Length	D	L	M	P	U	Approx. Weight
B624	1 7/16	CSEB22623H	3.1240	2 3/16	2.71	2 3/4	2 1/4	1/2	1 39/64	4.00
B631	1 15/16	CSEB22631H	3.8330	2 25/64	3.08	3 1/16	2 31/32	39/64	1 55/64	5.00
B635	2 3/16	CSEB22635H	4.2270	2 1/2	3.16	3 5/32	3 5/32	5/8	1 29/32	7.00
B639	2 7/16	CSEB22639H	4.6210	2 5/8	3.28	3 19/64	3 5/8	45/64	1 31/32	8.00
B647	2 11/16	CSEB22643H	5.4070	3 1/8	3.86	3 7/8	4 5/32	55/64	2 19/64	14.00
	2 15/16	CSEB22647H								13.00
B655	3 7/16	CSEB22655H	6.1940	3 7/16	4.29	4 5/16	4 15/16	7/8	2 37/64	18.00
B663	3 15/16	CSEB22663H	7.3750	4	4.94	4 15/16	5 7/16	15/16	2 15/16	31.00

Additional Notes

Please call 1-866-REXNORD for availability
O.D. tolerance, +.000 in/-.002 in *(+0.00 mm/-0.05 mm)*
Bore tolerance for mounting, +.002 in/-.000 in *(+0.05 mm/-0.00 mm)*
Expansion - is 3/8 in for all size codes
*Expansion plug diameter .531 in *(13.49 mm)*, engagement depth .125 in +/-.015 in *(3.18 mm +/-0.38 mm)*
Hole for fixed location & slot for expansion location in the same housing

Dimensions for "D", "P" & "U" based on unmounted condition
H labyrinth seals standard
All size codes available with type E lip seals & E7 triple lip seals
For the Selection Guide, Load Ratings and Speed Limits, see the Link-Belt Spherical Roller Bearings Engineering section on pages 135 - 140.
Note: Dimensions subject to change. Certified dimensions of ordered material furnished on request.

CB22400

Photo Shows a Spherical Roller Bearing Cartridge Unit with Cast Iron Housing

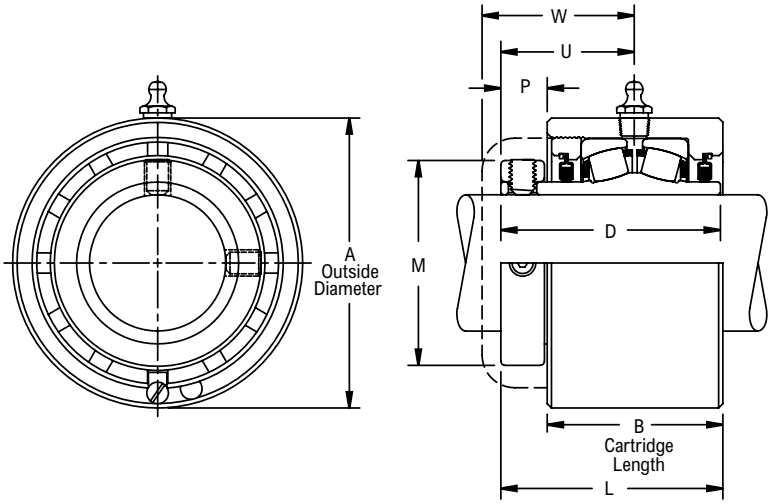

Product Features

- Corrosion resistant powder coating
- Cast iron housing
- Misalignment capabilities - total of 4°
- Broad range of sealing options
- Factory set clearance & lubrication
- Hardened spring locking collar
- Field interchangeable seals
- See Features and Benefits for additional info on pages 132 - 133.

Bearing Dimensions

Size Code	Shaft Diameter	Part Number	A Outside Diameter	B Cartridge Length	D	L	M	P	U	W	Approx. Weight
B416	1	CB22416H	3.0000	2	2 9/16	2 19/32	1 3/4	17/32	1 9/16	1 29/32	3.00
	25.00	*CB224M25H*	*76.2000*	*50.800*	*65.09*	*65.90*	*44.40*	*13.50*	*39.70*	*48.40*	*1.40*
B420	1 3/16	CB22419H	3.2190	2 1/8	2 11/16	2 23/32	1 31/32	17/32	1 5/8	1 31/32	4.00
	1 1/4	CB22420H									
	30.00	*CB224M30H*	*81.7600*	*53.980*	*68.26*	*69.00*	*50.00*	*13.50*	*41.30*	*50.00*	*1.70*
B424	1 7/16	CB22423H	3.4370	2 3/16	2 7/8	2 29/32	2 5/16	21/32	1 25/32	2 3/16	4.00
	1 1/2	CB22424H									
	35.00	*CB224M35H*	*87.3000*	*55.560*	*73.02*	*73.80*	*58.70*	*16.70*	*45.20*	*55.60*	*2.10*
B428	1 5/8	CB22426H	3.9370	2 7/16	3 1/8	3 5/32	2 19/32	21/32	1 29/32	2 1/4	6.00
	1 11/16	CB22427H									
	1 3/4	CB22428H									
	40.00	*CB224M40H*	*100.0000*	*61.910*	*79.38*	*80.20*	*65.90*	*16.70*	*48.40*	*57.20*	*2.90*
B432	1 15/16	CB22431H	4.1250	2 7/16	3 1/8	3 5/32	2 7/8	21/32	1 29/32	2 9/32	6.00
	2	CB22432H									
	45.00	*CB224M45H*	*104.7800*	*61.910*	*79.38*	*80.20*	*73.00*	*16.70*	*48.40*	*57.90*	*3.10*
	50.00	*CB224M50H*									*3.00*
B436	2 3/16	CB22435H	4.5310	2 9/16	3 5/16	3 11/32	3 1/4	25/32	2 1/16	2 7/16	8.00
	2 1/4	CB22436H									
	55.00	*CB224M55H*	*115.0900*	*65.090*	*84.14*	*84.90*	*82.60*	*19.80*	*52.40*	*61.90*	*3.80*
B440	2 7/16	CB22439H	5.0000	2 5/8	3 1/2	3 17/32	3 9/16	27/32	2 3/16	2 9/16	10.00
	2 1/2	CB22440H									
	60.00	*CB224M60H*	*127.0000*	*66.680*	*88.90*	*89.70*	*90.50*	*21.40*	*55.60*	*65.10*	*4.80*
B448	2 11/16	CB22443H	5.8750	3 1/8	4	4 1/32	4 1/16	27/32	2 7/16	2 25/32	18.00
	2 3/4	CB22444H									17.00
	2 15/16	CB22447H									16.00
	3	CB22448H									
	65.00	*CB224M65H*	*149.2200*	*79.380*	*101.60*	*102.40*	*103.20*	*21.40*	*61.90*	*70.60*	*8.10*
	70.00	*CB224M70H*									*8.00*
	75.00	*CB224M75H*									*7.80*
B456	3 3/16	CB22451H	6.7500	3 7/16	4 3/8	4 3/8	4 29/32	15/16	2 21/32	3	25.00
	3 7/16	CB22455H									23.00
	3 1/2	CB22456H									
	80.00	*CB224M80H*	*171.4500*	*87.310*	*111.12*	*111.10*	*124.60*	*23.80*	*67.50*	*76.20*	*11.20*
	85.00	*CB224M85H*									*11.00*

Additional Notes

- Please call 1-866-REXNORD for availability
- Lubrication fitting tap size, 1/8 in PT
- O.D. tolerance, +.000 in/-.002 in *(+0.00 mm/-0.05 mm)*
- Bore tolerance for mounting, +.002 in/-.000 in *(+0.05 mm/-0.00 mm)*
- H labyrinth seals standard
- All size codes available with type E lip seals, except E7 in size code B416

For the Selection Guide, Load Ratings and Speed Limits, see the Link-Belt Spherical Roller Bearings Engineering section on pages 135 - 140.

Note: Dimensions subject to change. Certified dimensions of ordered material furnished on request.

CB22600

Photo Shows a Spherical Roller Bearing Cartridge Unit with Cast Iron Housing

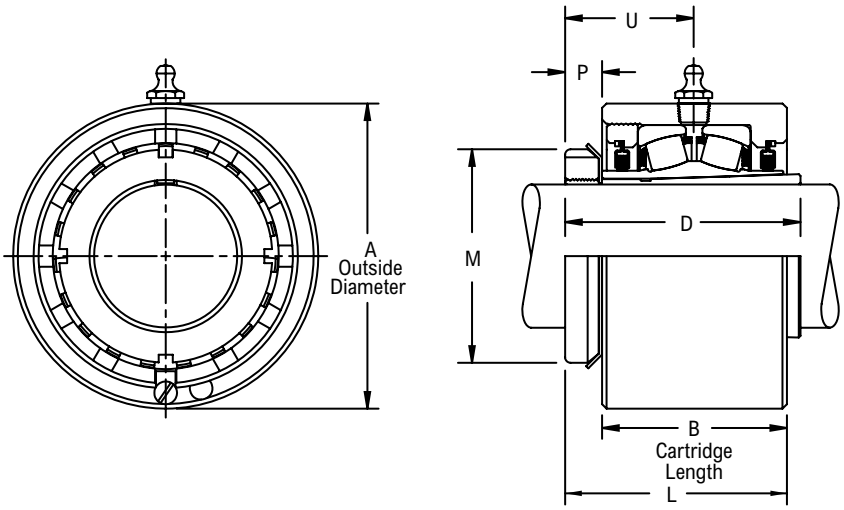

Product Features

- Corrosion resistant powder coating
- Cast iron housing
- Misalignment capabilities - total of 4°
- Broad range of sealing options
- Factory set clearance & lubrication
- Enhanced life mounting style
- Field interchangeable seals
- See Features and Benefits for additional info on pages 132 - 133.

Bearing Dimensions

Size Code	Shaft Diameter	Part Number	A Outside Diameter	B Cartridge Length	D	L	M	P	U	Approx. Weight
B624	1 7/16	CB22623H	3.4370	2 3/16	2.71	2 13/16	2 1/4	9/16	1 43/64	4.00
B631	1 15/16	CB22631H	4.1250	2 7/16	3.08	3 11/64	2 31/32	43/64	1 55/64	6.00
B635	2 3/16	CB22635H	4.5310	2 9/16	3.16	3 7/32	3 5/32	21/32	1 29/32	8.00
B639	2 7/16	CB22639H	5.0000	2 5/8	3.28	3 25/64	3 5/8	43/64	2 3/64	10.00
B647	2 11/16	CB22643H	5.8750	3 1/8	3.86	4	4 5/32	3/4	2 19/64	18.00
	2 15/16	CB22647H								16.00
B655	3 7/16	CB22655H	6.7500	3 7/16	4.29	4 3/8	4 15/16	7/8	2 9/16	23.00

Additional Notes

- Please call 1-866-REXNORD for availability
- Lubrication fitting tap size, 1/8 in PT
- Dimensions for “D”, “P” & “U” based on unmounted condition
- O.D. tolerance, +.000 in/-.002 in *(+0.00 mm/-0.05 mm)*
- Bore tolerance for mounting, +.002 in/-.000 in *(+0.05 mm/-0.00 mm)*
- H labyrinth seals standard
- All size codes available with type E lip seals & E7 triple lip seals
- For the Selection Guide, Load Ratings and Speed Limits, see the Link-Belt Spherical Roller Bearings Engineering section on pages 135 - 140.
- Note: Dimensions subject to change. Certified dimensions of ordered material furnished on request.

TB22400

Interchange: *WSTUS2, WSTUE, TBR, USTU5000, QATU, ETUTRB*

Photo Shows a Spherical Roller Bearing Take-up Unit

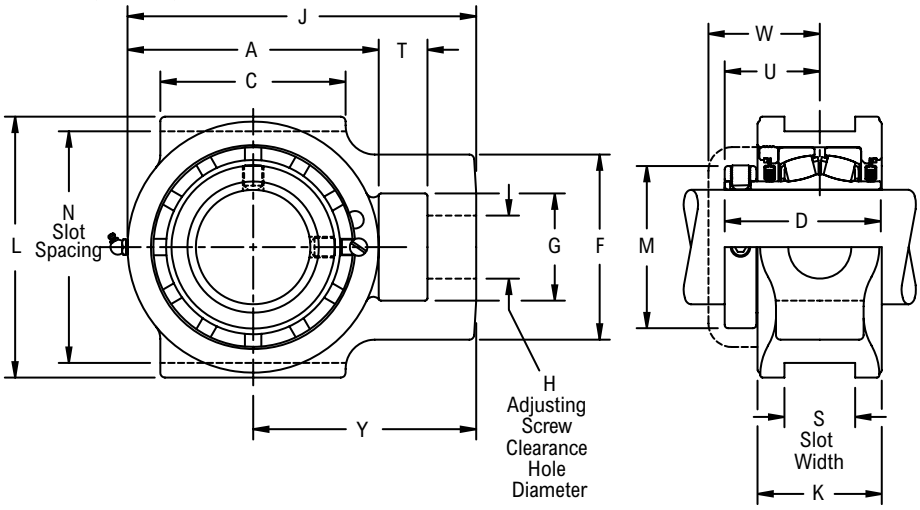

Product Features

- Corrosion-resistant powder coating
- Cast iron housing
- Misalignment capabilities - total of 4°
- Broad range of sealing options
- Factory set clearance & lubrication
- Hardened spring locking collar
- Field interchangeable seals
- See Features and Benefits for additional info on pages 132 - 133.

Bearing Dimensions

Size Code	Shaft Diameter	Part Number	H Adjusting Screw Hole Diameter	N Slot Spacing	S Slot Width	A	C	D	F	G	J	K	L	M	T	U	W	Y	Approx. Weight
B416	1	TB22416H	3/4	3.000	0.531	3	2 1/4	2 9/16	2	1 1/4	4 1/16	2	3 5/8	1 3/4	5/8	1 9/16	1 29/32	2 9/16	4.40
	25.00	*TB224M25H*	*19.10*	*76.200*	*13.490*	*76.20*	*57.20*	*65.09*	*50.80*	*31.80*	*103.20*	*50.80*	*92.10*	*44.40*	*15.90*	*39.70*	*48.40*	*65.10*	*2.00*
B420	1 3/16	TB22419H	7/8	3.500	0.531	3 3/8	2 1/2	2 11/16	2 5/16	1 7/16	4 9/16	2 1/8	4 1/8	1 31/32	5/8	1 5/8	1 31/32	2 7/8	5.70
	1 1/4	TB22420H																	5.60
	30.00	*TB224M30H*	*22.20*	*88.900*	*13.490*	*85.73*	*63.50*	*68.26*	*58.70*	*36.50*	*115.90*	*53.90*	*104.80*	*50.00*	*15.90*	*41.30*	*50.00*	*73.00*	*2.60*
B424	1 7/16	TB22423H	7/8	3.500	0.531	3 3/4	2 3/4	2 7/8	2 3/8	1 7/16	5 1/16	2 3/16	4 1/8	2 5/16	5/8	1 25/32	2 3/16	3 1/4	6.40
	1 1/2	TB22424H																	
	35.00	*TB224M35H*	*22.20*	*88.900*	*13.490*	*95.25*	*69.80*	*73.02*	*60.30*	*36.50*	*128.60*	*55.60*	*104.80*	*58.70*	*15.90*	*45.20*	*55.60*	*82.60*	*2.90*
B428	1 5/8	TB22426H	1 1/8	4.000	0.687	4 1/4	3 1/4	3 1/8	3 3/16	1 15/16	5 15/16	2 7/16	4 3/4	2 19/32	3/4	1 29/32	2 1/4	3 13/16	9.70
	1 11/16	TB22427H																	9.50
	1 3/4	TB22428H																	
	40.00	*TB224M40H*	*28.60*	*101.600*	*17.460*	*107.95*	*82.60*	*79.38*	*81.00*	*49.20*	*150.80*	*61.90*	*120.60*	*65.90*	*19.00*	*48.40*	*57.20*	*96.80*	*4.50*
B432	1 15/16	TB22431H	1 1/8	4.000	0.687	4 1/2	3 3/8	3 1/8	3 3/16	1 15/16	6 3/16	2 7/16	4 1/2	2 7/8	3/4	1 29/32	2 9/32	3 15/16	9.90
	2	TB22432H																	9.70
	45.00	*TB224M45H*	*28.60*	*101.600*	*17.460*	*114.30*	*85.70*	*79.38*	*81.00*	*49.20*	*157.20*	*61.90*	*114.30*	*73.00*	*19.00*	*48.40*	*57.90*	*100.00*	*4.70*
	50.00	*TB224M50H*																	
B436	2 3/16	TB22435H	1 3/8	4.500	0.813	5	3 3/4	3 5/16	3 3/4	2 1/4	7 1/8	2 1/2	5 1/4	3 1/4	1 1/4	2 1/16	2 7/16	4 5/8	14.10
	2 1/4	TB22436H																	
	55.00	*TB224M55H*	*34.90*	*114.300*	*20.640*	*127.00*	*95.20*	*84.14*	*95.20*	*57.20*	*181.00*	*63.50*	*133.40*	*82.60*	*31.80*	*52.40*	*61.90*	*117.50*	*6.80*
B440	2 7/16	TB22439H	1 3/8	5.125	1.063	5 1/2	4	3 1/2	4 1/8	2 1/4	7 13/16	2 5/8	5 7/8	3 9/16	1 1/4	2 3/16	2 9/16	5 1/16	18.00
	2 1/2	TB22440H																	17.80
	60.00	*TB224M60H*	*34.90*	*130.180*	*26.990*	*139.70*	*101.60*	*88.90*	*104.80*	*57.20*	*198.40*	*66.70*	*149.20*	*90.50*	*31.80*	*55.60*	*65.10*	*128.60*	*8.30*
B448	2 11/16	TB22443H	1 5/8	5.937	1.812	6 7/16	4 3/4	4	4 3/4	2 3/4	9 1/8	3 1/8	6 11/16	4 1/16	1 1/2	2 7/16	2 25/32	5 15/16	23.60
	2 3/4	TB22444H																	23.50
	2 15/16	TB22447H																	23.00
	3	TB22448H																	22.90
	65.00	*TB224M65H*	*41.30*	*150.810*	*46.020*	*163.50*	*120.60*	*101.60*	*120.60*	*69.80*	*231.80*	*79.40*	*169.90*	*103.20*	*38.10*	*61.90*	*70.60*	*150.80*	*10.60*
	70.00	*TB224M70H*																	*10.30*
	75.00	*TB224M75H*																	*10.20*
B456	3 7/16	TB22455H	1 7/8	6.812	1.812	7 3/8	5 1/2	4 3/8	4 7/8	2 7/8	10	3 7/16	7 13/16	4 29/32	1 5/8	2 21/32	3	6 5/16	43.50
	3 1/2	TB22456H																	43.10
	80.00	*TB224M80H*	*47.60*	*173.020*	*46.020*	*187.30*	*139.70*	*111.12*	*123.80*	*73.00*	*254.00*	*87.30*	*198.40*	*124.60*	*41.30*	*67.50*	*76.20*	*160.30*	*20.50*
	85.00	*TB224M85H*																	*20.00*
B464	3 15/16	TB22463H	2 1/8	8.625	2.062	8 7/8	7	5 1/16	5 1/4	3 1/8	12 1/8	4 1/8	9 7/16	5 5/8	2 1/8	3 1/16	3 7/16	7 11/16	77.00
	4	TB22464H																	76.00
	90.00	*TB224M90H*	*53.98*	*219.080*	*52.370*	*225.40*	*177.80*	*128.59*	*133.40*	*79.40*	*308.00*	*104.80*	*239.70*	*142.90*	*54.00*	*77.80*	*87.30*	*195.30*	*34.90*
	100.00	*TB224M100H*																	*34.50*

Additional Notes

- Please call 1-866-REXNORD for availability
- Lubrication fitting tap size, 1/8" PT
- Take-up slot spacing & width tolerance, +.005 in/-.015 in *(+0.13 mm/-0.38 mm)*
- H labyrinth seals standard
- All size codes available with type E lip seals, except E7 in size code B416

For the Selection Guide, Load Ratings and Speed Limits, see the Link-Belt Spherical Roller Bearings Engineering section on pages 135 - 140.

Note: Dimensions subject to change. Certified dimensions of ordered material furnished on request.

TB22600

Interchange: *WSTUIP, USTU5000A, QVVTU*

Photo Shows a Spherical Roller Bearing Take-up Unit

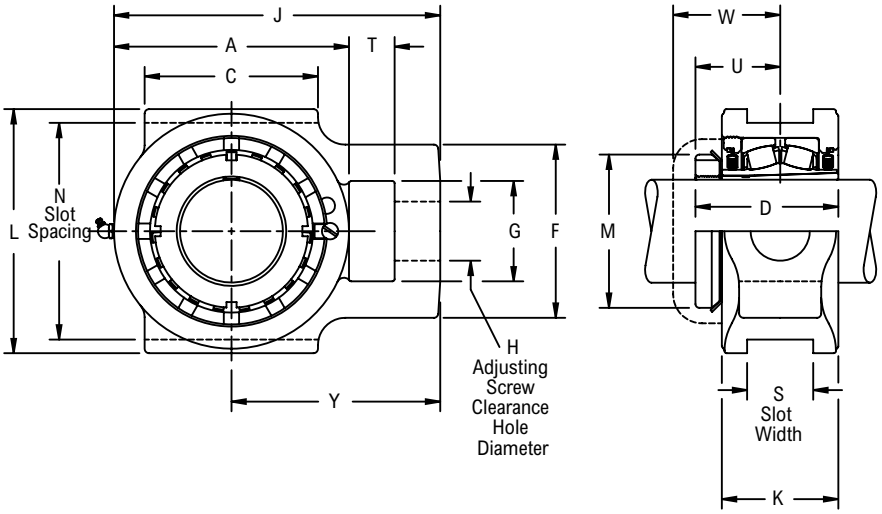

Product Features

- Corrosion-resistant powder coating
- Cast iron housing
- Misalignment capabilities - total of 4°
- Broad range of sealing options
- Factory set clearance & lubrication
- Enhanced life mounting style
- Field interchangeable seals
- See Features and Benefits for additional info on pages 132 - 133.

Bearing Dimensions

Size Code	Shaft Diameter	Part Number	H Adjusting Screw Hole Diameter	N Slot Spacing	S Slot Width	A	C	D	F	G	J	K	L	M	T	U	W	Y	Approx. Weight
B624	1 7/16	TB22623H	7/8	3.500	0.531	3 3/4	2 3/4	2.71	2 3/8	1 7/16	5 1/16	2 3/16	4 1/8	2 1/4	5/8	1 39/64	2 3/16	3 1/4	6.40
B631	1 15/16	TB22631H	1 1/8	4.000	0.687	4 1/2	3 3/8	3.08	3 3/16	1 15/16	6 3/16	2 7/16	4 1/2	2 31/32	3/4	1 55/64	2 9/32	3 15/16	9.70
B635	2 3/16	TB22635H	1 3/8	4.500	0.813	5	3 3/4	3.16	3 3/4	2 1/4	7 1/8	2 1/2	5 1/4	3 5/32	1 1/4	1 29/32	2 7/16	4 5/8	14.10
B639	2 7/16	TB22639H	1 3/8	5.125	1.063	5 1/2	4	3.28	4 1/8	2 1/4	7 13/16	2 5/8	5 7/8	3 5/8	1 1/4	1 31/32	2 9/16	5 1/16	17.80
B647	2 11/16	TB22643H	1 5/8	5.937	1.812	6 7/16	4 3/4	3.86	4 3/4	2 3/4	9 1/8	3 1/8	6 11/16	4 5/32	1 1/2	2 19/64	2 25/32	5 15/16	13.50
	2 15/16	TB22647H																	13.00
B655	3 7/16	TB22655H	1 7/8	6.812	1.812	7 3/8	5 1/2	4.29	4 7/8	2 7/8	10	3 7/16	7 13/16	4 15/16	1 5/8	2 37/64	3	6 5/16	43.10
B663	3 15/16	TB22663H	2 1/8	8.625	2.062	8 7/8	7	4.94	5 1/4	3 1/8	12 1/8	4 1/8	9 7/16	5 7/16	2 1/8	2 15/16	3 7/16	7 11/16	76.00

Additional Notes

- Please call 1-866-REXNORD for availability
- Lubrication fitting tap size, 1/8" PT
- Dimensions for "D" & "U" based on unmounted condition
- Take-up slot spacing & width tolerance, +.005 in/-.015 in *(+0.13 mm/-0.38 mm)*
- H labyrinth seals standard
- All size codes available with type E lip seals & E7 triple lip seals

For the Selection Guide, Load Ratings and Speed Limits, see the Link-Belt Spherical Roller Bearings Engineering section on pages 135 - 140.

Note: Dimensions subject to change. Certified dimensions of ordered material furnished on request.

ETPB22400

Interchange: *TPHUS2, TPE, USTA5000, ETTUTRB*

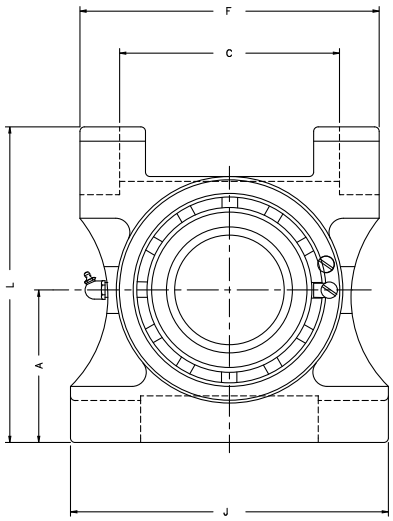

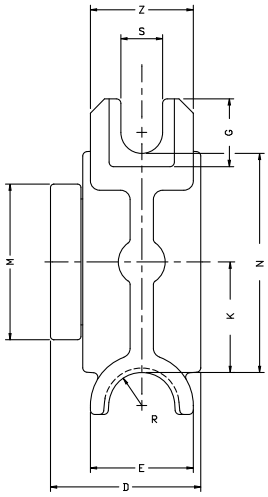

Product Features

- Cast iron Type E housing
- Corrosion resistant powder coating
- Misalignment capabilities - Total of 4°
- Broad range of sealing options
- Factory set clearance & lubrication
- Field interchangeable seals
- See Features and Benefits for additional info on pages 132 - 133.

Bearing Dimensions

Size Code	Shaft Diameter	Part Number	A Base to Centerline Height	C	D	E	F	G	J	K	L	M	N	R	S	Z	Approx. Weight
B432	1 15/16	ETPB22431H	3 7/32	4 1/2	3 1/8	2 3/8	6	1 3/8	6 1/2	2	6 7/16	2 7/8	4	13/16	15/16	2 13/32	15.00
	2	ETPB22432H															
B436	2 3/16	ETPB22435H	3 15/32	5 1/4	3 5/16	2 7/16	6 3/4	1 13/32	7	2 1/4	6 29/32	3 1/4	4 1/2	13/16	15/16	2 5/8	15.00
B440	2 7/16	ETPB22439H	3 1/2	4 7/8	3 1/2	2 3/4	7	1 25/32	7 1/2	2 3/8	7 3/8	3 9/16	4 13/16	7/8	1 3/32	2 3/4	21.00
	2 1/2	ETPB22440H															
B448	2 15/16	ETPB22447H	4 5/64	5 7/8	4	2 3/4	8	1 13/16	8 1/2	2 31/32	8 7/16	4 1/16	5 13/16	7/8	1 3/32	3 5/32	29.00
	3	ETPB22448H															
B456	3 7/16	ETPB22455H	4 1/2	6 7/16	4 3/8	2 3/4	8 15/16	2 3/64	9 3/8	3 1/2	9 1/2	4 29/32	6 3/4	7/8	1 3/8	3 7/16	41.00
B464	3 15/16	ETPB22463H	5 1/2	8	5 1/16	3 1/8	10 1/2	2 1/16	11	3 15/16	10 15/16	5 5/8	7 21/32	15/16	1 3/8	4	68.00

Additional Notes

- Please call 1-866-REXNORD for availability
- Lubrication fitting tap size, 1/8" PT
- H labyrinth seals standard
- All size codes available with type E lip seals & E7 triple lip seals

For the Selection Guide, Load Ratings and Speed Limits, see the Link-Belt Spherical Roller Bearings Engineering section on pages 135 - 140.

Note: Dimensions subject to change. Certified dimensions of ordered material furnished on request.

DSB22400

Photo Shows a Hinged Top, Welded Steel Conveyor Take-up Frame with Spherical Roller Bearing Take-up Unit

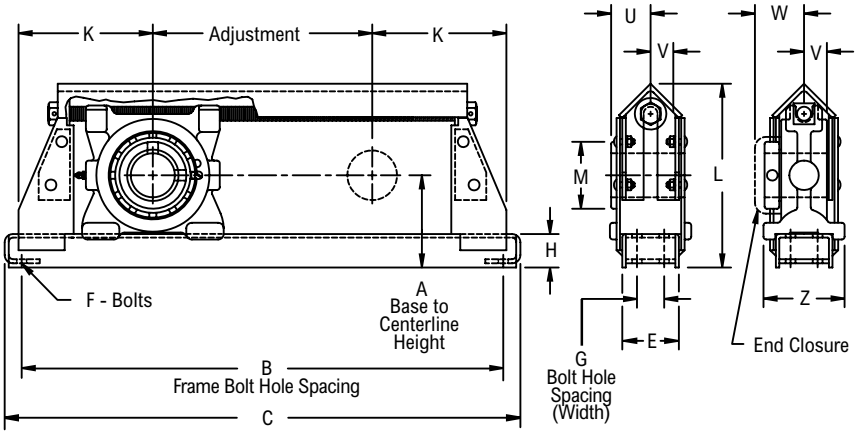

Product Features

- Protected screw type frame
- Corrosion-resistant powder coating
- Cast iron housing
- Misalignment capabilities - total of 4°
- Broad range of sealing options
- Factory set clearance & lubrication
- Field interchangeable seals
- See Features and Benefits for additional info on pages 132 - 133.

Bearing Dimensions

Size Code	Shaft Diameter	Complete Take-up Assembly	Travel Length	A Base to Centerline Height	B Frame Bolt Hole Spacing	G Bolt Hole Spacing (Width)	C	E	F	H	K	L	M	U	V	W	Z	Adjust.	Approx. Weight
B432	1 15/16	DSB22431H	12 18 24	3 15/16	26 1/2 32 1/2 38 1/2	-	28 1/2 34 1/2 40 1/2	3	5/8	1 3/4	7 1/4	8 1/4	2 7/8	1 29/32	1 1/4	2 9/32	4 1/8	12 18 24	43 49 54
	45.00	*DSB224M45H*	*12*	*100.00*	*673.1*	-	*723.9*	*76.20*	*16.00*	*44.40*	*184.20*	*209.60*	*73.00*	*48.40*	*31.80*	*57.90*	*104.80*	*304.8*	*19.5*
	50.00	*DSB224M50H*	*18* *24*		*825.5* *977.9*		*876.3* *1028.7*											*457.2* *609.6*	*22.2* *24.5*
B436	2 3/16	DSB22435H	12 18 24	4 3/16	27 1/2 33 1/2 39 1/2	-	29 1/2 35 1/2 41 1/2	3	5/8	1 3/4	7 3/4	8 11/16	3 1/4	2 1/16	1 9/32	2 7/16	4 1/8	12 18 24	49 55 60
	55.00	*DSB224M55H*	*12* *18* *24*	*106.40*	*698.5* *850.9* *1003.3*	-	*749.3* *901.7* *1054.1*	*76.20*	*16.00*	*44.40*	*196.80*	*220.70*	*82.60*	*52.40*	*32.50*	*61.90*	*104.80*	*304.8* *457.2* *609.6*	*22.2* *24.9* *27.2*
B440	2 7/16	DSB22439H	12 18 24 30	4 3/8	28 1/2 34 1/2 40 1/2 46 1/2	-	30 1/2 36 1/2 42 1/2 48 1/2	3	3/4	1 3/4	8 1/4	9 1/8	3 9/16	2 3/16	1 3/8	2 9/16	4 1/8	12 18 24 30	55 61 66 71
	60.00	*DSB224M60H*	*12* *18* *24* *30*	*111.10*	*723.9* *876.3* *1028.7* *1181.1*	-	*774.7* *927.1* *1079.5* *1231.9*	*76.20*	*20.00*	*44.40*	*209.60*	*231.80*	*90.50*	*55.60*	*34.90*	*65.10*	*104.80*	*304.8* *457.2* *609.6* *762.0*	*24.9* *27.2* *29.9* *32.2*
B448	2 15/16	DSB22447H	12 18 24 30	5 1/8	30 1/2 36 1/2 42 1/2 48 1/2	2	32 1/2 38 1/2 44 1/2 50 1/2	4	5/8	2	9 1/4	10 5/8	4 1/16	2 7/16	1 5/8	2 25/32	5 1/8	12 18 24 30	80 89 97 105
	65.00	*DSB224M65H*	*12*	*130.20*	*774.4*	*50.80*	*825.5*	*101.60*	*16.00*	*50.80*	*235.00*	*269.90*	*103.20*	*61.90*	*41.30*	*70.60*	*130.20*	*304.8*	*36.3*
	70.00	*DSB224M70H*	*18*		*927.1*		*977.9*											*457.2*	*40.4*
	75.00	*DSB224M75H*	*24* *30*		*1079.5* *1231.9*		*1130.3* *1282.7*											*609.6* *762.0*	*44.4* *47.6*
B456	3 7/16	DSB22455H	12 18 24 30	5 5/8	32 38 44 50	2	34 1/4 40 1/4 46 1/4 52 1/4	4	3/4	2	10	11 13/16	4 29/32	2 21/32	1 23/32	3	5 5/8	12 18 24 30	107 116 124 132
	80.00	*DSB224M80H*	*12*	*142.90*	*812.8*	*50.80*	*870.0*	*101.60*	*20.00*	*50.80*	*254.00*	*300.00*	*124.60*	*67.50*	*43.60*	*76.20*	*142.90*	*304.8*	*48.5*
	85.00	*DSB224M85H*	*18* *24* *30*		*965.2* *1117.6* *1270.0*		*1022.4* *1174.8* *1327.2*											*457.2* *609.6* *762.0*	*52.6* *56.2* *59.9*
B464	3 15/16	DSB22463H	12 18 24 30	7	36 42 48 54	2 1/2	38 1/2 44 1/2 50 1/2 56 1/2	5	3/4	2 1/4	12	14 11/16	5 5/8	3 1/16	2	3 7/16	6 7/8	12 18 24 30	180 192 202 212
	90.00	*DSB224M90H*	*12*	*177.80*	*914.4*	*63.50*	*977.9*	*127.00*	*20.00*	*57.20*	*304.80*	*373.10*	*142.90*	*77.80*	*50.80*	*87.30*	*174.60*	*304.8*	*81.6*
	100.00	*DSB224M100H*	*18* *24* *30*		*1066.8* *1219.2* *1371.6*		*1120.3* *1282.7* *1435.1*											*457.2* *609.6* *762.0*	*87.1* *91.6* *96.2*

Additional Notes

- Please call 1-866-REXNORD for availability
- Lubrication fitting tap size, 1/8" PT
- For size code B464, frame has hinged top construction
- Frames with 18 in *(457.20 mm)* adjustment or more have center supporting pad welded to bottom of frame
- H labyrinth seals standard
- All size codes available with type E lip seals & E7 triple lip seals
- For the Selection Guide, Load Ratings and Speed Limits, see the Link-Belt Spherical Roller Bearings Engineering section on pages 135 - 140.
- Note: Dimensions subject to change. Certified dimensions of ordered material furnished on request.

DSHB22500

Photo Shows a Hinged Top, Extra Strength Welded Steel Conveyor Take-up Frame with Spherical Roller Bearing Take-up Unit

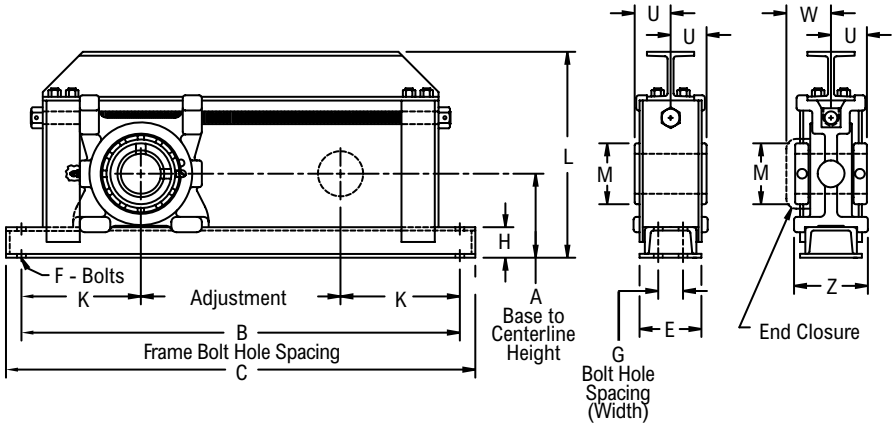

Product Features

- Extra strength welded steel frame
- Corrosion-resistant powder coating
- Cast iron housing
- Misalignment capabilities - total of 4°
- Broad range of sealing options
- Factory set clearance & lubrication
- Field interchangeable seals
- See Features and Benefits for additional info on pages 132 - 133.

Bearing Dimensions

Size Code	Shaft Diameter	Complete Take-up Assembly	Travel Length	A Base to Centerline Height	B Frame Bolt Hole Spacing	G Bolt Hole Spacing (Width)	C	E	F	H	K	L	M	U	W	Z	Adjust.	Approx. Weight
B531	1 15/16	DSHB22531H	12 18 24	3 15/16	27 1/2 33 1/2 39 1/2	-	29 1/2 35 1/2 41 1/2	3 1/2	5/8	1 3/4	7 3/4	10 5/8	2 7/8	1 29/32	2 9/32	4 1/8	12 18 24	78 88 98
B536	2 3/16	DSHB22535H	12 18 24	4 7/16	27 1/2 33 1/2 39 1/2	-	29 1/2 35 1/2 41 1/2	4 1/2	5/8	2	7 3/4	11 1/4	3 1/4	2 1/16	2 7/16	5 1/4	12 18 24	83 93 103
B540	2 7/16	DSHB22539H	12 18 24	4 5/8	28 1/2 34 1/2 40 1/2	-	30 1/2 36 1/2 42 1/2	4 1/2	3/4	2	8 1/4	12 13/16	3 9/16	2 3/16	2 9/16	5 1/4	12 18 24	105 118 132
B548	2 15/16	DSHB22547H	12 18 24 30 36	5 1/8	30 1/2 36 1/2 42 1/2 48 1/2 54 1/2	2	32 1/2 38 1/2 44 1/2 50 1/2 56 1/2	4 1/2	5/8	2	9 1/4	13 15/16	4 1/16	2 7/16	2 25/32	5 1/4	12 18 24 30 36	125 140 155 170 185
B556	3 7/16	DSHB22555H	12 18 24 30 36	5 5/8	32 38 44 50 56	2	34 1/4 40 1/4 46 1/4 52 1/4 58 1/4	4 1/2	3/4	2	10	15 1/16	4 29/32	2 21/32	3	5 5/8	12 18 24 30 36	146 162 178 194 210
B564	3 15/16	DSHB22563H	12 18 24 30 36	7	36 42 48 54 60	2 1/2	38 1/2 44 1/2 50 1/2 56 1/2 62 1/2	5 1/2	3/4	2 1/4	12	17 1/16	5 5/8	3 1/16	3 7/16	6 7/8	12 18 24 30 36	260 278 296 314 332

Additional Notes

- Please call 1-866-REXNORD for availability
- Lubrication fitting tap size, 1/8" PT
- H labyrinth seals standard
- All size codes available with type E lip seals & E7 triple lip seals
- For the Selection Guide, Load Ratings and Speed Limits, see the Link-Belt Spherical Roller Bearings Engineering section on pages 135 - 140.

Note: Dimensions subject to change. Certified dimensions of ordered material furnished on request.

LHD FRAME

Photo Shows a Protected Screw Type Frame

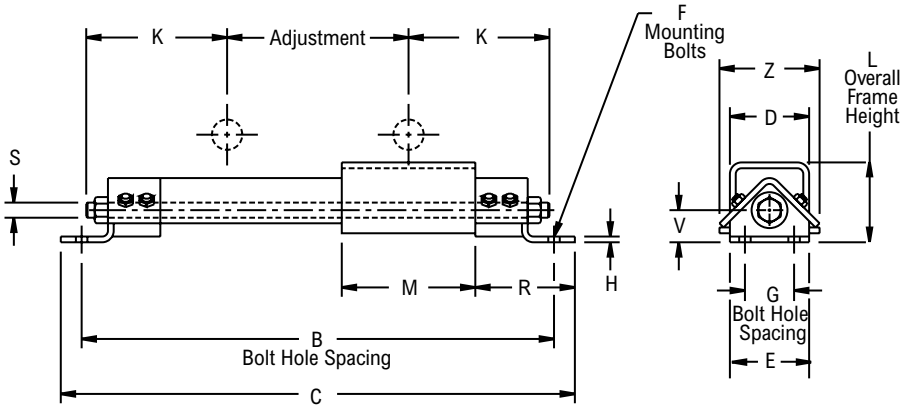

Product Features

Protected screw type frame
Welded steel frame

Bearing Dimensions

Size Code	Available Shaft Sizes: PB/PKB 22400/22600 Series	PB22500 Series	EPB22400/ 22500/22600 Series	Part Number	Adjustment Length	B Bolt Hole Spacing	G Bolt Hole Spacing in Width Direction	L Overall Frame Height	C	D	E	F	H	K	M	R	S	V	Z	Approx. Weight
LHD20	1 3/16-2 1/2	1 7/16-2 7/16	1 7/16-2 1/2	LHD2012	12	29	2 1/2	5 1/4	31	4	5	5/8	1/4	8 1/2	11	4	3/4	2	6 1/4	48.00
				LHD2018	18	35			37											52.00
				LHD2024	24	41			43											56.00
				LHD2030	30	47			49											65.00
				LHD2036	36	53			55											70.00
				LHD2048	48	65			67											81.00
LHD25	2 11/16-3	2 11/16-2 15/16	2 11/16-3	LHD2512	12	32 3/4	3	6 1/4	35 1/4	5	5 1/2	5/8	3/8	10 3/8	13 1/4	5	1	2 9/16	7 1/8	81.00
				LHD2518	18	38 3/4			41 1/4											100.00
				LHD2524	24	44 3/4			47 1/4											110.00
				LHD2530	30	50 3/4			53 1/4											115.00
				LHD2536	36	56 3/4			59 1/4											120.00
				LHD2548	48	68 3/4			71 1/4											127.00
LHD30	3 3/16-3 1/2	3 7/16	-	LHD3012	12	35 1/2	3	7	38 1/4	6	6 1/2	3/4	1/2	11 3/4	14 1/4	6	1	2 1/2	9	158.00
				LHD3018	18	41 1/2			44 1/4											162.00
				LHD3024	24	47 1/2			50 1/4											166.00
				LHD3030	30	53 1/2			56 1/4											173.00
				LHD3036	36	59 1/2			62 1/4											183.00
				LHD3048	48	71 1/2			74 1/4											214.00
LHD35	3 11/16-4	3 15/16-4 1/2	3 3/16-3 1/2	LHD3512	12	37 1/4	3	7	40	6	6 1/2	3/4	1/2	12 5/8	16	6	1 1/4	2 1/2	9	173.00
				LHD3518	18	43 1/4			46											190.00
				LHD3524	24	49 1/4			52											195.00
				LHD3530	30	55 1/4			58											200.00
				LHD3536	36	61 1/4			64											210.00
				LHD3548	48	73 1/4			76											234.00
LHD40	-	4 15/16-5	-	LHD4012	12	41 1/4	3	7	44	7	6 1/2	3/4	1/2	14 5/8	20	6	1 1/2	2 1/2	9 13/16	175.00
				LHD4018	18	47 1/4			50											220.00
				LHD4024	24	53 1/4			56											265.00
				LHD4030	30	59 1/4			62											270.00
				LHD4036	36	65 1/4			68											290.00
				LHD4048	48	77 1/4			80											300.00

Additional Notes

Please call 1-866-REXNORD for availability
Note: Dimensions subject to change. Certified dimensions of ordered material furnished on request.

B400L

Photo Shows an Unmounted Spherical Roller Bearing Unit

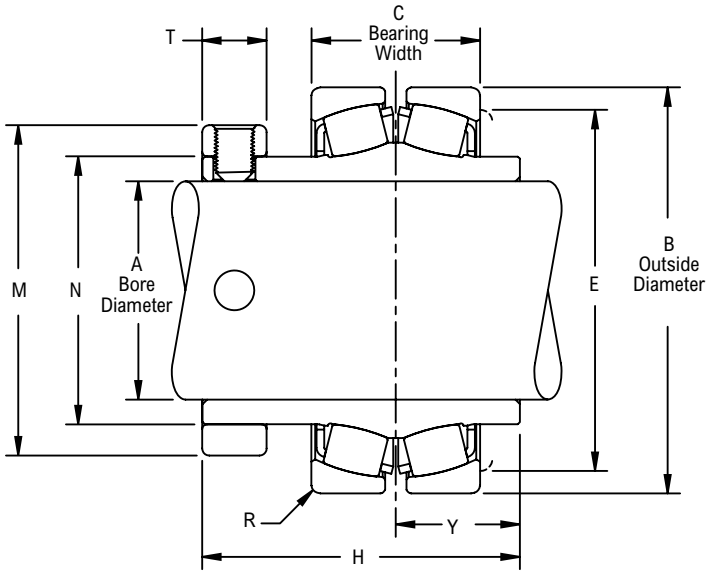

Product Features

Hardened spring locking collar
Self aligning
See Features and Benefits for additional info on pages 132 - 133.

Bearing Dimensions

Size Code	Shaft Diameter	Part Number	A Bore Diameter	B Outside Diameter	C Bearing Width	E	H	M	N	R	T	Y	Approx. Weight
B416	1	B416L	1.0000	2.3750	1.1880	2	2.56	1.75	1.307	0.046	1/2	1	1.30
	25.00	*B4M25L*	*25.0000*	*60.3250*	*30.1800*	*50.80*	*65.09*	*44.40*	*33.200*	*1.170*	*12.70*	*25.40*	*0.60*
B420	1 3/16	B419L	1.1875	2.6250	1.3120	2 5/16	2.69	1.97	1.532	0.062	1/2	1 1/16	1.80
	1 1/4	B420L	1.2500										
	30.00	*B4M30L*	*30.0000*	*66.6750*	*33.3200*	*58.70*	*68.26*	*50.00*	*38.910*	*1.570*	*12.70*	*26.99*	*0.80*
B424	1 7/16	B423L	1.4375	2.8345	1.3100	2 1/2	2.88	2.31	1.745	0.062	5/8	1 3/32	2.20
	1 1/2	B424L	1.5000										
	35.00	*B4M35L*	*35.0000*	*72.0000*	*33.2700*	*63.50*	*73.02*	*58.70*	*44.320*	*1.570*	*15.90*	*27.78*	*1.00*
B428	1 1/2	B4B24L	1.5000	3.3464	1.5780	2 7/8	3.13	2.59	2.027	0.062	5/8	1 7/32	3.20
	1 5/8	B426L	1.6250										
	1 11/16	B427L	1.6875										
	1 3/4	B428L	1.7500										
	40.00	*B4M40L*	*40.0000*	*85.0000*	*40.0800*	*73.00*	*79.38*	*65.90*	*51.480*	*1.570*	*15.90*	*30.96*	*1.40*
B432	1 3/4	B4B28L	1.7500	3.5433	1.5260	3 3/16	3.13	2.88	2.307	0.078	5/8	1 7/32	3.30
	1 15/16	B431L	1.9375										
	2	B432L	2.0000										
	45.00	*B4M45L*	*45.0000*	*90.0000*	*38.7600*	*81.00*	*79.38*	*73.00*	58.590	1.980	*15.90*	*30.96*	*1.50*
	50.00	*B4M50L*	*50.0000*										
B436	2 3/16	B435L	2.1875	3.9370	1.6560	3 1/2	3.31	3.25	2.620	0.062	3/4	1 1/4	4.60
	2 1/4	B436L	2.2500										
	55.00	*B4M55L*	*55.0000*	*100.0000*	*42.0600*	*88.90*	*84.14*	*82.60*	*66.550*	*1.570*	*19.00*	*31.75*	*2.10*
B440	2 1/4	B4B36L	2.2500	4.3307	1.7500	3 7/8	3.50	3.56	2.901	0.078	13/16	1 5/16	5.80
	2 7/16	B439L	2.4375										
	2 1/2	B440L	2.5000										
	60.00	*B4M60L*	*60.0000*	*110.0000*	*44.4500*	*98.40*	*88.90*	*90.50*	*73.690*	*1.980*	*20.60*	*33.34*	*2.60*
B448	2 11/16	B443L	2.6875	5.1172	2.1250	4 17/32	4.00	4.06	3.370	0.078	13/16	1 9/16	9.50
	2 3/4	B444L	2.7500										
	2 15/16	B447L	2.9375										
	3	B448L	3.0000										
	65.00	*B4M65L*	*65.0000*	*130.0000*	*53.9800*	*115.10*	*101.60*	*103.20*	*85.600*	*1.980*	*20.60*	*39.69*	*4.30*
	70.00	*B4M70L*	*70.0000*										
	75.00	*B4M75L*	*75.0000*										
B456	3 3/16	B451L	3.1875	5.9045	2.3130	5 11/32	4.38	4.91	3.975	0.125	27/32	1 23/32	13.50
	3 7/16	B455L	3.4375										

Continued...

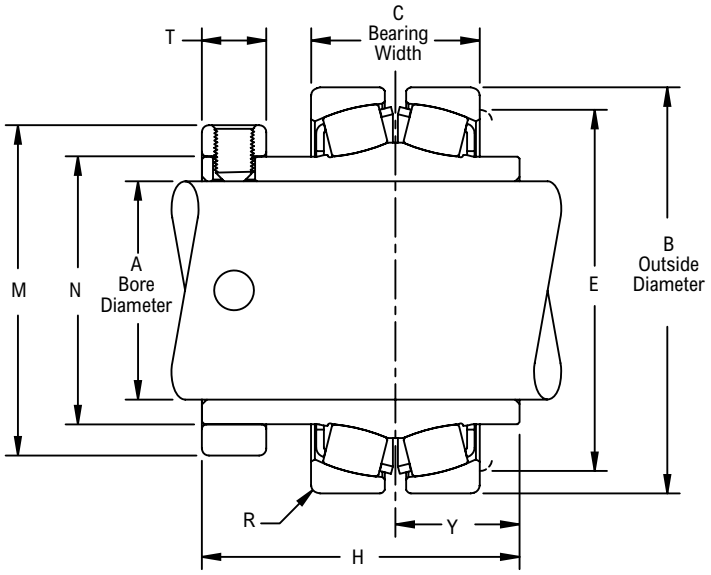

Continued...

Bearing Dimensions

Size Code	Shaft Diameter	Part Number	A Bore Diameter	B Outside Diameter	C Bearing Width	E	H	M	N	R	T	Y	Approx. Weight
B456	3 1/2	B456L	3.5000	5.9045	2.3130	5 11/32	4.38	4.91	3.975	0.125	27/32	1 23/32	13.50
	80.00	*B4M80L*	*80.0000*	*149.9740*	*58.7500*	*135.70*	*111.12*	*124.60*	*100.970*	*3.180*	*21.40*	*43.66*	*6.10*
	85.00	*B4M85L*	*85.0000*										
B464	3 11/16	B459L	3.6875	7.0856	2.7500	6 3/8	5.06	5.63	4.561	0.125	31/32	2	24.00
	3 15/16	B463L	3.9375										
	4	B464L	4.0000										
	90.00	*B4M90L*	*90.0000*	*179.9740*	*69.8500*	*161.90*	*128.59*	*142.90*	*115.850*	*3.180*	*24.60*	*50.80*	*10.80*
	100.00	*B4M100L*	*100.0000*										

Additional Notes

Please call 1-866-REXNORD for availability
Bearing O.D. tolerance, +.001 in/-.000 in *(+0.025 mm/-0.000 mm)*
Bore tolerance, +.0010 in/-.0000 in *(+0.025 mm/-0.000 mm)*
Bearing width tolerance, +/-.025 in *(+/-0.64 mm)*
Housing must allow clearance for this adjustment on dimension “C”

For the Selection Guide, Load Ratings and Speed Limits, see the Link-Belt Spherical Roller Bearings Engineering section on pages 135 - 140.

Note: Dimensions subject to change. Certified dimensions of ordered material furnished on request.

B500L

Photo Shows an Unmounted Spherical Roller Bearing Unit

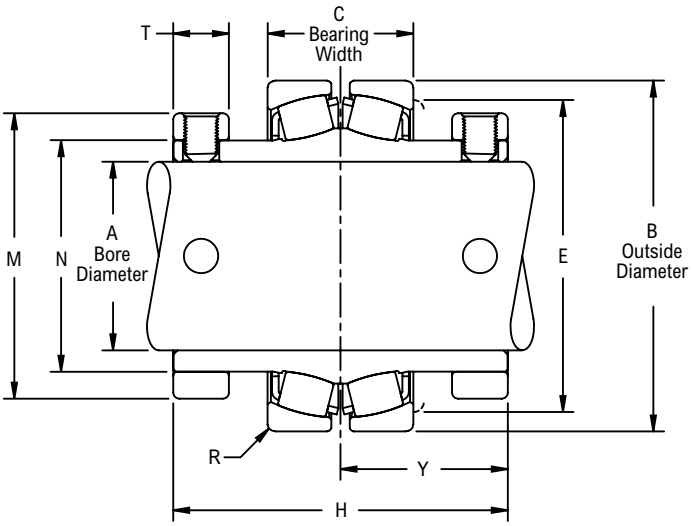

Product Features

Two hardened spring locking collars
Self aligning
See Features and Benefits for additional info on pages 132 - 133.

Bearing Dimensions

Size Code	Shaft Diameter	Part Number	A Bore Diameter	B Outside Diameter	C Bearing Width	E	H	M	N	R	T	Y	Approx. Weight
B524	1 7/16	B523L	1.4375	2.8345	1.3100	2 1/2	3.56	2.31	1.745	0.062	5/8	1 25/32	2.40
B528	1 11/16	B527L	1.6875	3.3464	1.5780	2 7/8	3.81	2.59	2.027	0.062	5/8	1 29/32	3.50
B531	1 15/16	B531L	1.9375	3.5433	1.5260	3 3/16	3.81	2.88	2.307	0.078	5/8	1 29/32	3.80
B536	2	B532L	2.0000	3.9370	1.6560	3 1/2	4.13	3.25	2.620	0.062	3/4	2 1/16	6.00
	2 3/16	B535L	2.1875										
B540	2 7/16	B539L	2.4375	4.3307	1.7500	3 7/8	4.38	3.56	2.901	0.078	13/16	2 3/16	7.20
B548	2 11/16	B543L	2.6875	5.1172	2.1250	4 17/32	4.88	4.06	3.370	0.078	13/16	2 7/16	11.10
	2 15/16	B547L	2.9375										
B556	3 7/16	B555L	3.4375	5.9045	2.3130	5 11/32	5.31	4.91	3.975	0.125	27/32	2 21/32	15.70
B564	3 15/16	B563L	3.9375	7.0856	2.7500	6 3/8	6.13	5.63	4.561	0.125	31/32	3 1/16	26.70
	4	B564L	4.0000										
B572	4 3/16	B567YL	4.1875	7.6815	2.679	6.875	6.25	6.19	5.032	0.145	1	3 1/8	37.00
	4 7/16	B571YL	4.4375										
	4 1/2	B572YL	4.5000										
	110.00	*B5M110YL*	*110.0000*	*195.1101*	*68.0491*	*175*	*158.75*	*157.23*	*127.813*	*3.683*	*25.40*	*79.38*	*16.70*
	115.00	*B5M115YL*	*115.0000*										
B580	4 15/16	B579YL	4.9375	9.0574	3.5562	8.125	7.88	7.04	5.750	0.145	1 1/16	3 15/16	41.20
	5	B580YL	5.0000										
	125.00	*B5M125YL*	*125.0000*	*230.0580*	*90.3275*	*206.375*	*200.15*	*178.94*	*146.050*	*3.683*	*26.80*	*100.01*	*18.50*

Additional Notes

Please call 1-866-REXNORD for availability
Bearing O.D. tolerance, +.001 in/-.000 in *(+0.025 mm/-0.000 mm)*
Bore tolerance, +.0010 in/-.0000 in *(+0.025 mm/-0.000 mm)*
Bearing width tolerance, +/-.025 in *(+/-0.64 mm)*
Housing must allow clearance for this adjustment on dimension "C"

For the Selection Guide, Load Ratings and Speed Limits, see the Link-Belt Spherical Roller Bearings Engineering section on pages 135 - 140.

Note: Dimensions subject to change. Certified dimensions of ordered material furnished on request.

B600L

Photo Shows an Unmounted Spherical Roller Bearing Unit

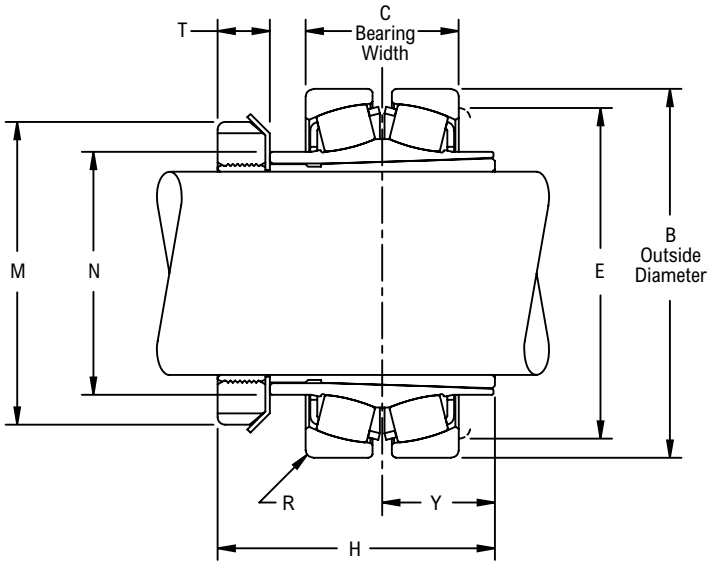

Product Features

Enhanced life mounting style
Self aligning
See Features and Benefits for additional info on pages 132 - 133.

Bearing Dimensions

Size Code	Shaft Diameter	Part Number	B Outside Diameter	C Bearing Width	E	H	M	N	R	T	Y	Approx. Weight
B624	1 7/16	B623L	2.8345	1.3100	2 1/2	2.71	2 1/4	1.745	0.062	1/2	1 3/32	2.10
B631	1 15/16	B631L	3.5433	1.5260	3 3/16	3.08	2 31/32	2.307	0.078	9/16	1 7/32	3.30
B635	2 3/16	B635L	3.9370	1.6560	3 1/2	3.16	3 5/32	2.620	0.062	19/32	1 1/4	4.50
B639	2 7/16	B639L	4.3307	1.7500	3 7/8	3.36	3 5/8	2.901	0.078	5/8	1 5/16	5.90
B647	2 11/16	B643L	5.1172	2.1250	4 17/32	3.86	4 5/32	3.370	0.078	43/64	1 9/16	9.50
	2 15/16	B647L										
B655	3 7/16	B655L	5.9045	2.3130	5 11/32	4.31	4 15/16	3.975	0.125	51/64	1 23/32	12.80
B663	3 15/16	B663L	7.0856	2.7500	6 3/8	4.94	5 7/16	4.561	0.125	55/64	2	23.20

Additional Notes

Please call 1-866-REXNORD for availability
Dimension for "H" based on unmounted condition
Bearing O.D. tolerance, +.001 in/-.000 in *(+0.025 mm/-0.000 mm)*
Bore tolerance, +.0010 in/-.0000 in *(+0.025 mm/-0.000 mm)*
Bearing width tolerance, +/-.025 in *(+/-0.64 mm)*
Housing must allow clearance for this adjustment on dimension "C"

For the Selection Guide, Load Ratings and Speed Limits, see the Link-Belt Spherical Roller Bearings Engineering section on pages 135 - 140.

Note: Dimensions subject to change. Certified dimensions of ordered material furnished on request.

Threaded Cover Kit

Set Collar Kit

Microlock Assembly Kit

Adapter Sleeve Kit

H Seal

E Seal

E7 Seal

Bearing Dimensions

Size Code	H	E	E7	Threaded Cover Kit	Set Collar Kit	Microlock Assembly Kit	Adapter Assembly Kit
B416	B417HS	B417ES	-	B417TC	B417SC	B436MLK*	-
B420	B420HS	B420ES	B420E7S	B420TC	B420SC	B436MLK*	-
B424 B524 B624	B424HS	B424ES	B424E7S	B424TC	B424SC	B436MLK*	SNW623
B428 B528	B428HS	B428ES	B428E7S	B428TC	B428SC	B436MLK*	-
B432 B531 B631	B432HS	B432ES	B432E7S	B432TC	B432SC	B436MLK*	SNW631
B436 B536 B635	B436HS	B436ES	B436E7S	B436TC	B436SC	B436MLK*	SNW635
B440 B540 B639	B440HS	B440ES	B440E7S	B440TC	B440SC	B448MLK►	SNW639
B448 B548 B647	B448HS	B448ES	B448E7S	B448TC	B448SC	B448MLK►	SNW647
B456 B556 B655	B456HS	B456ES	B456E7S	B456TC	B456SC	B580MLK◊	SNW655
B464 B564 B663	B464HS	B464ES	B464E7S	B464TC	B464SC	B580MLK◊	SNW663
B572	B572YHS	B572YES	B572YE7S	B572YTC	B572Y5S	B580YMLK◊	-
B580	B580YHS	B580YES	B580YE7S	B580YTC	B580Y5S	B580YMLK◊	-

Additional Notes

* CB cartridge blocks in these size codes require B436MLK1 Microlock Kit
► CB cartridge blocks in these size codes require B456MLK Microlock Kit
◊ CB cartridge blocks in these size codes require B572MLK Microlock Kit

Spherical Roller Bearings Units: Rexnord PT Select Series

Contents

	Page
Features and Benefits	192
Nomenclature	193
Engineering	194
Dimensions	
Pillow Blocks	198
Flange Blocks	201

Industries Served

Aggregates
Air & Fluid Handling
Cement
Construction
Material Handling
Package Handling

Rexnord PT Select Series Spherical Roller Bearings

1. **Rugged cast iron housing**
2. **Total misalignment capability up to 2 degrees**
3. **Expansion and non-expansion units available**
4. **90-degree mounting collar for superior holding strength**

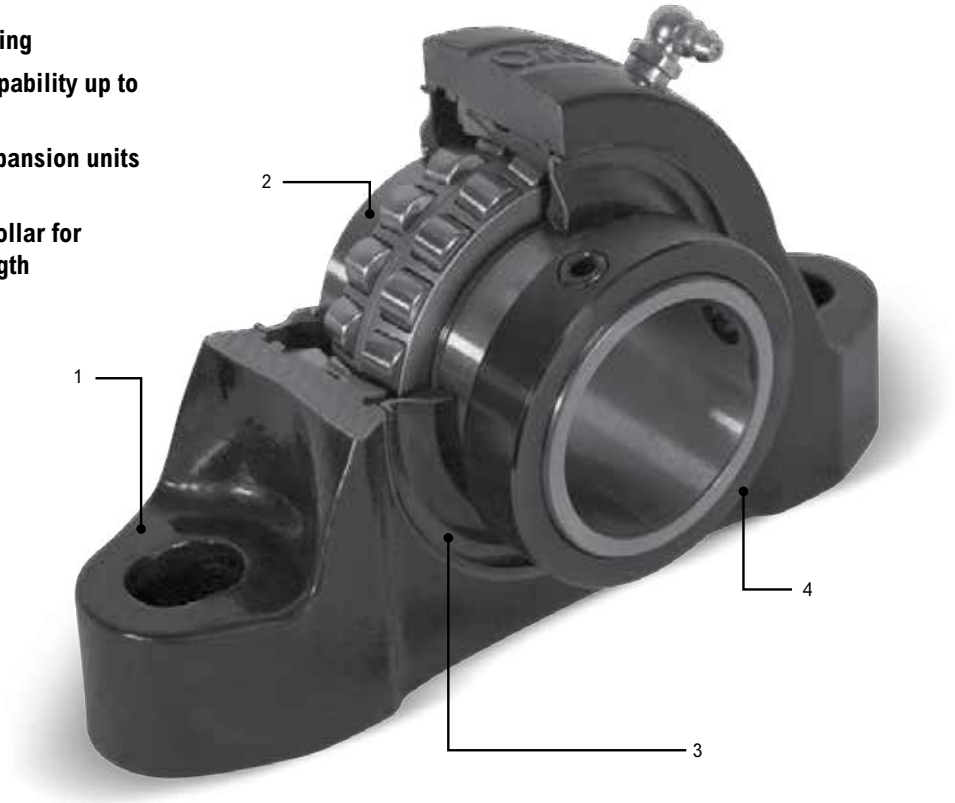

Additional Features and Benefits

- State-of-the-art design allows increased strength while optimizing material
- Industry-standard dimensions for interchangeability with leading brands
- Standard, off-the-shelf sizes for quick turnarounds needs
- Field installable/removable safety caps that are compatible with standard housings
- Rugged metal retainer for increased strength and durability
- Shaft ready and pre-lubricated with our standard grease for normal operation

Seal Types

Type T Triple Lip Seal

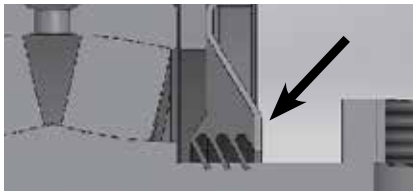

Three points of contact (shown above) provide superior ingress protection against contaminants.

Engineered bearing seals for increased product life

Designed for efficiency while maintaining the overall product strength, the bearing delivers the seal performance your environment requires.

- Standard triple lip and clearance seal provides maximum ingress protection against contaminants which are a leading cause of bearing failure (optional labyrinth seal available)
- Clearance seal reduces operating temperatures at higher speeds
- Features nitrile material with protective metal shield

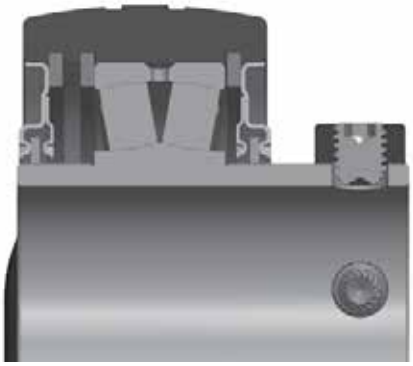

Type C Clearance Seal

Also Available with These Housings

2-bolt Pillow Block

4-bolt Pillow Block

2-bolt Pillow Block — Type E

Flange Block

Flange Block — Type E

Piloted Flange

Nomenclature

P2B - 107 - C E

Symbol	Description
EFB	Type E Flanged Unit; 4-bolt square
EP2B	Type E 2-Bolt Pillow Block
FB	Flanged Unit; 4-bolt square
FC	Flanged Cartridge Unit; 4-bolt round
P2B	2-Bolt Pillow Block
P4B	4-Bolt Pillow Block
107	1-7/16"
111	1-11/16"
115	1-15/16"
203	2-3/16"
207	2-7/16"
208	2-1/2"
211	2-11/16"
215	2-15/16"
307	3-7/16"
308	3-1/2"
315	3-15/16"
407	4-7/16"
T	Triple Lip Seal
C	Clearance Seal
Blank	Fixed
E	Expansion

Cap Kit Part Numbers

Size Code	Shaft Size	Open Cap	Closed Cap
4	1-7/16"	B1076D	B1086
5	1-11/16"	B1116D	B1126
6	1-15/16"	B1156D	B2006
7	2-3/16"	B2036D	B2046
8	2-7/16"	B2076D	B2086
8	2-1/2"	B2086D	
9	2-11/16"	B2116D	B3006
9	2-15/16"	B2156D	
10	3-7/16"	B3076D	B3086
10	3-1/2"	B3086D	
11	3-15/16"	B3156D	B4006
12	4-7/16"	B4076D	B4086

Caps sold separately and can be added to any housing style

Rexnord PT Select Series Spherical Roller Bearing Selection Guide

To select a bearing, determine the applied radial load, the applied thrust load, the desired Rating Life, and applicable operating conditions. The procedure shown here will aid in selecting a bearing to meet an L_{10} design life. The formulas for calculating life expectancy should be used to determine the Rating Life L_{10} for the bearing selected.

The selection procedures and rating formulas shown here are in agreement with the American Bearing Manufacturers Association (ABMA) standards and ANSI/ABMA Standards STD 11-1990. Ratings are based on fatigue life. The Rating Life L_{10} or fatigue life at 90% reliability is the usual basis for bearing selection. For radial load applications only, Table 3, can be used to select a bearing or to determine L_{10} life expectancy.

To assure a satisfactory bearing application, fitting practice, mounting, lubrication, sealing, static rating, housing strength, operating conditions and maintenance must be considered.

Steps for Selection

Step 1

Determine an appropriate L_{10} design life.

Type of service	Operating time, hours per year	Design life, years	L_{10} design life, hours
Light seasonal usage	500 to 750	3-5	3,000
Heavy seasonal usage	1,400 to 1,600	4-6	8,000
Industrial—8 hour shift	2,000	10	20,000
Industrial—16 hour shift	4,000	10	40,000
Industrial—continuous	8,700	10	80,000 to 100,000

Step 2

Determine a required $\left(\frac{C}{P}\right)$ from Table 1.

Step 3

Calculate the required C and select a roller bearing.

a For radial load only:

$P = F_r$

required $C = \left(\frac{C}{P}\right) P$ using $\left(\frac{C}{P}\right)$ from Step 2

Select a roller bearing from Table 2 with a basic load rating C equal to or greater than the required C.

Step 3 (continued)

b For combined radial and thrust loads:

Select a trial roller bearing of the desired shaft size from Table 2.

Calculate the ratio of thrust load F_a to the radial load F_r.

$$\frac{F_a}{F_r}$$

Calculate the equivalent radial load P

$$P = XF_r + YF_a$$

If $\frac{F_a}{F_r}$ is equal to or less than e, then $P = X_1F_r + Y_1F_a$

If $\frac{F_a}{F_r}$ is greater than e, then $P = X_2F_r + Y_2F_a$

For values of e, X_1, Y_1, X_2, and Y_2, see Table 2.

Calculate the required C

required $C = \left(\frac{C}{P}\right) P$ using $\left(\frac{C}{P}\right)$ from Step 2.

Consult Table 2, basic load rating. If a smaller bearing meets, or nearly meets, the required C, its life expectancy can be calculated.

Note: If the load P is greater than .25C, consult Rexnord Bearing Division.

Selection

Symbols for formulas:

C = basic load rating, pounds (or newtons)
Co = static load rating, pounds (or newtons)
e = a reference value
F_a = thrust load, pounds (or newtons)
F_r = radial load, pounds (or newtons)
L_{10} = rating life, hours
n = speed, revolutions per minute
P = equivalent radial load, pounds (or newtons)
X = radial factor
Y = thrust factor

Table 1 • Relation of L_{10} life and speed to $\left(\frac{C}{P}\right)$

Bearing Life Hours L_{10}	Speed, n								
	50	100	200	300	400	500	600	700	800
3000	1.93	2.38	2.93	3.31	3.61	3.86	4.07	4.27	4.44
4000	2.11	2.59	3.19	3.61	3.93	4.20	4.44	4.65	4.84
5000	2.25	2.77	3.42	3.86	4.20	4.50	4.75	4.97	5.18
6000	2.38	2.93	3.61	4.07	4.44	4.75	5.02	5.25	5.47
8000	2.59	3.19	3.93	4.44	4.84	5.18	5.47	5.73	5.96
10000	2.77	3.42	4.20	4.75	5.18	5.54	5.85	6.12	6.37
12000	2.93	3.61	4.44	5.02	5.47	5.85	6.18	6.47	6.73
14000	3.07	3.78	4.65	5.25	5.73	6.12	6.47	6.77	7.05
16000	3.19	3.93	4.84	5.47	5.96	6.37	6.73	7.05	7.34
18000	3.31	4.07	5.02	5.66	6.18	6.60	6.97	7.30	7.60
20000	3.42	4.20	5.18	5.85	6.37	6.81	7.20	7.54	7.85
25000	3.65	4.50	5.54	6.25	6.81	7.29	7.70	8.06	8.39
30000	3.86	4.75	5.85	6.60	7.20	7.70	8.13	8.51	8.86
35000	4.04	4.97	6.12	6.92	7.54	8.06	8.51	8.92	9.28
40000	4.20	5.18	6.37	7.20	7.85	8.39	8.86	9.28	9.66
45000	4.36	5.36	6.60	7.46	8.13	8.69	9.18	9.61	10.00
50000	4.50	5.54	6.81	7.70	8.39	8.97	9.48	9.92	10.30
60000	4.75	5.85	7.20	8.13	8.86	9.48	10.00	10.50	10.90
70000	4.97	6.12	7.54	8.51	9.28	9.92	10.50	11.00	11.40
80000	5.18	6.37	7.85	8.86	9.66	10.30	10.90	11.40	11.90
90000	5.36	6.60	8.13	9.18	10.00	10.70	11.30	11.80	12.30
100000	5.54	6.81	8.39	9.48	10.30	11.00	11.70	12.20	12.70
150000	6.25	7.70	9.48	10.70	11.70	12.50	13.20	13.80	14.40
200000	6.81	8.39	10.30	11.70	12.70	13.60	14.40	15.00	15.70
	Speed, n								
	900	1000	1200	1500	1800	2400	3000	3600	6000
3000	4.60	4.75	5.02	5.36	5.66	6.18	6.60	6.97	8.13
4000	5.02	5.18	5.47	5.85	6.18	6.73	7.20	7.60	8.86
5000	5.36	5.54	5.85	6.25	6.60	7.20	7.70	8.13	9.48
6000	5.66	5.85	6.18	6.60	6.97	7.60	8.13	8.59	10.00
8000	6.18	6.37	6.73	7.20	7.60	8.29	8.86	9.36	10.90
10000	6.60	6.81	7.20	7.70	8.13	8.86	9.48	10.00	11.70
12000	6.97	7.20	7.60	8.13	8.59	9.36	10.00	10.60	12.30
14000	7.30	7.54	7.96	8.51	8.99	9.80	10.50	11.10	12.90
16000	7.60	7.85	8.29	8.86	9.36	10.20	10.90	11.50	13.40
18000	7.88	8.13	8.59	9.18	9.70	10.60	11.30	11.90	13.90
20000	8.13	8.39	8.86	9.48	10.00	10.90	11.70	12.30	14.40
25000	8.69	8.97	9.48	10.10	10.70	11.70	12.50	13.20	15.40
30000	9.18	9.48	10.00	10.70	11.30	12.30	13.20	13.90	16.20
35000	9.61	9.92	10.50	11.20	11.80	12.90	13.80	14.60	17.00
40000	10.00	10.30	10.90	11.70	12.30	13.40	14.40	15.20	17.70
45000	10.40	10.70	11.30	12.10	12.80	13.90	14.90	15.70	18.30
50000	10.70	11.00	11.70	12.50	13.20	14.40	15.40	16.20	18.90
60000	11.30	11.70	12.30	13.20	13.90	15.20	16.20	17.10	20.00
70000	11.80	12.20	12.90	13.80	14.60	15.90	17.00	17.90	20.90
80000	12.30	12.70	13.40	14.40	15.20	16.50	17.70	18.70	21.80
90000	12.80	13.20	13.90	14.90	15.70	17.10	18.30	19.40	22.60
100000	13.20	13.60	14.40	15.40	16.20	17.70	18.90	20.00	23.30
150000	14.90	15.40	16.20	17.30	18.30	20.00	21.40	22.60	26.30
200000	16.20	16.70	17.70	18.90	20.00	21.80	23.30	24.60	28.70

Basic Formula

$$\left(\frac{C}{P}\right) = \left(\frac{L_{10} \times n \times 60}{1{,}000{,}000}\right)^{3/10}$$

$$L_{10} = \frac{\left(\frac{C}{P}\right)^{10/3} \times 1{,}000{,}000}{n \times 60}$$

Life Expectancy

To calculate the Rating Life L_{10} of any selected or trial bearing:

Step 1

Determine the equivalent radial load P.

a For radial load only:

$$P = F_r$$

b For combined radial and thrust load:

$$P = XF_r + YF_a$$

if $\frac{F_a}{F_r}$ is equal to or less than e, then

$$P = X1F_r + Y1F_a$$

if $\frac{F_a}{F_r}$ is greater than e, then

$$P = X_2F_r + Y_2F_a$$

For values of e, X1, Y1, X2, and Y2, consult the appropriate bearing rating Table 2.

Step 2

Calculate the ratio of the basic load rating C to the equivalent radial load.

$$\left(\frac{C}{P}\right)$$

Step 3

Approximate the bearing life from Table 1.

Life Adjustment

The Rating Life, L_{10}, may be modified for some applications in accordance with the formula

$$L_n = a_1a_2a_3L_{10}$$

where L_n = Adjusted life for (100-n) % reliability,
a_1 = Life adjustment factor for reliability
a_2 = Life adjustment factor for material and processing
a_3= Life adjustment factor for operating conditions.

For most normal applications, all factors will be taken as 1, and the Rating Life used as the selection basis or life estimate. In addition, as long as standard catalog bearings are used, a_2 will be normally set equal to one.

The factor a_3 covers such things as lubrication, misalignment, and temperature. Some conditions that could yield a_3 significantly different than unity include speeds less than 20000 DN or greater than 200000 DN, temperatures below –40°F *(–40°C)* or above 275°F *(135°C)*. For other possible conditions, as well as additional information on life adjustment factors, consult Rexnord Bearing Division.

Table 2 • Load Ratings and Speed Limits

Size Code	C Dynamic Load Rating		Co Static Load Rating		Approximate speed limit RPM*		e	Fa/Fr ≤ e		Fa/Fr > e	
	pounds	newtons	pounds	newtons	Clearance Seal	Triple Lip Seal		X_1	Y_1	X_2	Y_2
4	20,000	88,964	21,360	95,014	4,040	3,490	0.27	1.00	2.49	0.67	3.71
5	20,500	91,189	23,240	103,377	3,820	3,300	0.27	1.00	2.51	0.67	3.74
6	21,000	93,413	24,710	109,916	3,540	3,060	0.25	1.00	2.69	0.67	4.00
7	26,200	116,543	30,590	136,071	3,150	2,720	0.22	1.00	3.05	0.67	4.54
8	38,400	170,812	43,870	195,143	2,670	2,310	0.26	1.00	2.62	0.67	3.90
9	41,000	182,377	48,420	215,383	2,420	2,090	0.23	1.00	2.89	0.67	4.30
10	64,000	284,686	77,880	346,428	1,980	1,710	0.24	1.00	2.76	0.67	4.11
11	80,000	355,858	98,600	438,595	1,760	1,520	0.25	1.00	2.72	0.67	4.05
12	99,200	441,264	129,440	575,778	1,600	1,380	0.26	1.00	2.61	0.67	3.88

If the load P is greater than 25% of C, consult Rexnord Bearing Division.

For setscrew mounted bearings, reduce C Dynamic Load rating by 15%.

For vertical shaft application, consult Rexnord Bearing Division.

*Based on grease lubrication and moderate load.

Table 3 • Radial Load Ratings in Pounds at Various RPM for Appropriate L_{10} Life Hours

Size Code		50	100	200	300	400	500	600	700	800	900	1000	1200	1500	1800	2000	2500	3000	3500
4	8000	*	*	*	4503	4131	3863	3658	3492	3355	3239	3138	2971	2779	2631	2549	2384	2257	2155
	20000	*	4756	3863	3421	3138	2935	2779	2653	2549	2460	2384	2257	2111	1998	1936	1811	1715	1637
	40000	4756	3863	3138	2779	2549	2384	2257	2155	2070	1998	1936	1833	1715	1623	1573	1471	1393	1330
	100000	3613	2935	2384	2111	1936	1811	1715	1637	1573	1518	1471	1393	1302	1233	1195	1117	1058	1010
5	8000	*	*	*	4616	4234	3960	3749	3580	3439	3320	3216	3045	2848	2696	2613	2443	2313	
	20000	*	4875	3960	3506	3216	3008	2848	2719	2613	2522	2443	2313	2164	2048	1985	1856	1757	
	40000	4875	3960	3216	2848	2613	2443	2313	2209	2122	2048	1985	1879	1757	1664	1612	1508	1427	
	100000	3704	3008	2443	2164	1985	1856	1757	1678	1612	1556	1508	1427	1335	1264	1225	1145	1084	
6	8000	*	*	*	4728	4337	4057	3841	3667	3523	3401	3295	3120	2918	2762	2676	2503	2370	
	20000	*	4994	4057	3592	3295	3082	2918	2786	2676	2583	2503	2370	2216	2098	2033	1901	1800	
	40000	4994	4057	3295	2918	2676	2503	2370	2263	2174	2098	2033	1925	1800	1704	1651	1544	1462	
	100000	3794	3082	2503	2216	2033	1901	1800	1719	1651	1594	1544	1462	1368	1295	1254	1173	1111	
7	8000	*	*	*	5899	5411	5061	4792	4575	4395	4243	4111	3892	3640	3446	3339	3123		
	20000	*	6231	5061	4481	4111	3845	3640	3476	3339	3223	3123	2957	2765	2618	2537	2372		
	40000	6231	5061	4111	3640	3339	3123	2957	2823	2712	2618	2537	2402	2246	2126	2060	1927		
	100000	4733	3845	3123	2765	2537	2372	2246	2145	2060	1989	1927	1824	1706	1615	1565	1464		
8	8000	*	*	*	8646	7931	7418	7023	6705	6442	6219	6025	5704	5335	5051	4894			
	20000	*	9132	7418	6568	6025	5635	5335	5094	4894	4724	4577	4333	4053	3837	3718			
	40000	9132	7418	6025	5335	4894	4577	4333	4138	3975	3837	3718	3520	3292	3117	3020			
	100000	6937	5635	4577	4053	3718	3477	3292	3143	3020	2915	2824	2674	2501	2368	2294			
9	8000	*	*	*	9232	8468	7920	7498	7159	6878	6640	6433	6091	5696	5393	5225			
	20000	*	9751	7920	7013	6433	6016	5696	5439	5225	5044	4887	4627	4327	4097	3969			
	40000	9751	7920	6433	5696	5225	4887	4627	4418	4244	4097	3969	3758	3515	3328	3224			
	100000	7407	6016	4887	4327	3969	3712	3515	3356	3224	3112	3015	2855	2670	2528	2449			
10	8000	*	*	*	14410	13219	12363	11705	11176	10737	10364	10042	9507	8892					
	20000	*	15220	12363	10947	10042	9391	8892	8490	8156	7873	7628	7222	6755					
	40000	15220	12363	10042	8892	8156	7628	7222	6896	6625	6395	6196	5866	5486					
	100000	11562	9391	7628	6755	6196	5795	5486	5238	5033	4858	4707	4456	4168					
11	8000	*	*	*	18013	16523	15453	14631	13970	13421	12955	12552	11884						
	20000	*	19025	15453	13684	12552	11739	11115	10612	10196	9842	9535	9028						
	40000	19025	15453	12552	11115	10196	9535	9028	8620	8281	7994	7745	7333						
	100000	14453	11739	9535	8443	7745	7244	6858	6548	6291	6073	5884	5570						
12	8000	*	*	*	22336	20489	19162	18142	17322	16642	16064	15565	14736						
	20000	*	23592	19162	16968	15565	14557	13782	13159	12642	12204	11824	11194						
	40000	23592	19162	15565	13782	12642	11824	11194	10689	10269	9912	9604	9093						
	100000	17922	14557	11824	10470	9604	8982	8504	8120	7801	7530	7296	6907						

If the load P is greater than 25% of the C, consult Rexnord Bearing Division.

For setscrew mounted bearings, reduce C Dynamic Load rating by 15%.

For vertical shaft application, consult Rexnord Bearing Division.

*Based on grease lubrication and moderate load.

P2B

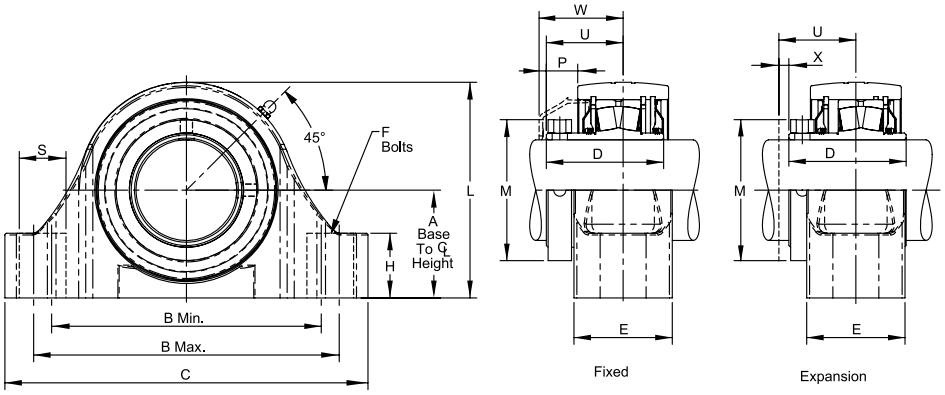

Product Features

Corrosion-resistant powder coating
Cast iron housing
Misalignment capabilities - total of 2°
Triple lip seal standard; optional clearance seal
Factory lubricated
90° grease fitting standard; straight fitting provided in box

Bearing Dimensions

Size Code	Shaft Diameter	Fixed Part Number	Expansion Part Number	A Base to Centerline Height	B Distance Between Bolt Holes Min	B Distance Between Bolt Holes Max	C	D	E	F Bolts	H	L	M	P	S	U	W	X	Approx. Weight
4	1-7/16	P2B-107-T	P2B-107-TE	1.88	4.81	5.20	6.62	2.71	1.95	1/2	1.13	3.85	2.30	0.98	0.82	1.83	2.10	0.22	5.00
5	1-11/16	P2B-111-T	P2B-111-TE	2.13	5.31	5.70	7.12	2.76	2.06	1/2	1.25	4.27	2.58	0.91	0.82	1.84	2.11	0.23	6.20
6	1-15/16	P2B-115-T	P2B-115-TE	2.25	6.06	6.44	7.99	2.84	2.13	5/8	1.31	4.49	2.88	1.07	0.94	1.95	2.22	0.26	7.18
7	2-3/16	P2B-203-T	P2B-203-TE	2.50	6.56	6.94	8.49	2.99	2.63	5/8	1.50	5.00	3.25	0.95	0.94	2.06	2.33	0.26	10.11
8	2-7/16	P2B-207-T	P2B-207-TE	2.75	6.94	7.31	8.86	3.55	2.81	5/8	1.63	5.59	3.55	1.23	0.94	2.42	2.69	0.34	13.94
	2-1/2	P2B-208-T	P2B-208-TE																
9	2-11/16	P2B-211-T	P2B-211-TE	3.25	7.94	8.31	10.29	3.65	3.08	3/4	1.88	6.32	4.04	1.09	1.06	2.48	2.75	0.35	18.70
	2-15/16	P2B-215-T	P2B-215-TE																
10	3-7/16	P2B-307-T	P2B-307-TE	3.75	9.38	10.63	12.63	4.12	3.42	7/8	2.25	7.50	4.90	1.13	1.63	2.71	2.98	0.34	29.03
	3-1/2	P2B-308-T	P2B-308-TE																
11	3-15/16	P2B-315-T	P2B-315-TE	4.25	10.62	12.88	15.11	4.64	3.94	1	2.44	8.38	5.63	1.46	2.26	3.05	3.35	0.34	44.29

Additional Notes

Please call 1-866-REXNORD for availability
Lubrication fitting tap size, 1/8" PT
Bore size = nominal shaft size +.001 in/-.000 in *(+0.03 mm/-0.00 mm)*
Base to centerline tolerance, +/-.005"
Open and Closed End Caps available on all shaft sizes
For Selection Guide, Load Ratings and Speed Limits see Rexnord PT Select Series Engineering section on pages 194 - 197.
Note: Dimensions subject to change. Certified dimensions of ordered material furnished on request.

P4B

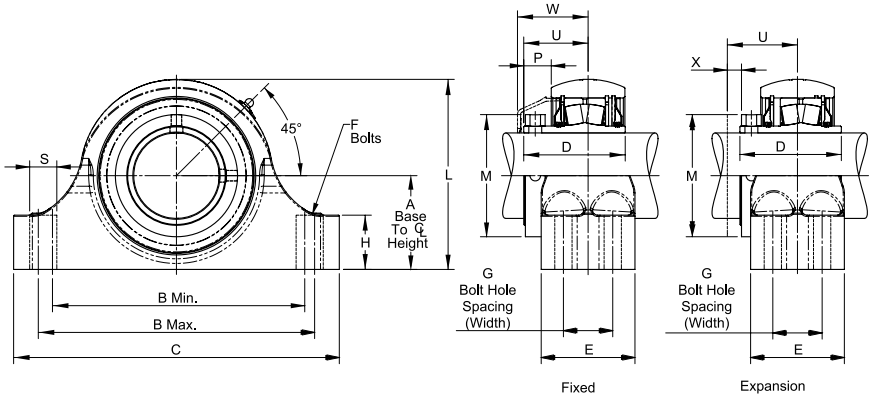

Product Features

Corrosion-resistant powder coating
Cast iron housing
Misalignment capabilities - total of 2°
Triple lip seal standard; optional clearance seal
Factory lubricated
90° grease fitting standard; straight fitting provided in box

Bearing Dimensions

Size Code	Shaft Diameter	Fixed Part Number	Expansion Part Number	A Base to Centerline Height	B Distance Between Bolt Holes Min	B Distance Between Bolt Holes Max	C	D	E	F Bolts	G Bolt Hole Spacing (Width)	H	L	M	P	S	U	W	X	Approx. Weight
6	1-15/16	P4B-115-T	P4B-115-TE	2.25	6.06	6.44	7.70	2.84	3.00	1/2	1.59	1.31	4.50	2.88	1.05	0.81	1.95	2.22	0.26	8.61
7	2-3/16	P4B-203-T	P4B-203-TE	2.50	6.56	6.94	8.36	2.99	3.25	1/2	1.69	1.50	5.00	3.25	0.95	0.81	2.06	2.33	0.26	12.24
8	2-7/16	P4B-207-T	P4B-207-TE	2.75	6.94	7.31	8.74	3.55	3.38	1/2	1.75	1.63	5.59	3.55	1.12	0.81	2.42	2.69	0.34	15.25
	2-1/2	P4B-208-T	P4B-208-TE																	
9	2-11/16	P4B-211-T	P4B-211-TE	3.25	7.94	8.31	9.86	3.65	3.75	5/8	1.88	1.88	6.44	4.04	1.09	0.94	2.48	2.75	0.35	21.83
	2-15/16	P4B-215-T	P4B-215-TE																	
10	3-7/16	P4B-307-T	P4B-307-TE	3.75	9.38	10.62	12.40	4.12	4.50	3/4	2.00	2.25	7.56	4.90	1.13	1.50	2.71	2.98	0.34	35.70
	3-1/2	P4B-308-T	P4B-308-TE																	
11	3-15/16	P4B-315-T	P4B-315-TE	4.25	12.13	12.87	14.75	4.64	4.50	3/4	2.25	2.44	8.44	5.63	1.08	1.25	3.05	3.35	0.34	50.41
12	4-7/16	P4B-407-T	P4B-407-TE	4.75	13.00	14.00	16.50	5.14	4.75	3/4	2.50	2.75	9.63	6.19	1.39	1.38	3.26	3.56	0.34	67.83

Additional Notes

Please call 1-866-REXNORD for availability

Lubrication fitting tap size, 1/8" PT

Bore size = nominal shaft size +.001 in/-.000 in *(+0.03 mm/-0.00 mm)*

Base to centerline tolerance, +/-.005"

Open and Closed End Caps available on all shaft sizes

For Selection Guide, Load Ratings and Speed Limits see Rexnord PT Select Series Engineering section on pages 194 - 197.

Note: Dimensions subject to change. Certified dimensions of ordered material furnished on request.

EP2B

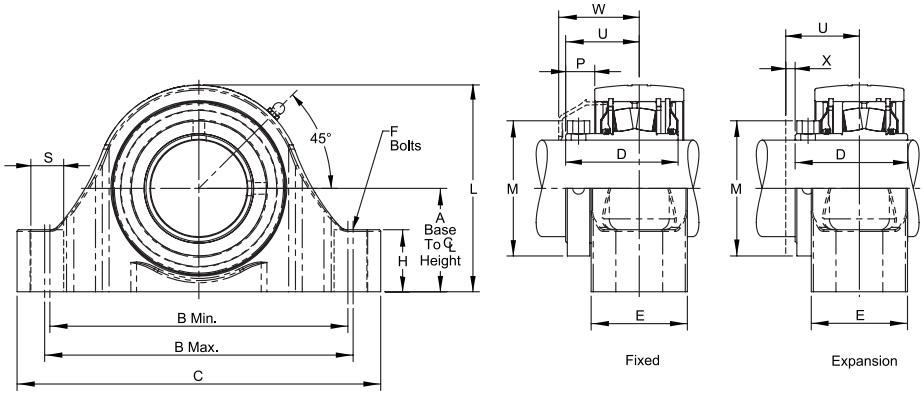

Product Features

Type E Interchange
Corrosion-resistant powder coating
Cast iron housing
Misalignment capabilities - total of 2°
Triple lip seal standard; optional clearance seal
Factory lubricated
90° grease fitting standard; straight fitting provided in box

Bearing Dimensions

Size Code	Shaft Diameter	Fixed Part Number	Expansion Part Number	A Base to Centerline Height	B Distance Between Bolt Holes Min	B Distance Between Bolt Holes Max	C	D	E	F Bolts	H	L	M	P	S	U	W	X	Approx. Weight
4	1-7/16	EP2B-107-T	EP2B-107-TE	1.88	5.63	5.88	7.30	2.71	1.95	1/2	1.13	3.85	2.30	0.99	0.75	1.83	2.10	0.22	4.99
5	1-11/16	EP2B-111-T	EP2B-111-TE	2.13	6.13	6.38	7.80	2.76	2.06	1/2	1.25	4.25	2.58	0.91	0.75	1.84	2.11	0.23	6.37
6	1-15/16	EP2B-115-T	EP2B-115-TE	2.25	6.88	7.12	8.67	2.84	2.13	5/8	1.31	4.50	2.88	1.07	0.87	1.95	2.22	0.26	7.25
7	2-3/16	EP2B-203-T	EP2B-203-TE	2.50	7.64	7.88	9.61	2.99	2.56	5/8	1.50	4.99	3.25	0.99	0.88	2.06	2.33	0.26	10.29
8	2-7/16	EP2B-207-T	EP2B-207-TE	2.75	8.38	8.62	10.17	3.55	2.87	5/8	1.63	5.69	3.55	1.30	0.87	2.42	2.70	0.34	14.12
	2-1/2	EP2B-208-T	EP2B-208-TE																
9	2-11/16	EP2B-211-T	EP2B-211-TE	3.13	9.31	9.69	11.67	3.65	2.69	3/4	1.88	6.26	4.04	1.13	1.07	2.48	2.75	0.35	20.40
	2-15/16	EP2B-215-T	EP2B-215-TE																
10	3-7/16	EP2B-307-T	EP2B-307-TE	3.75	10.81	11.19	13.19	4.12	3.49	7/8	2.25	7.50	4.90	1.10	1.19	2.71	2.92	0.34	29.64
	3-1/2	EP2B-308-T	EP2B-308-TE																

Additional Notes

Please call 1-866-REXNORD for availability

Lubrication fitting tap size, 1/8" PT

Bore size = nominal shaft size +.001 in/-.000 in *(+0.03 mm/-0.00 mm)*

Base to centerline tolerance, +/-.005"

Open and Closed End Caps available on all shaft sizes

For Selection Guide, Load Ratings and Speed Limits see Rexnord PT Select Series Engineering section on pages 194 - 197.

Note: Dimensions subject to change. Certified dimensions of ordered material furnished on request.

FB

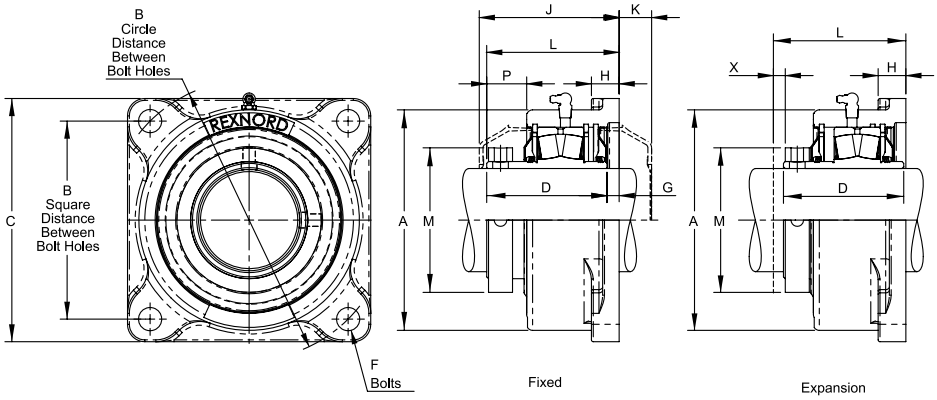

Product Features

Corrosion-resistant powder coating
Cast iron housing
Misalignment capabilities - total of 2°
Triple lip seal standard; optional clearance seal
Factory lubricated
90° grease fitting standard; straight fitting provided in box

Bearing Dimensions

Size Code	Shaft Diameter	Fixed Part Number	Expansion Part Number	A	B Distance Between Bolt Holes Square	B Distance Between Bolt Holes Circle	C	D	F Bolts	G	H	J	K	L Mounting Surface to Collar Face	M	P	X	Approx. Weight
4	1-7/16	FB-107-T	FB-107-TE	3.81	3.54	5.00	4.78	2.71	1/2	0.27	0.50	3.25	0.95	2.98	2.30	1.00	0.22	4.74
5	1-11/16	FB-111-T	FB-111-TE	4.00	3.89	5.50	5.13	2.76	1/2	0.25	0.53	3.28	0.93	3.01	2.58	1.00	0.22	5.66
6	1-15/16	FB-115-T	FB-115-TE	4.25	4.07	5.75	5.31	2.84	1/2	0.31	0.59	3.42	1.03	3.15	2.88	1.09	0.22	6.32
7	2-3/16	FB-203-T	FB-203-TE	4.60	4.51	6.38	5.89	2.99	5/8	0.28	0.56	3.55	1.12	3.27	3.25	1.15	0.26	7.64
8	2-7/16	FB-207-T	FB-207-TE	5.63	4.77	6.75	6.13	3.55	5/8	0.39	0.64	4.21	1.17	3.94	3.55	1.29	0.34	11.74
	2-1/2	FB-208-T	FB-208-TE															
9	2-11/16	FB-211-T	FB-211-TE	6.10	5.57	7.88	7.19	3.65	3/4	0.36	0.75	4.28	1.21	4.01	4.04	1.33	0.34	16.40
	2-15/16	FB-215-T	FB-215-TE															
10	3-7/16	FB-307-T	FB-307-TE	7.48	6.72	9.50	8.25	4.12	3/4	0.41	0.94	4.81	1.17	4.54	4.90	1.40	0.34	26.21
	3-1/2	FB-308-T	FB-308-TE															
11	3-15/16	FB-315-T	FB-315-TE	8.22	7.60	10.75	9.25	4.64	7/8	0.38	1.06	5.32	1.38	5.02	5.63	1.61	0.34	35.08

Additional Notes

Please call 1-866-REXNORD for availability

Lubrication fitting tap size, 1/8" PT

Bore size = nominal shaft size +.001 in/-.000 in *(+0.03 mm/-0.00 mm)*

Open and Closed End Caps available on all shaft sizes

For Selection Guide, Load Ratings and Speed Limits see Rexnord PT Select Series Engineering section on pages 194 - 197.

Note: Dimensions subject to change. Certified dimensions of ordered material furnished on request.

EFB

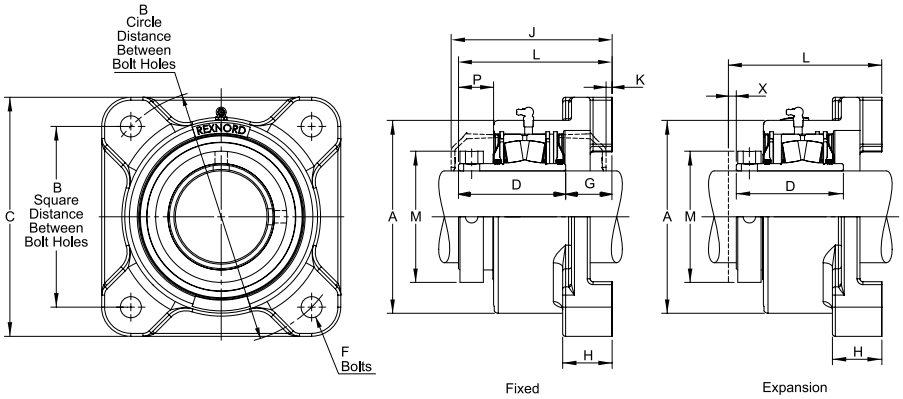

Product Features

Type E Interchange
Corrosion-resistant powder coating
Cast iron housing
Misalignment capabilities - total of 2°
Triple lip seal standard; optional clearance seal
Factory lubricated
90° grease fitting standard; straight fitting provided in box

Bearing Dimensions

Size Code	Shaft Diameter	Fixed Part Number	Expansion Part Number	A	B Distance Between Bolt Holes Square	B Distance Between Bolt Holes Circle	C	D	F Bolts	G	H	J	K	L Mounting Surface to Collar Face	M	P	X	Approx. Weight
4	1-7/16	EFB-107-T	EFB-107-TE	3.81	3.50	4.95	4.62	2.71	1/2	0.53	1.06	3.50	0.69	3.24	2.30	1.00	0.23	5.24
5	1-11/16	EFB-111-T	EFB-111-TE	4.00	4.12	5.83	5.37	2.76	1/2	0.72	1.19	3.75	0.46	3.48	2.58	1.00	0.22	6.83
6	1-15/16	EFB-115-T	EFB-115-TE	4.25	4.38	6.19	5.62	2.84	1/2	0.78	1.18	3.89	0.55	3.62	2.88	1.09	0.26	7.86
7	2-3/16	EFB-203-T	EFB-203-TE	4.60	4.87	6.89	6.25	2.99	5/8	0.93	1.38	4.20	0.46	3.93	3.25	1.15	0.26	9.75
8	2-7/16	EFB-207-T	EFB-207-TE	5.63	5.37	7.60	6.87	3.55	5/8	0.98	1.50	4.80	0.59	4.53	3.55	1.29	0.34	15.07
	2-1/2	EFB-208-T	EFB-208-TE															
9	2-11/16	EFB-211-T	EFB-211-TE	6.10	6.00	8.49	7.75	3.65	3/4	1.09	1.61	5.01	0.48	4.74	4.04	1.33	0.34	20.74
	2-15/16	EFB-215-T	EFB-215-TE															
10	3-7/16	EFB-307-T	EFB-307-TE	7.48	7.00	9.90	9.25	4.12	3/4	1.24	1.87	5.64	0.34	5.36	4.90	1.40	0.34	30.98
	3-1/2	EFB-308-T	EFB-308-TE															
11	3-15/16	EFB-315-T	EFB-315-TE	8.22	7.75	10.96	10.25	4.64	7/8	1.99	2.12	6.70	0.23	6.63	5.63	1.61	0.34	43.90

Additional Notes

Please call 1-866-REXNORD for availability
Lubrication fitting tap size, 1/8" PT
Bore size = nominal shaft size +.001 in/-.000 in *(+0.03 mm/-0.00 mm)*
Open and Closed End Caps available on all shaft sizes
For Selection Guide, Load Ratings and Speed Limits see Rexnord PT Select Series Engineering section on pages 194 - 197.
Note: Dimensions subject to change. Certified dimensions of ordered material furnished on request.

FC

Reminder: Size 12 Has 6 Mounting Bolts!

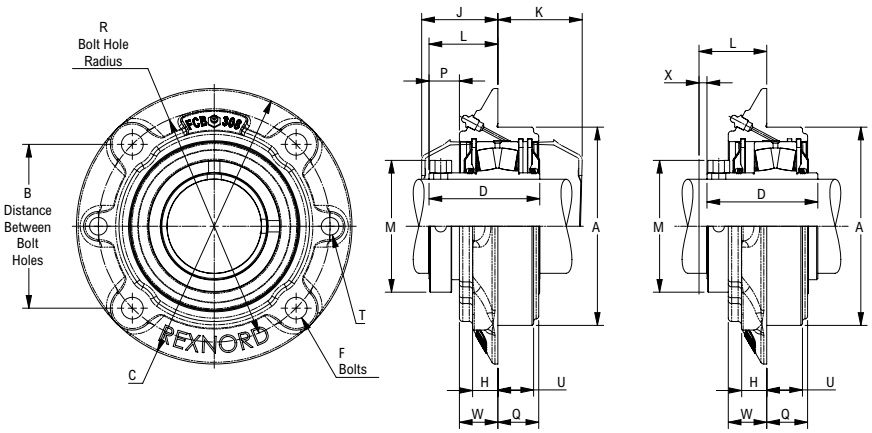

Product Features

Type E Interchange
Corrosion-resistant powder coating
Cast iron housing
Misalignment capabilities - total of 2°
Triple lip seal standard; optional clearance seal
Factory lubricated
Straight grease fitting standard

Bearing Dimensions

Size Code	Shaft Diameter	Fixed Part Number	Expansion Part Number	A Pilot Diameter	B Distance Between Bolt Holes	C	D	F Bolts	H	J	K	L Mounting Surface to Collar Face	M	P	Q	R Bolt Circle Radius	T	U	W	X	Approx. Weight
4-Bolt																					
4	1-7/16	FC-107-T	FC-107-TE	3.63	3.10	5.25	2.71	3/8	0.50	1.76	2.44	1.49	2.30	0.99	1.19	2.19	3/8-16	0.75	0.50	0.22	4.19
5	1-11/16	FC-111-T	FC-111-TE	4.25	3.62	6.13	2.76	7/16	0.50	1.79	2.43	1.52	2.58	0.91	1.25	2.56	7/16-14	0.88	0.61	0.23	6.15
6	1-15/16	FC-115-T	FC-115-TE	4.50	3.80	6.38	2.84	7/16	0.56	1.86	2.58	1.59	2.88	1.03	1.23	2.69	7/16-14	0.88	0.56	0.26	6.79
7	2-3/16	FC-203-T	FC-203-TE	5.00	4.24	7.13	2.99	1/2	0.56	1.88	2.78	1.61	3.25	0.95	1.42	3.00	1/2-13	1.00	0.66	0.26	9.16
8	2-7/16	FC-207-T	FC-207-TE	5.50	4.60	7.63	3.55	1/2	0.63	2.26	3.13	1.99	3.55	1.23	1.56	3.25	1/2-13	1.00	0.76	0.34	11.51
	2-1/2	FC-208-T	FC-208-TE																		
9	2-11/16	FC-211-T	FC-211-TE	6.38	5.30	8.75	3.65	5/8	0.75	2.36	3.13	2.09	4.04	1.09	1.63	3.75	5/8-11	1.25	1.00	0.34	17.69
	2-15/16	FC-215-T	FC-215-TE																		
10	3-7/16	FC-307-T	FC-307-TE	7.38	6.10	10.25	4.12	3/4	0.94	2.84	3.14	2.56	4.90	1.13	1.52	4.31	3/4-10	1.27	1.43	0.34	26.19
	3-1/2	FC-308-T	FC-308-TE																		
11	3-15/16	FC-315-T	FC-315-TE	8.13	6.63	10.88	4.64	3/4	1.13	3.19	3.51	2.89	5.63	1.46	1.75	4.69	3/4-10	1.47	1.43	0.34	33.50
6-Bolt																					
12	4-7/16	FC-407-T	FC-407-TE	10.25	5.88	13.58	5.14	3/4	1.00	3.58	3.54	3.28	6.19	1.39	1.85	5.88	3/4-10	1.45	1.89	0.34	57.64

Additional Notes

Please call 1-866-REXNORD for availability
Lubrication fitting tap size, 1/8" PT
Bore size = nominal shaft size +.001 in/-.000 in *(+0.03 mm/-0.00 mm)*
Pilot diameter tolerance, +.000 in/-.002 in *(+0.00 mm/-0.05 mm)*
Bore tolerance for mounting, +.002 in/-.000 in *(+0.05 mm/-0.00 mm)*
Open and Closed End Caps available on all shaft sizes
For Selection Guide, Load Ratings and Speed Limits see Rexnord PT Select Series Engineering section on pages 194 - 197.
Note: Dimensions subject to change. Certified dimensions of ordered material furnished on request.

Spherical Roller Bearings
Split Housings: Link-Belt

Contents

	Page
Features and Benefits	206
Nomenclature	208
Engineering	210
Dimensions	
Pillow Blocks	224
Take-up Assemblies	241
Replacement Parts	243

Industries Served

Mining
Forest Products
Aggregates
Steel
Air Handling
Construction
Package Handling
Wastewater Treatment

Series 6600, 6800, 6900, 7600, 7800, 7900, 22300, 22600 Spherical Roller Bearing

Self-aligning spherical roller bearing pillow blocks and take-ups provide high load carrying capacity for radial or combination radial and thrust loads.

They are designed for use on conveyors, dryers, road building equipment, runout tables, fans, crushers, hammermills and many other high-precision, heavy-duty applications.

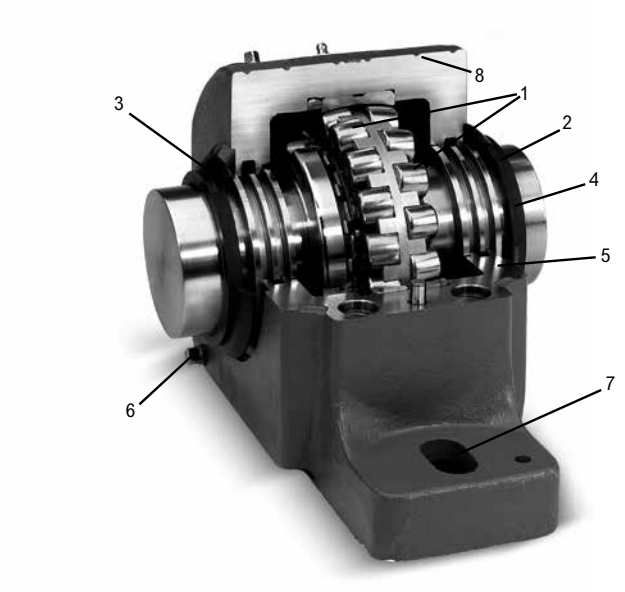

1. Direct or Adapter Mounting

Spherical roller bearings may be direct or adapter mounted. Housings have provision for fixed or expansion mounting.

2. Choice of Seals

Type R multilabyrinth, D5 Pentac®, or Type D8 independently flushable seals — effectively retain lubricant and exclude contaminants.

3. Removable Housing Cap

Facilitates bearing mounting, inspection and maintenance.

4. Mating Surfaces are Machined

Caps and bases matched and marked.

5. Base and Cap are Dowelled for Accurate Assembly and Security

6. Oil or Grease Lubrication Ready

Large lubricant reservoir in base prolongs lubrication interval.

7. Slotted Bolt Holes

Slotted bolt holes in base facilitate mounting; machined finish on base for firm seating on supporting surface. Pry slots for easy cap removal.

8. Dimpled Flats for Bearing Monitor Probes

A Seal Choice for Every Environment

Metal Triple-Ring R Seal

This industry standard seal provides a labyrinth grease chamber between the housing grooves and the seal rings. Operates at high speed; good for moderate dust, dirt or moisture.

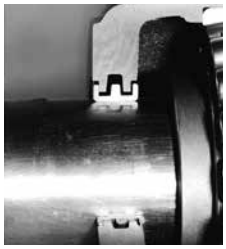

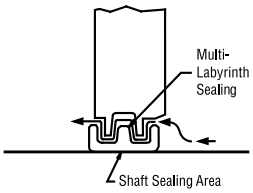

D5 Pentac 5-Point Sealing System

Rugged contact lip seal, molded on a Kevlar body, rotates with the shaft. The Pentac seal acts as a flinger, keeping debris away from the seal area, and provides five seal points.

D5 Pentac 5-Point Sealing System

1 - Seals shaft
2 - Seals housing
3 - Creates a grease chamber to prevent bearing contamination
4 - Acts as a flinger
5 - Grease chambers created by multi-labyrinth chamber

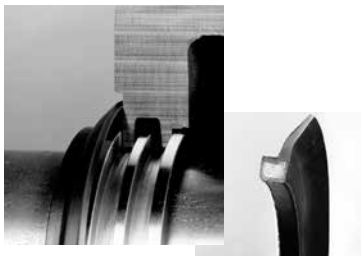

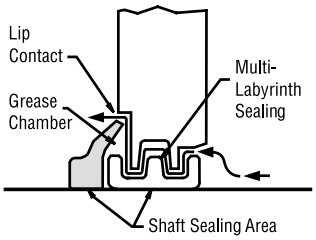

Seal Comparison

	Triple Ring R Seal	Pentac D5 Seal	Taconite D8 Seal	Wash Down T Seal
Dirt/Dust	x	xx	xxx	x
Speed	xxx	xx	x	xx
Wash Downs	x	xx	xx	xxx

x **Good** xx **Better** xxx **Best**

D8 Taconite Sealing System

A rugged cast carrier protects a metal labyrinth outboard seal and a spring-loaded inboard seal. When independently lubricated, the D8 system directs the grease between the two seals, purging all contaminants before they can reach the bearing chamber. Thousands are in use in the toughest applications worldwide.

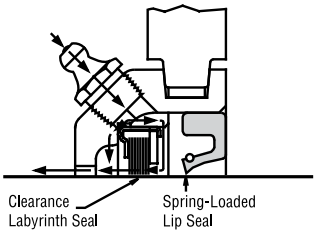

Exclusive T Water Seal

Available on special order, this patented seal was developed for use on equipment which experiences constant water splash or frequent wash down. The unique T-shaped lip seal rides in a stainless steel carrier and rotates with the shaft. It seals the shaft and its one-way, double-contact lips allow for grease purge from the bearing chamber, but prevent the reverse flow of water or debris. The T seal is the standard in the environmental equipment industry. This bearing offers Pillow Blocks with special features for severe wash down environments. Black Rilsan Nylon 11 coated housings, stainless steel hardware and end caps or solid closed end housings, and the patented T contact water seal are the standard features of the BP-LB6800 series. Units may be further modified to meet specific needs.

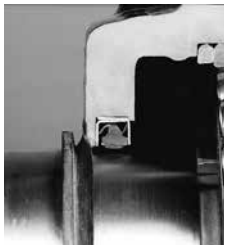

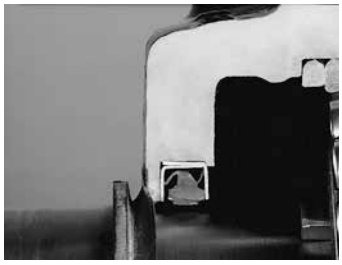

Shaft	Part Number
1 7/16"	BP-LB6823
2 3/16"	BP-LB6835*
2 7/16"	BP-LB6839*
2 11/16"	BP-LB6843*
2 15/16"	BP-LB6847*
3 3/16"	BP-LB6851*
3 15/16"	BP-LB6863F
4 1/2"	BP-LB6872F
4 15/16"	BP-LB6879F

*For four-bolt base add suffix "F."

Unit with one side solid cast closed, add "C"suffix.

6600, 6800, 6900, 7600, 7800, 7900 Nomenclature

P E - LB 79 65 F B C -T2/ 3

Symbol	Description
BP	Pillow block; two-piece; black Rilsan nylon II coated
P	Pillow block; two-piece
PK	Pillow block; two-piece cast steel housing (66, 68, 76 and 78 series)
DS	Take-up, welded steel frame, hinged top
E	Expansion Mounting
LB	Spherical roller bearing
66	Adapter mounted with 23000LBK bearing
68	Adapter mounted with 22200LBK bearing
69	Adapter mounted with 22300LBK bearing
76	Direct shaft mounted with 23000LB bearing
78	Direct shaft mounted with 22200LB bearing
79	Direct shaft mounted with 22300LB bearing
M	Metric bore adapter mount
39	Shaft diameter in 16ths of an inch — adapter mounted
65	Inner ring bore in millimeters — direct shaft mounted
60	Shaft diameter in millimeters — adapter mounted
F	Four-bolt base pillow block
None	"T" Water seals
D5	Pentac 5-point seals
D8	Independently flushable seal
B	Felt contact seal
R	Multi-labyrinth seal
C	Closed end unit
T2	Locknut and washer included (76, 78, 79 series)
2	Internal clearance less than C0
0	Basic C0 internal clearance
None	Internal clearance greater than C0 (standard)
4	Internal clearance greater than C3
12	Take-up adjustment, inches

SAF22600, SAF22300 Nomenclature

F SAF S E 226 17 C T 215 4

Symbol	Description
F	Four-bolt base
SAF	Pillow block; two-piece; inch series; labyrinth seal
None	Gray Iron
S	Cast Steel
	Housing Material
None	Fixed Unit — Furnish with spacer ring
E	Expansion Unit
223	Direct shaft mounted with 22300LB spherical roller bearing
226	Adapter mounted with 22300LBK spherical roller bearing
17	One-fifth bearing bore diameter in mm
C	Closed end unit
T	Lockwasher and locknut NOT INCLUDED (22300 Series)
None	Direct shaft mounted shaft size
215	Adapter mounted shaft size in inch and 1/16, i.e., 215 is 2 15/16 inch shaft size
2	Internal clearance less than C0
0	Basic internal clearance
None	Internal clearance greater than C0 (standard)
4	Internal clearance greater than C3
	Radial Clearance

Large Bore Nomenclature

P LB 222 44 K C 71516

Symbol	Description
P	Pillow block; two-piece
PK	Pillow block; two-piece cast steel
LB	Spherical Roller Bearing
222	Direct shaft mounted with 22200LB bearing
223	Direct shaft mounted with 22300LB bearing
225	Adapter mounted with 22200LBK bearing
226	Adapter mounted with 22300LBK bearing
230	Adapter or direct shaft mounted with 23000 bearing
231	Adapter or direct shaft mounted with 23100 bearing
232	Adapter or direct shaft mounted with 23200 bearing
44	One-fifth bearing bore diameter in mm
K	Tapered bore bearing
C	End closure
71516	7 15/16" – shaft size

Seal Rating Guide

Application Conditions	Seal Ratings			
	LER Clearance	PenTac Sealing System	Taconite Sealing System	Water Seal
	R	D5	D8	T
Shaft Position				
Horizontal Shaft	4	4	4	4
Vertical Shaft	1	4	4	4
Operating Temperature				
Below -40°F	4	1	1	1
-40°F to 0°F	4	3	3	3
0°F to +250°F	4	4	4	4
+250°F to +400°F	4	0	0	0
Over 400°F	4	0	0	0
Speed				
Equal to / Less than limit in chart	4	4	4	4
More than limit in chart	4	1	1	1
Vibration/Shock				
Occasional - Mild	3	4	4	4
Occasional - Severe	2	4	4	4
Continuous - Mild	1	3	3	3
Continuous - Severe	0	3	3	3
Abrasive Material				
Coarse - Over #10 Mesh	4	4	4	4
Small - #10 to #50 Mesh	3	4	4	4
Fine - #50 to #200 Mesh	1	3	4	3
Very fine - Under #200 Mesh	0	2	4	2
"Caking or buildup" (cement, etc.)	2	3	4	3
Moisture				
Splash	2	3	4	4
Rain	2	3	4	4
Saturated Atmosphere	1	3	4	4
Flooding	0	1	3	4
Pressure Wash	0	1	4	4
Fibrous Material				
Short Fibers (lint, etc.)	1	4	4	4
Long Fibers (grass, etc.)	1	4	4	4
Chemical				
Acid Fumes and Liquids	1	1	1	1
Alkaline Fumes and Liquids	1	1	1	1

Rating Code

4 - Excellent - Best seal for conditions listed.

3 - Good - Sealability is above average.

2 - Fair - Seal performs under intermittent conditions.

1 - Limited - Actual conditions must be known to evaluate sealability. Check "General Characteristic Guide" for construction as well as benefits and limitations for further evaluation.

0 - Not acceptable - Will not effectively perform seal functions. Contact Rexnord for special assistance in the realm of materials and designs.

Series 6600, 6800, 6900, 7600, 7800, 7900, 23000, 23100 and 23200 Selection Guide

To select a pillow block, determine the applied radial load, the applied thrust load, the desired Rating Life, the required minimum shaft size, and applicable operating conditions. The procedure shown here will aid in selecting a pillow block to meet an L_{10} design life. The formulas for calculating life expectancy should be used to determine the Rating Life L_{10} for the pillow block selected. Spherical roller bearing pillow blocks are available in Series 6600, 6800, 6900, 7600, 7800, 7900, 23000, 23100 and 23200. Because a number of series are available, several different pillow blocks that will fulfill and L_{10} life requirement can often be chosen.

Some of the factors to consider when choosing between series are: cost, speed limit, minimum shaft diameter, thrust load, space limitations, and type of shaft mounting.

The selection procedures and rating formulas shown here are in agreement with The American Bearing Manufacturers Association Standards and ANSI/ ABMA Standards STD 11-1990. Ratings are based on fatigue life.

The Rating Life L_{10} or fatigue life at 90% reliability is the usual basis for bearing selection.

For radial load applications only, Table 3 can be used to select a unit or to determine L_{10} life expectancy.

To assure a satisfactory bearing application, fitting practice, mounting, lubrication, sealing, static rating, housing strength, operating conditions and maintenance must be considered.

Steps for Selection

Step 1

Determine an appropriate L_{10} design life.

Type of service	Operating time, hours per year	Design life, years	L_{10} design life, hours
Heavy seasonal usage	1,400 to 1,600	4-6	8,000
Industrial—8 hour shift	2,000	10	20,000
Industrial—16 hour shift	4,000	10	40,000
Industrial—continuous	8,700	10	80,000 to 100,000
Industrial—High reliability	—	—	120,000 to 300,000

Step 2

Determine a required $\left(\frac{C}{P}\right)$ from Table 1.

Step 3

Calculate the required C and select a roller bearing pillow block.

a For radial load only: $P = F_r$

Required C = $\left(\frac{C}{P}\right)$ P using $\left(\frac{C}{P}\right)$ from Step 2

Select a roller bearing pillow block from Table 2 or Table 4 having a basic load rating C equal to or greater than the required C.

b For combined radial and thrust loads:

Select a roller bearing pillow block of the desired shaft size from Table 2 or Table 4 Calculate the ratio of thrust load F_a to the radial load F_r.

$$\frac{F_a}{F_r}$$

Calculate the equivalent radial load P

$$P = XF_r + YF_a$$

If $\frac{F_a}{F_r}$ is equal to or less than e, then $P = X_1F_r + Y_1F_a$

If $\frac{F_a}{F_r}$ is greater than e, then $P = X_2F_r + Y_2F_a$

For values of e, X_1, Y_1, X_2, and Y_2, see Table 2 or Table 4

Required C = $\left(\frac{C}{P}\right)$ P using $\left(\frac{C}{P}\right)$ from Step 2

Consult the bearing rating Table 2 or Table 4, to see if the selected bearing meets or exceeds the required C. The life expectancy of other sizes and series of bearings can be calculated similarly.

Selection

Symbols for formulas:

C = basic load rating, pounds (or newtons)
Co = static load rating, pounds (or newtons)
e = a reference value
F_a = thrust load, pounds (or newtons)
F_r = radial load, pounds (or newtons)
L_{10} = rating life, hours
n = speed, revolutions per minute
P = equivalent radial load, pounds (or newtons)
X = radial factor
Y = thrust factor

Table 1 • Relation of L_{10} life and speed to $\left(\frac{C}{P}\right)$

Bearing Life Hours L10	Speed, n								
	50	100	200	300	400	500	600	700	800
3000	1.93	2.38	2.93	3.31	3.61	3.86	4.07	4.27	4.44
4000	2.11	2.59	3.19	3.61	3.93	4.20	4.44	4.65	4.84
5000	2.25	2.77	3.42	3.86	4.20	4.50	4.75	4.97	5.18
6000	2.38	2.93	3.61	4.07	4.44	4.75	5.02	5.25	5.47
8000	2.59	3.19	3.93	4.44	4.84	5.18	5.47	5.73	5.96
10000	2.77	3.42	4.20	4.75	5.18	5.54	5.85	6.12	6.37
12000	2.93	3.61	4.44	5.02	5.47	5.85	6.18	6.47	6.73
14000	3.07	3.78	4.65	5.25	5.73	6.12	6.47	6.77	7.05
16000	3.19	3.93	4.84	5.47	5.96	6.37	6.73	7.05	7.34
18000	3.31	4.07	5.02	5.66	6.18	6.60	6.97	7.30	7.60
20000	3.42	4.20	5.18	5.85	6.37	6.81	7.20	7.54	7.85
25000	3.65	4.50	5.54	6.25	6.81	7.29	7.70	8.06	8.39
30000	3.86	4.75	5.85	6.60	7.20	7.70	8.13	8.51	8.86
35000	4.04	4.97	6.12	6.92	7.54	8.06	8.51	8.92	9.28
40000	4.20	5.18	6.37	7.20	7.85	8.39	8.86	9.28	9.66
45000	4.36	5.36	6.60	7.46	8.13	8.69	9.18	9.61	10.00
50000	4.50	5.54	6.81	7.70	8.39	8.97	9.48	9.92	10.30
60000	4.75	5.85	7.20	8.13	8.86	9.48	10.00	10.50	10.90
70000	4.97	6.12	7.54	8.51	9.28	9.92	10.50	11.00	11.40
80000	5.18	6.37	7.85	8.86	9.66	10.30	10.90	11.40	11.90
90000	5.36	6.60	8.13	9.18	10.00	10.70	11.30	11.80	12.30
100000	5.54	6.81	8.39	9.48	10.30	11.00	11.70	12.20	12.70
150000	6.25	7.70	9.48	10.70	11.70	12.50	13.20	13.80	14.40
200000	6.81	8.39	10.30	11.70	12.70	13.60	14.40	15.00	15.70
	Speed, n								
	900	1000	1200	1500	1800	2400	3000	3600	6000
3000	4.60	4.75	5.02	5.36	5.66	6.18	6.60	6.97	8.13
4000	5.02	5.18	5.47	5.85	6.18	6.73	7.20	7.60	8.86
5000	5.36	5.54	5.85	6.25	6.60	7.20	7.70	8.13	9.48
6000	5.66	5.85	6.18	6.60	6.97	7.60	8.13	8.59	10.00
8000	6.18	6.37	6.73	7.20	7.60	8.29	8.86	9.36	10.90
10000	6.60	6.81	7.20	7.70	8.13	8.86	9.48	10.00	11.70
12000	6.97	7.20	7.60	8.13	8.59	9.36	10.00	10.60	12.30
14000	7.30	7.54	7.96	8.51	8.99	9.80	10.50	11.10	12.90
16000	7.60	7.85	8.29	8.86	9.36	10.20	10.90	11.50	13.40
18000	7.88	8.13	8.59	9.18	9.70	10.60	11.30	11.90	13.90
20000	8.13	8.39	8.86	9.48	10.00	10.90	11.70	12.30	14.40
25000	8.69	8.97	9.48	10.10	10.70	11.70	12.50	13.20	15.40
30000	9.18	9.48	10.00	10.70	11.30	12.30	13.20	13.90	16.20
35000	9.61	9.92	10.50	11.20	11.80	12.90	13.80	14.60	17.00
40000	10.00	10.30	10.90	11.70	12.30	13.40	14.40	15.20	17.70
45000	10.40	10.70	11.30	12.10	12.80	13.90	14.90	15.70	18.30
50000	10.70	11.00	11.70	12.50	13.20	14.40	15.40	16.20	18.90
60000	11.30	11.70	12.30	13.20	13.90	15.20	16.20	17.10	20.00
70000	11.80	12.20	12.90	13.80	14.60	15.90	17.00	17.90	20.90
80000	12.30	12.70	13.40	14.40	15.20	16.50	17.70	18.70	21.80
90000	12.80	13.20	13.90	14.90	15.70	17.10	18.30	19.40	22.60
100000	13.20	13.60	14.40	15.40	16.20	17.70	18.90	20.00	23.30
150000	14.90	15.40	16.20	17.30	18.30	20.00	21.40	22.60	26.30
200000	16.20	16.70	17.70	18.90	20.00	21.80	23.30	24.60	28.70

Basic Formula

$$\left(\frac{C}{P}\right) = \left(\frac{L_{10} \times n \times 60}{1{,}000{,}000}\right)^{3/10}$$

$$L_{10} = \frac{\left(\frac{C}{P}\right)^{10/3} \times 1{,}000{,}000}{n \times 60}$$

Life Expectancy

To calculate the Rating Life L_{10} of any selected or trial bearing:

Step 1

Determine the equivalent radial load P.

a For radial load only:

$$P = F_r$$

b For combined radial and thrust load:

$$P = XF_r + YF_a$$

if $\frac{F_a}{F_r}$ is equal to or less than e, then

$$P = X1F_r + Y1F_a$$

if $\frac{F_a}{F_r}$ is greater than e, then

$$P = X_2F_r + Y_2F_a$$

For values of e, X1, Y1, X2, and Y2, consult the appropriate bearing rating Table 2 Table 4.

Step 2

Calculate the ratio of the basic load rating C to the equivalent radial load.

$$\left(\frac{C}{P}\right)$$

Step 3

Approximate the bearing life from Table 1.

Live Adjustment

The Rating Life, L_{10}, may be modified for some applications in accordance with the formula

$$L_n = a_1a_2a_3L_{10}$$

where L_n = Adjusted life for (100-n) % reliability,
a_1 = Life adjustment factor for reliability
a_2 = Life adjustment factor for material and processing
a_3= Life adjustment factor for operating conditions.

For most normal applications, all factors will be taken as 1, and the Rating Life used as the selection basis or life estimate. In addition, as long as standard catalog bearings are used, a_2 will be normally set equal to one.

The factor a_3 covers such things as lubrication, misalignment, and temperature. Some conditions that could yield a_3 significantly different than unity include speeds less than 20000 DN or greater than 200000 DN, temperatures below –40°F *(–40°C)* or above 275°F *(135°C)*. For other possible conditions, as well as additional information on life adjustment factors, consult Rexnord Bearing Division.

Table 2 • 6600, 6800, 7600, 7800 Series Load Ratings and Speed Limits

Basic Bearing Number				Bearing Size Number	Co Static Load Rating	C Basic Load Rating	Approximate Speed Limit RPM*			e	$\frac{Fa}{Fr} \le e$		$\frac{Fa}{Fr} > e$	
Adapter Mounted		Direct Shaft Mounted												
Shaft Diameter inches/mm	Number	Bearing Seat mm	Number		pounds/ newtons	pounds/ newtons	Oil	Grease	D5 Seal 1mm Push-in#		X1	Y1	X2	Y2
1 7/16	LB6823	…	…	22209LB	23600	20800	6200	5300	5300	0.26	1.00	2.6	0.67	3.9
1 1/2	LB6824													
40	LB68M40				105000	92500								
1 11/16	LB6827	…	…	22210LB	25500	22000	5500	5000	5000	0.26	1.00	2.8	0.67	4.2
1 3/4	LB6828													
45	LB68M45				113000	97900								
1 15/16	LB6831	…	…	22211LB	32500	27000	5000	4500	4500	0.23	1.00	2.9	0.67	4.4
2	LB6832													
50	LB68M50				145000	120000								
2 3/16	LB6835	…	…	22213LB	46500	38000	4300	3800	3800	0.24	1.00	2.8	0.67	4.2
60	LB68M60				207000	169000								
2 7/16	LB6839	75	LB7875	22215LB	53000	41500	3700	3400	3400	0.22	1.00	3.1	0.67	4.6
65	LB68M65				236000	185000								
2 11/16	LB6843	80	LB7880	22216LB	58500	46500	3500	3200	3200	0.22	1.00	3.1	0.67	4.7
70	LB68M70				260000	207000								
2 15/16	LB6847	85	LB7885	22217LB	73500	58500	3250	3000	3000	0.22	1.00	3.0	0.67	4.5
3	LB6848													
75	LB68M75				327000	260000								
3 3/16	LB6851	90	LB7890	22218LB	81500	64000	3000	2600	2600	0.23	1.00	2.9	0.67	4.3
80	LB68M80				363000	285000								
3 7/16	LB6855	100	LB78100	22220LB	104000	80000	2800	2200	2200	0.24	1.00	2.8	0.67	4.2
3 1/2	LB6856													
90	LB68M90				463000	356000								
3 11/16	LB6859	110	LB78110	22222LB	132000	102000	2500	2000	2000	0.25	1.00	2.7	0.67	4.0
3 15/16	LB6863													
4	LB6864				587000	454000								
100	LB68M100													
4 3/16	LB6867	120	LB78120	22224LB	163000	120000	2300	1900	1900	0.25	1.00	2.7	0.67	4.0
110	LB68M110				725000	534000								
4 7/16	LB6871	130	LB78130	22226LB	196000	143000	2100	1800	1800	0.26	1.00	2.6	0.67	3.9
4 1/2	LB6872													
115	LB68M115				872000	636000								
4 15/16	LB6879	140	LB78140	22228LB	228000	166000	1950	1700	1700	0.25	1.00	2.7	0.67	4.0
5	LB6880													
125	LB68M125				1010000	738000								

Table 2 • 6600, 6800, 7600, 7800 Series Load Ratings and Speed Limits (continued)

Basic Bearing Number				Bearing Size Number	Co Static Load Rating	C Basic Load Rating	Approximate Speed Limit RPM*			e	$\frac{Fa}{Fr} \le e$		$\frac{Fa}{Fr} > e$	
Adapter Mounted		Direct Shaft Mounted												
Shaft Diameter inches/mm	Number	Bearing Seat mm	Number		pounds/ newtons	pounds/ newtons	Oil	Grease	D5 Seal 1mm Push-in#		X1	Y1	X2	Y2
5 3/16 135	LB6883 LB68M135	150	LB78150	22230LB	270000 1200000	190000 845000	1850	1600	1600	0.25	1.00	2.7	0.67	4.0
5 7/16 140	LB6887 LB68M140	160	LB78160	22232LB	310000 1380000	216000 961000	1700	1500	1500	0.26	1.00	2.6	0.67	3.9
5 15/16 6 150	LB6895 LB6896 LB68M150	170	LB78170	22234LB	345000 1530000	250000 1110000	1600	1300	1300	0.26	1.00	2.6	0.67	3.9
6 7/16 6 1/2 160	LB68103 LB68104 LB68M160	180	LB78180	22236LB	365000 1620000	255000 1130000	1500	1300	1300	0.25	1.00	2.7	0.67	4.0
6 15/16 7 170	LB68111 LB68112 LB68M170	190	LB78190	22238LB	415000 1850000	270000 1200000	1400	1200	1200	0.28	1.00	2.4	0.67	3.6
7 3/16 180	LB68115 LB68M180	200	LB78200	22240LB	450000 2000000	300000 1330000	1300	1100	1100	0.29	1.00	2.3	0.67	3.5
7 1/2 7 15/16 8 200	LB68120 LB68127 LB68128 LB68M200	220	LB78220	22244LB	550000 2450000	365000 1620000	1200	1000	1000	0.29	1.00	2.3	0.67	3.5
8 7/16 8 15/16	LB22548K8716 LB22548K81516	240	LB22248	22248LB	650000 2890000	420500 1870000	950	750	N/A	0.27	1.00	2.5	0.67	3.7
8 7/16 8 1/2 8 15/16 9 220	LB66135 LB66136 LB66143 LB66144 LB66M220	240	LB76240	23048LB	490000 2180000	260000 1160000	1100	1000	1000	0.25	1.00	2.7	0.67	4.1
9 7/16 9 1/2 9 15/16 10 10 7/16 10 1/2 260	LB66B151 LB66B152 LB66159 LB66160 LB66167 LB66168 LB66M260	280	LB76280	23056LB	670000 2980000	345000 1530000	950	850	850	0.25	1.00	2.7	0.67	4.1

* Speed limits are based on the following:

1. Type R seals properly aligned.
   a. For the type B seals, limit is 800 surface feet per minute (4.0 m/s) with good alignment.
   b. For type D8 seals, limit is 1500 surface feet per minute (7.6 m/s) with good alignment.
2. Proper operating internal clearance.
3. Adequate lubrication and maintenance (special lubricants and/or more frequent relubrication may be required).
4. Normal room temperature environment and no extraneous heat sources, such that bearing operating temperature does not exceed 100°C (212°F).
5. Equivalent radial load not greater than 7% of C.
6. Axial load, if any, not greater than 20% of radial load.

D5 Pentac speed limits in the chart are based on pushing the Pentac seal against the housing face a distance of 1 mm as specified by the service instructions. The Pentac seal can be pressed in a distance of 2 mm for high contaminant environments. The speed limit at a 2 mm "Push-In" distance should be limited to 80% of those listed in the chart.

Table 3 • Radial Load Ratings in Pounds at Various RPM for Appropriate L_{10} Life Hours

Basic Unit Number		L_{10} Minimum Life, hours	Radial Load Ratings, Pounds																	
			Speed, RPM																	
Adapter Mounted	Direct Shaft Mounted		50	100	200	300	400	500	600	700	800	900	1000	1200	1500	1800	2000	2500	3000	3500
LB6823		8000	8017	6512	5289	4683	4296	4018	3804	3632	3490	3368	3264	3090	2890	2736	2651	2479	2347	2241
LB6824		20000	6090	4947	4018	3558	3264	3052	2890	2759	2651	2559	2479	2347	2195	2078	2014	1883	1783	1703
LB68M40		40000	4947	4018	3264	2890	2651	2479	2347	2241	2153	2078	2014	1907	1783	1688	1636	1530	1448	1383
		100000	3758	3052	2479	2195	2014	1883	1783	1703	1636	1579	1530	1448	1355	1282	1243	1162	1100	1051
LB6827		8000	8479	6887	5594	4954	4544	4250	4024	3842	3691	3563	3452	3268	3056	2894	2804	2622	2483	2370
LB6828		20000	6441	5232	4250	3763	3452	3228	3056	2918	2804	2706	2622	2483	2322	2198	2130	1992	1886	1801
LB68M45		40000	5232	4250	3452	3056	2804	2622	2483	2370	2277	2198	2130	2017	1886	1786	1730	1618	1532	1463
		100000	3975	3228	2622	2322	2130	1992	1886	1801	1730	1670	1618	1532	1433	1356	1314	1229	1164	1111
LB6831		8000	10406	8453	6866	6079	5577	5216	4938	4715	4530	4372	4236	4011	3751	3551	3441	3218	3047	2909
LB6832		20000	7905	6421	5216	4618	4236	3962	3751	3582	3441	3322	3218	3047	2850	2698	2614	2445	2315	2210
LB68M50		40000	6421	5216	4236	3751	3441	3218	3047	2909	2795	2698	2614	2475	2315	2191	2123	1986	1880	1795
		100000	4878	3962	3218	2850	2614	2445	2315	2210	2123	2049	1986	1880	1758	1665	1613	1508	1428	1364
LB6835		8000	14646	11896	9663	8556	7849	7340	6950	6636	6375	6154	5962	5645	5279	4998	4843	4529	4288	4094
LB68M60		20000	11126	9037	7340	6500	5962	5576	5279	5041	4843	4675	4529	4288	4011	3797	3679	3441	3258	3110
		40000	9037	7340	5962	5279	4843	4529	4288	4094	3934	3797	3679	3483	3258	3084	2988	2795	2646	2526
		100000	6865	5576	4529	4011	3679	3441	3258	3110	2988	2884	2795	2646	2475	2343	2270	2123	2010	1919
LB6839	LB7875	8000	15995	12992	10553	9344	8572	8016	7590	7247	6962	6721	6511	6165	5766	5459	5289	4946	4683	4472
LB68M65		20000	12151	9869	8016	7098	6511	6090	5766	5505	5289	5105	4946	4683	4380	4147	4018	3758	3558	3397
		40000	9869	8016	6511	5766	5289	4946	4683	4472	4296	4147	4018	3804	3558	3368	3263	3052	2890	2759
		100000	7497	6090	4946	4380	4018	3758	3558	3397	3263	3150	3052	2890	2703	2559	2479	2319	2195	2096
LB6843	LB7880	8000	17922	14557	11824	10470	9604	8982	8504	8120	7801	7530	7296	6908	6460	6116	5926	5542	5247	5010
LB68M70		20000	13615	11059	8982	7954	7296	6824	6460	6168	5926	5720	5542	5247	4908	4646	4502	4210	3986	3806
		40000	11059	8982	7296	6460	5926	5542	5247	5010	4814	4646	4502	4262	3986	3774	3657	3420	3238	3091
		100000	8401	6824	5542	4908	4502	4210	3986	3806	3657	3530	3420	3238	3028	2867	2778	2598	2460	2348
LB6847	LB7885	8000	22547	18314	14876	13172	12083	11300	10699	10215	9814	9474	9179	8690	8127	7695	7455	6973	6602	6303
LB6848		20000	17128	13912	11300	10006	9179	8584	8127	7760	7455	7197	6973	6602	6174	5845	5664	5297	5015	4788
LB68M75		40000	13912	11300	9179	8127	7455	6973	6602	6303	6056	5845	5664	5362	5015	4748	4600	4302	4073	3889
		100000	10569	8584	6973	6174	5664	5297	5015	4788	4600	4441	4302	4073	3810	3607	3495	3268	3094	2955
LB6851	LB7890	8000	24667	20036	16274	14410	13219	12363	11705	11176	10737	10364	10042	9507	8892	8418	8156	7628	7222	6896
LB68M80		20000	18738	15220	12363	10947	10042	9391	8892	8490	8156	7873	7628	7222	6755	6395	6196	5795	5486	5238
		40000	15220	12363	10042	8892	8156	7628	7222	6896	6625	6395	6196	5866	5486	5194	5033	4707	4456	4255
		100000	11562	9391	7628	6755	6196	5795	5486	5238	5033	4858	4707	4456	4168	3946	3823	3576	3385	3232
LB6855	LB78100	8000	30834	25045	20343	18013	16523	15453	14631	13970	13421	12955	12552	11884	11115	10523	10196	9535	9028	8620
LB6856		20000	23423	19025	15453	13684	12552	11739	11115	10612	10196	9842	9535	9028	8443	7994	7745	7244		
LB68M90		40000	19025	15453	12552	11115	10196	9535	9028	8620	8281	7994	7745	7333	6858	6493	6291	5884		
		100000	14453	11739	9535	8443	7745	7244	6858	6548	6291	6073	5884	5570	5210	4932	4779	4470		
LB6859	LB78110	8000	39313	31932	25937	22966	21067	19703	18654	17811	17112	16518	16004	15152	14171	13417	12999	12158		
LB6863		20000	29864	24257	19703	17447	16004	14968	14171	13531	12999	12548	12158	11510	10765	10192	9875	9236		
LB6864		40000	24257	19703	16004	14171	12999	12158	11510	10990	10559	10192	9875	9349	8744	8279	8021	7502		
LB68M100		100000	18427	14968	12158	10765	9875	9236	8744	8349	8021	7743	7502	7102	6642	6289	6093	5699		
LB6867	LB78120	8000	46251	37567	30514	27019	24785	23180	21946	20955	20132	19433	18828	17826	16672	15784	15293			
LB68M110		20000	35135	28538	23180	20525	18828	17609	16672	15918	15293	14762	14303	13542	12665	11991	11618			
		40000	28538	23180	18828	16672	15293	14303	13542	12930	12422	11991	11618	10999	10287	9739	9436			
		100000	21679	17609	14303	12665	11618	10865	10287	9822	9436	9109	8825	8356	7815	7399	7168			
LB6871	LB78130	8000	55115	44768	36363	32198	29536	27623	26153	24971	23990	23157	22437	21243	19867	18810	18224			
LB6872		20000	41869	34008	27623	24459	22437	20984	19867	18969	18224	17592	17044	16137	15092	14289	13844			
LB68M115		40000	34008	27623	22437	19867	18224	17044	16137	15408	14803	14289	13844	13107	12259	11606	11245			
		100000	25834	20984	17044	15092	13844	12948	12259	11705	11245	10855	10517	9957	9312	8817	8542			
LB6879	LB78140	8000	63980	51968	42211	37377	34286	32066	30359	28987	27849	26882	26046	24659	23063	21835				
LB6880		20000	48603	39478	32066	28393	26046	24359	23063	22020	21156	20421	19786	18733	17520	16587				
LB68M125		40000	39478	32066	26046	23063	21156	19786	18733	17886	17184	16587	16071	15216	14230	13473				
		100000	29990	24359	19786	17520	16071	15030	14230	13587	13054	12601	12209	11559	10810	10235				
LB6883	LB78150	8000	73230	59481	48314	42780	39243	36702	34748	33178	31875	30769	29811	28225	26397	24992				
LB68M135		20000	55630	45186	36702	32498	29811	27881	26397	25204	24214	23374	22646	21441	20053	18985				
		40000	45186	36702	29811	26397	24214	22646	21441	20472	19668	18985	18395	17415	16288	15421				
		100000	34326	27881	22646	20053	18395	17204	16288	15552	14941	14422	13974	13230	12373	11715				
LB6887	LB78160	8000	83251	67621	54925	48635	44613	41724	39504	37718	36237	34979	33891	32087	30009					
LB68M140		20000	63242	51369	41724	36946	33891	31696	30009	28653	27528	26572	25745	24375	22797					
		40000	51369	41724	33891	30009	27528	25745	24375	23273	22360	21583	20912	19799	18517					
		100000	39023	31696	25745	22797	20912	19558	18517	17680	16986	16396	15886	15040	14066					
LB6895	LB78170	8000	96356	78265	63571	56290	51636	48292	45722	43655	41941	40485	39225	37138	34733					
LB6896		20000	73197	59455	48292	42761	39225	36686	34733	33163	31861	30755	29798	28212	26385					
LB68M150		40000	59455	48292	39225	34733	31861	29798	28212	26937	25879	24981	24203	22915	21431					
		100000	45165	36686	29798	26385	24203	22636	21431	20463	19659	18977	18386	17408	16280					
LB68103	LB78180	8000	98283	79830	64842	57416	52668	49258	46636	44529	42780	41295	40010	37880						
LB68104		20000	74661	60644	49258	43616	40010	37419	35427	33826	32498	31370	30394	28776						
LB68M160		40000	60644	49258	40010	35427	32498	30394	28776	27476	26397	25480	24687	23373						
		100000	46068	37419	30394	26913	24687	23089	21860	20872	20052	19356	18754	17756						
LB68111	LB78190	8000	104064	84526	68657	60793	55767	52156	49379	47148	45296	43724	42363	40109						
LB68112		20000	79053	64211	52156	46182	42363	39620	37511	35816	34410	33215	32182	30469						
LB68M170		40000	64211	52156	42363	37511	34410	32182	30469	29092	27949	26979	26140	24748						
		100000	48778	39620	32182	28496	26140	24447	23146	22100	21232	20495	19857	18800						
LB68115	LB78200	8000	115627	93918	76285	67548	61963	57951	54866	52387	50329	48582	47071	44565						
LB68M180		20000	87837	71346	57951	51313	47071	44023	41679	39796	38233	36906	35757	33854						
		40000	71346	57951	47071	41679	38233	35757	33854	32324	31055	29977	29044	27498						
		100000	54198	44023	35757	31662	29044	27163	25718	24555	23591	22772	22064	20889						
LB68120	LB78220	8000	140679	114267	92814	82183	75388	70507	66754	63737	61234	59108	57269	54221						
LB68127		20000	106868	86804	70507	62431	57269	53561	50710	48418	46517	44902	43505	41189						
LB68128		40000	86804	70507	57269	50710	46517	43505	41189	39328	37784	36472	35337	33456						
LB68M200		100000	65941	53561	43505	38522	35337	33049	31290	29876	28703	27706	26844	25415						
LB66135	LB76240	8000	100210	81396	66114	58542	53701	50224	47551	45402	43619	42104								
LB66136		20000	76125	61833	50224	44472	40794	38153	36122	34490	33135	31985								
LB66143		40000	61833	50224	40794	36122	33135	30990	29340	28014	26914	25980								
LB66144		100000	46972	38153	30990	27440	25172	23542	22289	21281	20446	19736								
LB66M220																				
LB66151	LB76280																			
LB66152																				
LB66159		8000	132971	108006	87728	77680	71257	66643	63096	60244	57879	55869								
LB66160		20000	101012	82047	66643	59010	54131	50626	47931	45765	43968	42442								
LB66167		40000	82047	66643	54131	47931	43968	41121	38932	37173	35713	34473								
LB66168		100000	62328	50626	41121	36411	33401	31238	29575	28239	27130	26188								
LB66M260																				

* Load exceeds 25% of the C rating, consult Rexnord Bearing Division

Table 4 • Series 6900, 7900, SAF22600, SAF22300 Load Ratings and Speed Limits

Basic Bearing Number				Bearing Size Number	Co Static Load Rating	C Basic Load Rating	Approximate Speed Limit RPM*		e	$\frac{Fa}{Fr} \le e$		$\frac{Fa}{Fr} > e$	
Adapter Mounted		Direct Shaft Mounted											
Shaft Diameter	Number	Bearing Seat mm	Number										
inches					pounds/newtons	pounds/newtons	Oil	Grease		X1	Y1	X2	Y2
1 7/16	LB6923	45	LB7945	22309LB	40000	35500	4800	3800	0.36	1.00	1.9	0.67	2.8
1 1/2	LB6924				178000	158000							
1 11/16	LB6927	50	LB7950	22310LB	48000	42500	4300	3400	0.36	1.00	1.9	0.67	2.8
					214000	189000							
1 15/16	LB6931	55	LB7955	22311LB	57000	50000	4000	3200	0.36	1.00	1.9	0.67	2.8
2	LB6932				254000	222000							
2 3/16	LB6935	65	LB7965	22313LB	80000	65500	3400	2600	0.34	1.00	2.0	0.67	3.0
					356000	291000							
2 7/16	LB6939	75	LB7975	22315LB	98000	83000	3000	2200	0.34	1.00	2.0	0.67	3.0
2 1/2	LB6940				436000	369000							
2 11/16	LB6943	80	LB7980	22316LB	112000	93000	2800	2000	0.34	1.00	2.0	0.67	3.0
					498000	414000							
2 15/16	LB6947	85	LB7985	22317LB	122000	102000	2600	1900	0.33	1.00	2.0	0.67	3.0
					543000	454000							
3 3/16	22618-303	90	22318	22318LB	140000	114000	2400	1800	0.33	1.00	2.0	0.67	3.0
					623000	507000							
3 7/16	22620-307	100	22320	22320LB	183000	146000	2200	1700	0.34	1.00	2.0	0.67	3.0
3 1/2	22620-308				814000	649000							
3 15/16	22622-315	110	22322	22322LB	236000	180000	2000	1600	0.33	1.00	2.1	0.67	3.1
4	22622-400				1050000	801000							
4 3/16	22624-403	120	22324	22324LB	260000	204000	1800	1400	0.33	1.00	2.1	0.67	3.1
					1160000	907000							
4 7/16	22626-407	130	22326	22326LB	305000	236000	1700	1300	0.33	1.00	2.1	0.67	3.1
					1360000	1050000							
4 15/16	22628-415	140	22328	22328LB	360000	275000	1500	1100	0.34	1.00	2.0	0.67	3.0
5	22628-500				1600000	1220000							
5 3/16	22630-503	150	22330	22330LB	405000	310000	1400	1000	0.33	1.00	2.0	0.67	3.0
					1800000	1380000							
5 7/16	22632-507	160	22332	22332LB	425000	325000	1300	950	0.37	1.00	1.8	0.67	2.7
					1890000	1450000							
5 15/16	22634-515	170	22334	22334LB	475000	360000	1300	950	0.37	1.00	1.8	0.67	2.7
					2110000	1600000							

If the load P is greater than .25C, consult Rexnord Bearing Division.

*Speed limits are based on the following:

1. Negligible seal torque (e.g., non-contact seals)
2. Proper operating internal clearance.
3. Adequate lubrication and maintenance (special lubricants and/or more frequent relubrication may be required).
4. Normal room temperature environment and no extraneous heat sources, such that bearing operating temperature does not exceed 100°C (212°F).
5. Equivalent radial load not greater than 7% of C.
6. Axial load, if any, not greater than 20% of radial load.

Table 5 • Radial Load Ratings in Pounds at Various RPM for Appropriate L_{10} Life Hours

Basic Unit Number		L_{10} Minimum Life, hours	Radial Load Ratings, Pounds																	
			Speed, RPM																	
Adapter Mounted	Direct Shaft Mounted		50	100	200	300	400	500	600	700	800	900	1000	1200	1500	1800	2000	2500	3000	3500
LB6923	LB7945	8000	13682	11114	9027	7993	7332	6857	6492	6199	5956	5749	5570	5274	4932	4670	4524	4231	4006	3825
LB6924		20000	10394	8443	6857	6072	5570	5209	4932	4709	4524	4367	4231	4006	3747	3547	3437	3214	3043	2906
		40000	8443	6857	5570	4932	4524	4231	4006	3825	3675	3547	3437	3254	3043	2881	2792	2611	2472	2360
		100000	6413	5209	4231	3747	3437	3214	3043	2906	2792	2695	2611	2472	2312	2189	2121	1983	1878	1793
LB6927	LB7950	8000	16380	13305	10807	9569	8778	8210	7773	7421	7130	6882	6668	6313	5905	5590	5416	5066	4796	4579
		20000	12444	10107	8210	7269	6668	6237	5905	5638	5416	5228	5066	4796	4485	4247	4115	3848	3643	3479
		40000	10107	8210	6668	5905	5416	5066	4796	4579	4399	4247	4115	3896	3643	3449	3342	3126	2959	2826
		100000	7678	6237	5066	4485	4115	3848	3643	3479	3342	3226	3126	2959	2768	2620	2539	2374	2248	2146
LB6931	LB7955	8000	19271	15653	12714	11258	10327	9658	9144	8731	8388	8097	7845	7428	6947	6577	6372	5960	5642	5387
LB6932		20000	14639	11891	9658	8552	7845	7337	6947	6633	6372	6151	5960	5642	5277	4996	4841	4527	4286	4093
		40000	11891	9658	7845	6947	6372	5960	5642	5387	5176	4996	4841	4583	4286	4058	3932	3677	3482	3324
		100000	9033	7337	5960	5277	4841	4527	4286	4093	3932	3795	3677	3482	3256	3083	2987	2793	2645	2525
LB6935	LB7965	8000	25245	20505	16656	14748	13529	12653	11979	11438	10989	10607	10277	9730	9100	8616	8348	7807	7391	7057
		20000	19178	15577	12653	11203	10277	9612	9100	8689	8348	8058	7807	7391	6913	6545	6341	5931	5615	5361
		40000	15577	12653	10277	9100	8348	7807	7391	7057	6780	6545	6341	6004	5615	5316	5151	4817	4561	4355
		100000	11833	9612	7807	6913	6341	5931	5615	5361	5151	4972	4817	4561	4265	4038	3913	3659	3465	3308
LB6939	LB7975	8000	31990	25984	21106	18688	17143	16033	15180	14494	13924	13441	13023	12330	11531	10918	10578	9893	9366	8943
LB6940		20000	24301	19739	16033	14197	13023	12180	11531	11010	10578	10211	9893	9366	8760	8294	8036	7515	7115	6794
		40000	19739	16033	13023	11531	10578	9893	9366	8943	8592	8294	8036	7608	7115	6736	6527	6104	5779	5518
		100000	14995	12180	9893	8760	8036	7515	7115	6794	6527	6300	6104	5779	5405	5117	4958	4637	4390	4192
LB6943	LB7980	8000	35844	29115	23648	20940	19208	17965	17008	16240	15602	15060	14592	13815	12921	12233	11852	11085	10495	10021
		20000	27229	22117	17965	15907	14592	13647	12921	12337	11852	11441	11085	10495	9815	9293	9004	8421	7972	7612
		40000	22117	17965	14592	12921	11852	11085	10495	10021	9627	9293	9004	8524	7972	7548	7313	6840	6476	6183
		100000	16801	13647	11085	9815	9004	8421	7972	7612	7313	7059	6840	6476	6056	5734	5556	5196	4919	4697
LB6947	LB7985	8000	39313	31932	25937	22966	21067	19703	18654	17811	17112	16518	16004	15152	14171	13417	12999	12158	11510	10990
		20000	29864	24257	19703	17447	16004	14968	14171	13531	12999	12548	12158	11510	10765	10192	9875	9236	8744	8349
		40000	24257	19703	16004	14171	12999	12158	11510	10990	10559	10192	9875	9349	8744	8279	8021	7502	7102	6781
		100000	18427	14968	12158	10765	9875	9236	8744	8349	8021	7743	7502	7102	6642	6289	6093	5699	5395	5152
22618	22318	8000	43938	35689	28988	25668	23546	22021	20849	19907	19125	18461	17887	16935	15838	14995	14529	13588	12865	12283
		20000	33378	27111	22021	19499	17887	16729	15838	15122	14529	14024	13588	12865	12032	11391	11037	10322	9773	9331
		40000	27111	22021	17887	15838	14529	13588	12865	12283	11801	11391	11037	10449	9773	9253	8965	8384	7938	7579
		100000	20595	16729	13588	12032	11037	10322	9773	9331	8965	8653	8384	7938	7424	7029	6810	6369	6030	5758
22620	22320	8000	56272	45707	37125	32873	30155	28203	26701	25495	24494	23643	22908	21688	20284	19204	18607	17402	16476	15731
		20000	42747	34722	28203	24973	22908	21424	20284	19367	18607	17961	17402	16476	15409	14589	14135	13220	12516	11950
		40000	34722	28203	22908	20284	18607	17402	16476	15731	15113	14589	14135	13382	12516	11850	11481	10738	10166	9707
		100000	26376	21424	17402	15409	14135	13220	12516	11950	11481	11082	10738	10166	9508	9002	8722	8157	7723	7374
22622	22322	8000	69376	56351	45771	40529	37178	34770	32920	31432	30198	29149	28242	26739	25008	23677	22940	21454	20313	19395
		20000	52702	42807	34770	30788	28242	26414	25008	23877	22940	22143	21454	20313	18997	17986	17426	16298	15431	14733
		40000	42807	34770	28242	25008	22940	21454	20313	19395	18633	17986	17426	16499	15431	14609	14155	13238	12534	11967
		100000	32519	26414	21454	18997	17426	16298	15431	14733	14155	13663	13238	12534	11722	11098	10753	10056	9521	9091
22624	22324	8000	78626	63864	51874	45933	42135	39406	37309	35623	34224	33036	32008	30304	28342	26833	25999	24315	23021	21980
		20000	59729	48515	39406	34893	32008	29935	28342	27061	25999	25096	24315	23021	21530	20384	19750	18471	17488	16698
		40000	48515	39406	32008	28342	25999	24315	23021	21980	21117	20384	19750	18699	17488	16557	16042	15003	14205	13563
		100000	36855	29935	24315	21530	19750	18471	17488	16698	16042	15485	15003	14205	13285	12578	12186	11397	10791	10303
22626	22326	8000	90960	73882	60011	53138	48744	45588	43161	41211	39592	38218	37029	35058	32788	31043	30077	28129	26632	25428
		20000	69098	56125	45588	40367	37029	34631	32788	31306	30077	29033	28129	26632	24908	23582	22848	21369	20231	19317
		40000	56125	45588	37029	32788	30077	28129	26632	25428	24430	23582	22848	21632	20231	19154	18558	17357	16433	15690
		100000	42636	34631	28129	24908	22848	21369	20231	19317	18558	17914	17357	16433	15369	14551	14098	13185	12483	11919
22628	22328	8000	105991	86092	69928	61919	56799	53121	50294	48021	46135	44534	43148	40851	38206	36173	35047	32778	31033	29631
		20000	80517	65400	53121	47037	43148	40354	38206	36480	35047	33830	32778	31033	29024	27479	26624	24900	23574	22509
		40000	65400	53121	43148	38206	35047	32778	31033	29631	28467	27479	26624	25207	23574	22320	21625	20225	19148	18283
		100000	49682	40354	32778	29024	26624	24900	23574	22509	21625	20874	20225	19148	17909	16955	16428	15364	14546	13889
22630	22330	8000	119481	97049	78828	69800	64028	59882	56695	54133	52007	50201	48640	46051	43069	40776	39508	36949	34983	33402
		20000	90765	73724	59882	53024	48640	45490	43069	41122	39508	38136	36949	34983	32717	30976	30012	28069	26575	25374
		40000	73724	59882	48640	43069	39508	36949	34983	33402	32090	30976	30012	28415	26575	25160	24378	22799	21585	20610
		100000	56005	45490	36949	32717	30012	28069	26575	25374	24378	23531	22799	21585	20188	19113	18519	17319	16398	15657
22632	22332	8000	125262	101745	82642	73177	67126	62780	59438	56752	54524	52631	50993	48279	45153	42749	41419	38737	36675	35018
		20000	95156	77291	62780	55589	50993	47691	45153	43112	41419	39981	38737	36675	34301	32475	31464	29427	27861	26602
		40000	77291	62780	50993	45153	41419	38737	36675	35018	33643	32475	31464	29790	27861	26378	25557	23902	22630	21607
		100000	58715	47691	38737	34301	31464	29427	27861	26602	25557	24670	23902	22630	21165	20038	19415	18157	17191	16414
22634	22334	8000	138752	112702	91542	81058	74355	69541	65839	62864	60395	58298	56485	53478	50015	47353	45880	42909	40625	38789
		20000	105404	85615	69541	61576	56485	52827	50015	47755	45880	44287	42909	40625	37995	35972	34853	32596	30861	29466
		40000	85615	69541	56485	50015	45880	42909	40625	38789	37266	35972	34853	32998	30861	29218	28309	26476	25067	23934
		100000	65038	52827	42909	37995	34853	32596	30861	29466	28309	27327	26476	25067	23444	22196	21505	20113	19042	18182

* Load exceeds 25% of the C rating, consult Rexnord Bearing Division

Table 6 • Series PLB23000K Load Ratings and Speed Limits

Basic Bearing Number		Co Static Load Rating		C Basic Load Rating		Approximate Speed Limit RPM		e	Fa/Fr ≤ e		Fa/Fr > e	
Adapter Mounted												
Shaft diameter (inches)	Number	pounds	newtons	pounds	newtons	Grease	Oil		X1	Y1	X2	Y2
7-15/15 8	23044K	445100	1980000	254000	1090000	950	1200	0.24	1.00	2.80	0.67	4.10
8-1/2 8-15/16 9	23048K	490000	2180000	260000	1160000	950	1100	0.25	1.00	2.70	0.67	4.10
9-7/16 9-1/2	23052K	580000	2580000	321500	1430000	800	950	0.25	1.00	2.70	0.67	4.10
9-15/16 10 10-7/16	23056K	670000	2980000	345000	1530000	800	950	0.25	1.00	2.70	0.67	4.10
10-15/16 11	23060K	832000	3700000	431600	1920000	670	850	0.24	1.00	2.80	0.67	4.20
11-15/16 12	23064K	865500	3850000	440600	1960000	630	800	0.24	1.00	2.80	0.67	4.20
12-1/2	23068K	989200	4400000	512600	2280000	560	710	0.24	1.00	2.80	0.67	4.20
12-15/16 13	23072K	1056600	4700000	537500	2390000	530	670	0.24	1.00	2.80	0.67	4.20
13-15/16 14	23076K	1146500	5100000	562000	2500000	530	630	0.22	1.00	3.00	0.67	4.50
15	23080K	1326500	5900000	668000	2970000	480	600	0.23	1.00	3.00	0.67	4.40
15-3/4	23084K	1315200	5850000	654200	2910000	450	560	0.23	1.00	2.90	0.67	4.30
16-1/2	23088K	1427500	6350000	708200	3150000	430	530	0.23	1.00	2.90	0.67	4.30
17	23092K	1596200	7100000	775600	3450000	400	500	0.22	1.00	3.10	0.67	4.60
18	23096K	1787200	7950000	854300	3800000	400	480	0.22	1.00	3.10	0.67	4.60
19-1/2	230530K	2068200	9200000	989200	4400000	340	430	0.22	1.00	3.10	0.67	4.60
21	230560K	2405500	10700000	1124000	5000000	320	400	0.22	1.00	3.00	0.67	4.50
22	230600K	2743000	12200000	1225200	5450000	300	360	0.21	1.00	3.30	0.67	4.80
24	230630K	2855000	12700000	1326400	5900000	280	340	0.22	1.00	3.10	0.67	4.70

Table 7 • Radial Load Ratings in Pounds at Various RPM for Appropriate L_{10} Life Hours

Basic Unit Number	L_{10} Minimum Life (hours)	Radial Load Ratings, Pounds											
		Speed, RPM											
		50	100	200	300	400	500	600	700	800	900	1000	1200
23044	8000	*	*	*	57191	52462	49065	46453	44354	42612	41133	39853	37732
	20000	*	60406	49065	43445	39853	37272	35289	33694	32371	31247	30275	28663
	40000	60406	49065	39853	35289	32371	30275	28663	27368	26293	25380	24591	23282
	100000	45888	37272	30275	26807	24591	22998	21774	20790	19974	19280	18680	17686
23048	8000	*	*	*	58542	53701	50224	47551	45402	43619	42104	40794	
	20000	*	61833	50224	44472	40794	38153	36122	34490	33135	31985	30990	
	40000	61833	50224	40794	36122	33135	30990	29340	28014	26914	25980	25172	
	100000	46972	38153	30990	27440	25172	23542	22289	21281	20446	19736	19122	
23052	8000	*	*	*	72389	66403	62104	58798	56141	53936	52064		
	20000	*	76459	62104	54991	50444	47178	44666	42648	40973	39551		
	40000	76459	62104	50444	44666	40973	38320	36280	34641	33281	32125		
	100000	58082	47178	38320	33931	31126	29110	27561	26315	25282	24404		
23056	8000	*	*	*	77680	71257	66643	63096	60244	57879	55869		
	20000	*	82047	66643	59010	54131	50626	47931	45765	43968	42442		
	40000	82047	66643	54131	47931	43968	41121	38932	37173	35713	34473		
	100000	62328	50626	41121	36411	33401	31238	29575	28239	27130	26188		
23060	8000	*	*	*	97179	89144	83372	78934	75367	72407			
	20000	*	102642	83372	73823	67719	63334	59963	57253	55005			
	40000	102642	83372	67719	59963	55005	51443	48705	46504	44678			
	100000	77973	63334	51443	45551	41785	39079	36999	35327	33940			
23064	8000	*	*	*	99205	91003	85110	80580	76938	73917			
	20000	*	104783	85110	75362	69131	64655	61213	58447	56152			
	40000	104783	85110	69131	61213	56152	52516	49721	47474	45609			
	100000	79599	64655	52516	46501	42656	39894	37771	36064	34648			
23068	8000	*	*	*	115417	105874	99018	93748	89511				
	20000	*	121906	99018	87677	80428	75220	71216	67998				
	40000	121906	99018	80428	71216	65328	61098	57846	55231				
	100000	92607	75220	61098	54100	49627	46413	43943	41957				
23072	8000	*	*	*	121024	111017	103828	98302					
	20000	*	127827	103828	91936	84335	78874	74676					
	40000	127827	103828	84335	74676	68501	64065	60655					
	100000	97105	78874	64065	56728	52037	48668	46077					
23076	8000	*	*	*	126540	116077	108561	102782					
	20000	*	133654	108561	96127	88179	82469	78079					
	40000	133654	108561	88179	78079	71623	66986	63420					
	100000	101531	82469	66986	59314	54409	50886	48178					
23080	8000	*	*	*	150407	137970	129037	122168					
	20000	*	158863	129037	114258	104810	98024	92806					
	40000	158863	129037	104810	92806	85132	79620	75382					
	100000	120681	98024	79620	70501	64672	60484	57265					
23084	8000	*	*	*	147300	135120	126371						
	20000	*	155581	126371	111897	102645	95999						
	40000	155581	126371	102645	90889	83374	77975						
	100000	118188	95999	77975	69044	63335	59234						
23088	8000	*	*	*	159458	146273	136802						
	20000	*	168423	136802	121134	111118	103923						
	40000	168423	136802	111118	98391	90256	84411						
	100000	127944	103923	84411	74744	68563	64124						
23092	8000	*	*	*	174634	160194	149822						
	20000	*	184452	149822	132662	121693	113813						
	40000	184452	149822	121693	107755	98845	92445						
	100000	140120	113813	92445	81857	75089	70227						
23096	8000	*	*	*	192354	176449							
	20000	*	203168	165024	146123	134041							
	40000	203168	165024	134041	118689	108875							
	100000	154338	125362	101825	90163	82708							
230530	8000	*	*	*	222728	204312							
	20000	*	235250	191082	169197	155207							
	40000	235250	191082	155207	137431	126067							
	100000	178710	145157	117904	104400	95768							
230560	8000	*	*	*	253080	232154							
	20000	*	267308	217122	192254	176358							
	40000	267308	217122	176358	156159	143247							
	100000	203063	164938	133971	118627	108819							
230600	8000	*	*	*	275866								
	20000	*	291375	236670	209564								
	40000	291375	236670	192236	170219								
	100000	221345	179788	146034	129308								
230630	8000	*	*	*	298652								
	20000	*	315442	256219	226873								
	40000	315442	256219	208114	184279								
	100000	239628	194639	158096	139989								

Table 8 • Series PLB23100K and PLB23100 Load Ratings and Speed Limits

Basic Bearing Number				Co Static Load Rating		C Basic Load Rating		Approximate Speed Limit RPM		e	Fa/Fr ≤ e		Fa/Fr > e	
Adapter Mounted		Direct Shaft Mounted												
Shaft Diameter (inches)	Number	Bearing Seat (mm)	Number	pounds	newtons	pounds	newtons	Grease	Oil		X1	Y1	X2	Y2
8	23144K	NA	NA	609200	2710000	353000	1570000	710	950	0.30	1.00	2.20	0.67	3.30
8-15/16	23148K	NA	NA	697000	3100000	402500	1790000	670	850	0.30	1.00	2.20	0.67	3.30
9-7/16	23152K	260	23152	843000	3750000	485500	2160000	600	800	0.32	1.00	2.10	0.67	3.20
10-7/16	23156K	280	23156	899300	4000000	501500	2230000	560	750	0.30	1.00	2.20	0.67	3.30
10-15/16	23160K	300	23160	1079000	4800000	600500	2670000	500	670	0.31	1.00	2.20	0.67	3.30
11-15/16	23164K	320	23164	1236500	5500000	685700	3050000	480	600	0.31	1.00	2.10	0.67	3.20
12-7/16	23168K	340	23168	1483800	6600000	809500	3600000	430	560	0.31	1.00	2.10	0.67	3.20
13-7/16	23172K	360	23172	1596200	7100000	854500	3800000	400	530	0.31	1.00	2.20	0.67	3.20
13-15/16	23176K	380	23176	1708500	7600000	899200	4000000	400	500	0.30	1.00	2.20	0.67	3.30
15	23180K	400	23180	1776000	7900000	933000	4150000	380	480	0.29	1.00	2.30	0.67	3.40
15-3/4	23184K	420	23184	2113200	9400000	1124000	5000000	340	450	0.31	1.00	2.20	0.67	3.30
16-1/2	23188K	440	23188	2315500	10300000	1191500	5300000	320	430	0.30	1.00	2.20	0.67	3.30
17	23192K	460	23192	2450500	10900000	1281400	5700000	300	400	0.31	1.00	2.20	0.67	3.30
18	23196K	NA	NA	2630500	11700000	1360100	6050000	300	380	0.31	1.00	2.20	0.67	3.30
19-1/2	231530K	NA	NA	3169800	14100000	1607400	7150000	260	340	0.30	1.00	2.20	0.67	3.30
21	231560K	NA	NA	3484500	15500000	1764800	7850000	240	320	0.30	1.00	2.20	0.67	3.40

Table 9 • Radial Load Ratings in Pounds at Various RPM for Appropriate L_{10} Life Hours

Basic Unit Number	L_{10} Minimum Life (hours)	Radial Load Ratings, Pounds									
		Speed, RPM									
		50	100	200	300	400	500	600	700	800	900
23144	8000	*	*	*	79481	72910	68189	64559	61641	59221	57165
	20000	*	83950	68189	60379	55386	51800	49043	46826	44988	43426
	40000	83950	68189	55386	49043	44988	42075	39835	38035	36541	35273
	100000	63773	51800	42075	37256	34175	31962	30261	28893	27759	26795
23148	8000	*	*	*	90627	83133	77750	73612	70285	67525	
	20000	*	95722	77750	68845	63153	59064	55920	53393	51296	
	40000	95722	77750	63153	55920	51296	47975	45421	43368	41665	
	100000	72716	59064	47975	42480	38967	36444	34504	32945	31651	
23152	8000	*	*	*	109315	100276	93783	88792	84779	81450	
	20000	*	115461	93783	83042	76176	71243	67451	64403	61874	
	40000	115461	93783	76176	67451	61874	57868	54787	52311	50257	
	100000	87711	71243	57868	51240	47003	43960	41620	39739	38178	
23156	8000	*	*	*	112918	103581	96874	91718	87573		
	20000	*	119266	96874	85779	78686	73591	69674	66525		
	40000	119266	96874	78686	69674	63913	59775	56593	54035		
	100000	90601	73591	59775	52928	48552	45408	42991	41048		
23160	8000	*	*	*	135209	124029	115998	109823			
	20000	*	142810	115998	102712	94219	88119	83428			
	40000	142810	115998	94219	83428	76530	71575	67765			
	100000	108487	88119	71575	63377	58137	54372	51478			
23164	8000	*	*	*	154392	141626	132456	125405			
	20000	*	163072	132456	117285	107587	100621	95265			
	40000	163072	132456	107587	95265	87388	81730	77379			
	100000	123879	100621	81730	72369	66385	62087	58782			
23168	8000	*	*	*	182267	167196	156370				
	20000	*	192514	156370	138461	127012	118788				
	40000	192514	156370	127012	112465	103166	96486				
	100000	146245	118788	96486	85435	78371	73296				
23172	8000	*	*	*	192399	176491	165063				
	20000	*	203216	165063	146158	134072	125391				
	40000	203216	165063	134072	118717	108901	101849				
	100000	154375	125391	101849	90184	82727	77371				
23176	8000	*	*	*	202464	185723	173697				
	20000	*	213846	173697	153803	141086	131950				
	40000	213846	173697	141086	124927	114597	107177				
	100000	162450	131950	107177	94902	87055	81418				
23180	8000	*	*	*	210074	192704					
	20000	*	221885	180226	159585	146389					
	40000	221885	180226	146389	129623	118905					
	100000	168556	136910	111206	98469	90327					
23184	8000	*	*	*	253080	232154					
	20000	*	267308	217122	192254	176358					
	40000	267308	217122	176358	156159	143247					
	100000	203063	164938	133971	118627	108819					
23188	8000	*	*	*	268278	246096					
	20000	*	283361	230160	203800	186948					
	40000	283361	230160	186948	165537	151849					
	100000	215257	174843	142017	125751	115353					
23192	8000	*	*	*	288520	264664					
	20000	*	304741	247526	219176	201054					
	40000	304741	247526	201054	178027	163306					
	100000	231499	188035	152732	135239	124057					
23196	8000	*	*	*	306240						
	20000	*	323457	262729	232638						
	40000	323457	262729	213402	188961						
	100000	245717	199584	162112	143545						
231530	8000	*	*	*	361922						
	20000	*	382269	310499	274937						
	40000	382269	310499	252204	223318						
	100000	290394	235873	191589	169645						
231560	8000	*	*	*	397362						
	20000	*	419702	340904	301859						
	40000	419702	340904	276900	245186						

Table 10 • Series PLB23200K and PLB23200 Load Ratings and Speed Limits

Basic Bearing Number				Co Static Load Rating		C Basic Load Rating		Approximate Speed Limit RPM		e	Fa/Fr ≤ e		Fa/Fr > e	
Adapter Mounted		Direct Shaft Mounted												
Shaft Diameter (inches)	Number	Bearing Seat (mm)	Number	pounds	newtons	pounds	newtons	Grease	Oil		X1	Y1	X2	Y2
8	23244K	NA	NA	764500	3400000	454000	2020000	670	900	0.35	1.00	1.90	0.67	2.90
8-15/16	23248K	240	23248	910500	4050000	548500	2440000	630	800	0.37	1.00	4.80	0.67	2.70
9-7/16	23252K	260	23252	1022900	4550000	616000	2740000	560	750	0.37	1.00	1.80	0.67	2.70
10-7/16	23256K	280	23256	1101600	4900000	647500	2880000	530	670	0.35	1.00	1.90	0.67	2.90
10-15/16	23260K	300	23260	1326400	5900000	764500	3400000	480	630	0.35	1.00	1.90	0.67	2.90
11-15/16	23264K	320	23264	1551200	6900000	877000	3900000	450	600	0.36	1.00	1.90	0.67	2.80
12-7/16	23268K	340	23268	1753500	7800000	989200	4400000	400	530	0.36	1.00	1.90	0.67	2.80
13-7/16	23272K	360	23272	1922100	8550000	1079000	4800000	380	500	0.36	1.00	1.90	0.67	2.80
13-15/16	23276K	380	23276	2068500	9200000	1157800	5150000	360	480	0.35	1.00	1.90	0.67	2.90
15	23280K	400	23280	2338000	10400000	1303900	5800000	340	450	0.36	1.00	1.90	0.67	2.80
15-3/4	23284K	420	23284	2630500	11700000	1450000	6450000	320	430	0.35	1.00	1.90	0.67	2.90
16-1/2	23288K	440	23288	2877500	12800000	1551200	6900000	300	400	0.35	1.00	1.90	0.67	2.90
17	23292K	460	23292	3080000	13700000	1652400	7350000	280	380	0.36	1.00	1.90	0.67	2.80
18	23296K	NA	NA	3237500	14400000	1764800	7850000	260	360	0.36	1.00	1.90	0.67	2.80

Table 11 • Radial Load Ratings in Pounds at Various RPM for Appropriate L_{10} Life Hours

Basic Unit Number	L_{10} Minimum Life (hours)	Radial Load Ratings, Pounds									
		Speed, RPM									
		50	100	200	300	400	500	600	700	800	900
23244	8000	*	*	*	102223	93770	87699	83031	79278	76165	73521
	20000	*	107970	87699	77654	71233	66621	63075	60224	57859	55851
	40000	107970	87699	71233	63075	57859	54113	51233	48917	46996	45365
	100000	82020	66621	54113	47915	43953	41107	38919	37160	35701	34462
23248	8000	*	*	*	123500	113289	105953	100313	95780	92019	
	20000	*	130443	105953	93818	86061	80488	76204	72760	69903	
	40000	130443	105953	86061	76204	69903	65377	61897	59100	56779	
	100000	99092	80488	65377	57889	53102	49664	47020	44895	43132	
23252	8000	*	*	*	138699	127230	118992	112658	107567		
	20000	*	146496	118992	105363	96651	90393	85582	81714		
	40000	146496	118992	96651	85582	78505	73422	69514	66372		
	100000	111287	90393	73422	65013	59637	55776	52807	50420		
23256	8000	*	*	*	145791	133736	125077	118419			
	20000	*	153987	125077	110751	101594	95015	89958			
	40000	153987	125077	101594	89958	82520	77177	73069			
	100000	116978	95015	77177	68337	62687	58628	55507			
23260	8000	*	*	*	172135	157902	147677	139817			
	20000	*	181812	147677	130764	119951	112184	106213			
	40000	181812	147677	119951	106213	97431	91122	86272			
	100000	138115	112184	91122	80686	74014	69222	65537			
23264	8000	*	*	*	197465	181138	169409	160392			
	20000	*	208567	169409	150006	137603	128693	121843			
	40000	208567	169409	137603	121843	111768	104531	98967			
	100000	158439	128693	104531	92559	84906	79408	75181			
23268	8000	*	*	*	222728	204312	191082				
	20000	*	235250	191082	169197	155207	145157				
	40000	235250	191082	155207	137431	126067	117904				
	100000	178710	145157	117904	104400	95768	89567				
23272	8000	*	*	*	242948	222859	208429				
	20000	*	256606	208429	184557	169297	158335				
	40000	256606	208429	169297	149907	137512	128608				
	100000	194933	158335	128608	113878	104462	97698				
23276	8000	*	*	*	260690	239135					
	20000	*	275346	223651	198035	181661					
	40000	275346	223651	181661	160855	147554					
	100000	209169	169898	138000	122195	112091					
23280	8000	*	*	*	293586	269311					
	20000	*	310092	251873	223025	204584					
	40000	310092	251873	204584	181153	166174					
	100000	235563	191337	155414	137614	126235					
23284	8000	*	*	*	326482	299487					
	20000	*	344837	280095	248015	227507					
	40000	344837	280095	227507	201450	184793					
	100000	261958	212776	172828	153033	140380					
23288	8000	*	*	*	349268	320389					
	20000	*	368904	299643	265324	243386					
	40000	368904	299643	243386	215510	197691					
	100000	280241	227626	184890	163714	150177					
23292	8000	*	*	*	372054						
	20000	*	392971	319192	282634						
	40000	392971	319192	259264	229570						
	100000	298524	242477	196952	174395						
23296	8000	*	*	*	397362						
	20000	*	419702	340904	301859						
	40000	419702	340904	276900	245186						
	100000	318830	258970	210349	186257						

PLB6800, PLB6800F, PLB6600F

Interchange: *USAF 500, SAF22500*

Photo Shows a 2-Bolt Spherical Roller Bearing Two-Piece Pillow Block Unit

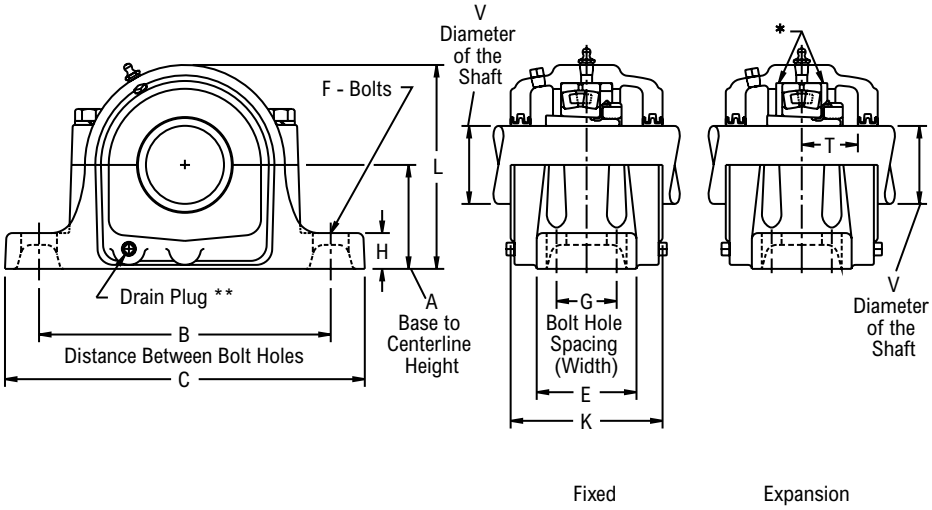

Product Features

- Corrosion-resistant powder coating
- Two piece cast iron housing
- Broad range of sealing options
- Fixed or Expansion - up to 3/8 in expansion
- Matched base & cap
- Large reservoir for grease or oil storage
- Tapered adapter mounted
- See Features and Benefits for additional info on pages 206 - 207.

Bearing Dimensions

Size Code	V Shaft Diameter	Part Number	A Base to Centerline Height	B Min. Distance Between Bolt Holes	B Max. Distance Between Bolt Holes	G Bolt Hole Spacing (Width)	C	E	F Bolts	H	K	L	P	T	Approx. Weight
Two-Bolt Pillow Block															
22209	1 7/16	PLB6823R	2 1/4	6 1/4	7	-	8 1/4	2 3/8	1/2	13/16	3 5/8	4 3/8	6 1/4	1 1/16	11.00
	1 1/2	PLB6824R*													
	40.00	*PLB68M40R*	*57.15*	*158.80*	*177.80*	*-*	*209.60*	*60.30*	*12.00*	*20.60*	*92.10*	*111.10*	*158.80*	*27.00*	*5.00*
22210	1 11/16	PLB6827R	2 1/2	6 1/2	7	-	8 1/4	2 3/8	1/2	15/16	3 5/8	4 3/4	6 5/8	1 1/8	12.00
	1 3/4	PLB6828R*													
	45.00	*PLB68M45R*	*63.50*	*165.10*	*177.80*	*-*	*209.60*	*60.30*	*12.00*	*23.80*	*92.10*	*120.60*	*168.30*	*28.60*	*5.40*
22211	1 15/16	PLB6831R	2 3/4	7 3/8	7 7/8	-	9 5/8	2 3/4	5/8	15/16	3 7/8	5 1/4	7 1/4	1 3/16	14.00
	2	PLB6832R													
	50.00	*PLB68M50R*	*69.85*	*187.30*	*200.00*	*-*	*244.50*	*69.80*	*16.00*	*23.80*	*98.40*	*133.40*	*184.20*	*30.20*	*6.40*
22213	2 3/16	PLB6835R	3	8 1/8	9 1/2	-	11	3 1/4	5/8	1	4 3/8	5 15/16	8 1/4	1 13/32	22.00
	60.00	*PLB68M60R**	*76.20*	*206.40*	*241.30*	*-*	*279.40*	*82.60*	*16.00*	*25.40*	*111.10*	*150.80*	*209.60*	*35.70*	*10.00*
22215	2 7/16	PLB6839R	3 1/4	8 5/8	9 5/8	-	11 1/4	3 1/8	5/8	1 1/8	4 3/4	6 3/8	8 3/8	1 15/32	27.00
	65.00	*PLB68M65R*	*82.55*	*219.10*	*244.50*	*-*	*285.80*	*79.40*	*16.00*	*28.60*	*120.60*	*161.90*	*212.70*	*37.30*	*12.20*
22216	2 11/16	PLB6843R	3 1/2	9 5/8	11	-	13	3 1/2	3/4	1 1/4	5 1/4	7	9 1/2	1 1/2	38.00
	70.00	*PLB68M70R*	*88.90*	*244.50*	*279.40*	*-*	*330.20*	*88.90*	*20.00*	*31.80*	*133.40*	*177.80*	*241.30*	*38.10*	*17.20*
22217	2 15/16	PLB6847R	3 3/4	9 7/8	11	-	13	3 1/2	3/4	1 1/4	5	7 5/16	10	1 19/32	42.00
	3	PLB6848R													
	75.00	*PLB68M75R*	*95.25*	*250.80*	*279.40*	*-*	*330.20*	*88.90*	*20.00*	*31.80*	*127.00*	*185.70*	*254.00*	*40.50*	*19.00*
22218	3 3/16	PLB6851R	4	10 1/4	11 3/4	-	13 3/4	3 7/8	3/4	1 5/16	5 7/8	7 15/16	10 1/2	1 3/4	47.00
	80.00	*PLB68M80R*	*101.60*	*260.40*	*298.40*	*-*	*349.20*	*98.40*	*20.00*	*33.30*	*149.20*	*201.60*	*266.70*	*44.40*	*21.30*
22220	3 7/16	PLB6855R	4 1/2	11 5/8	13 1/8	-	15 1/4	4 3/8	7/8	1 1/2	6	8 7/8	11 3/4	1 29/32	71.00
	3 1/2	PLB6856R													
	90.00	*PLB68M90R*	*114.30*	*295.30*	*333.40*	*-*	*387.40*	*111.10*	*24.00*	*38.10*	*152.40*	*225.40*	*298.40*	*48.40*	*30.80*
Four-Bolt Pillow Block															
22215	2 7/16	PLB6839FR	3 1/4	8 5/8	9 5/8	1 7/8	11 1/4	3 1/8	1/2	1 1/8	4 3/4	6 3/8	8 3/8	1 15/32	27.00
	65.00	*PLB68M65FR*	*82.55*	*219.10*	*244.50*	*47.60*	*285.80*	*79.40*	*12.00*	*28.60*	*120.60*	*161.90*	*212.70*	*37.30*	*12.20*
22216	2 11/16	PLB6843FR	3 1/2	9 5/8	11	2	13	3 1/2	5/8	1 1/4	5 1/4	7	9 1/2	1 1/2	38.00
	70.00	*PLB68M70FR*	*88.90*	*244.50*	*279.40*	*50.80*	*330.20*	*88.90*	*16.00*	*31.80*	*133.40*	*177.80*	*241.30*	*38.10*	*17.20*
22217	2 15/16	PLB6847FR	3 3/4	9 7/8	11	2	13	3 1/2	5/8	1 1/4	5	7 5/16	10	1 19/32	42.00
	3	PLB6848FR													
	75.00	*PLB68M75FR*	*95.25*	*250.80*	*279.40*	*50.80*	*330.20*	*88.90*	*16.00*	*31.80*	*127.00*	*185.70*	*254.00*	*40.50*	*19.00*
22218	3 3/16	PLB6851FR	4	10 3/8	11 5/8	2 1/8	13 3/4	3 7/8	5/8	1 5/16	5 7/8	7 15/16	10 1/2	1 3/4	47.00
	80.00	*PLB68M80FR*	*101.60*	*263.50*	*295.30*	*54.00*	*349.20*	*98.40*	*16.00*	*33.30*	*149.20*	*201.60*	*266.70*	*44.40*	*21.30*
22220	3 7/16	PLB6855FR	4 1/2	11 5/8	13 1/8	2 3/8	15 1/4	4 1/2	3/4	1 1/2	6	8 7/8	11 3/4	1 29/32	71.00
	3 1/2	PLB6856FR													

Continued...

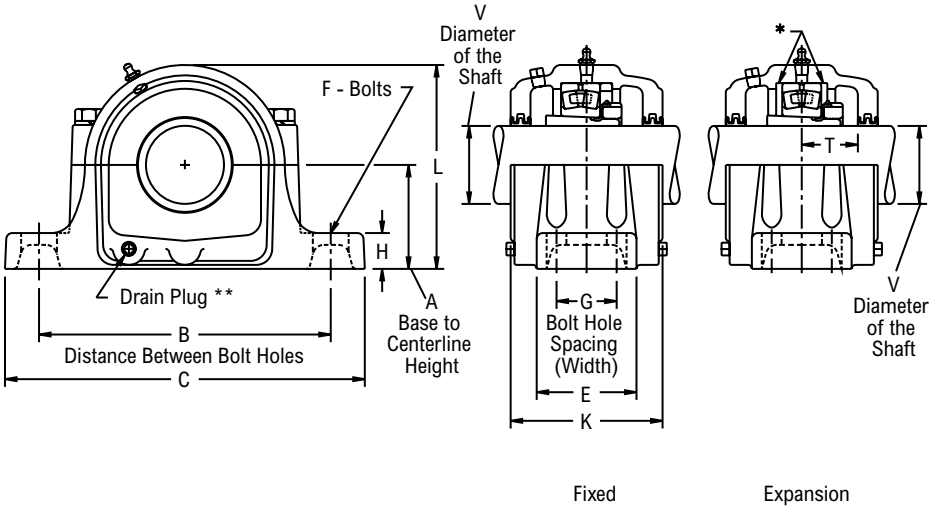

Continued...

Bearing Dimensions

Size Code	V Shaft Diameter	Part Number	A Base to Centerline Height	B Min. Distance Between Bolt Holes	B Max. Distance Between Bolt Holes	G Bolt Hole Spacing (Width)	C	E	F Bolts	H	K	L	P	T	Approx. Weight
Four-Bolt Pillow Block (continued)															
22220	*90.00*	*PLB68M90FR*	*114.30*	*295.30*	*333.40*	*60.30*	*387.40*	*114.30*	*20.00*	*38.10*	*152.40*	*225.40*	*298.40*	*48.40*	*30.80*
22222	3 11/16	PLB6859FR	4 15/16	12 5/8	14 1/2	2 3/4	16 1/2	4 3/4	3/4	2	6 1/2	9 5/8	12 1/4	2 1/8	87.00
	3 15/16	PLB6863FR													
	4	PLB6864FR													
	100.00	*PLB68M100FR*	*125.41*	*320.70*	*368.30*	*69.80*	*419.10*	*120.60*	*20.00*	*50.80*	*165.10*	*244.50*	*311.20*	*54.00*	*39.50*
22224	4 3/16	PLB6867FR	5 1/4	13 1/4	14 1/2	2 3/4	16 1/2	4 3/4	3/4	1 3/4	7 1/8	10 7/16	13 1/2	2 9/32	104.00
	110.00	*PLB68M110FR*	*133.35*	*336.60*	*368.30*	*69.80*	*419.10*	*120.60*	*20.00*	*44.40*	*181.00*	*265.10*	*342.90*	*57.90*	*47.20*
22226	4 7/16	PLB6871FR	6	14 5/8	16	3 1/4	18 3/8	5 1/8	7/8	2 3/8	7 3/4	11 11/32	14 1/2	2 15/32	149.00
	4 1/2	PLB6872FR													
	115.00	*PLB68M115FR*	*152.40*	*371.50*	*406.40*	*82.60*	*466.70*	*130.20*	*24.00*	*60.33*	*196.80*	*288.10*	*368.30*	*62.70*	*63.50*
22228	4 15/16	PLB6879FR	6	16	17 1/8	3 3/8	20 1/8	5 7/8	1	2 3/8	7 3/4	11 13/16	15 1/2	2 5/8	167.00
	5	PLB6880FR													
	125.00	*PLB68M125FR*	*152.40*	*406.40*	*435.00*	*85.70*	*511.20*	*149.20*	*24.00*	*60.33*	*196.80*	*300.00*	*393.70*	*66.70*	*71.20*
22230	5 3/16	PLB6883FR	6 5/16	17	18 1/4	3 3/4	21 1/4	6 1/4	1	2	8 1/8	12 9/16	16	2 3/4	187.00
	135.00	*PLB68M135FR*	*160.34*	*431.80*	*463.60*	*95.20*	*539.80*	*158.80*	*24.00*	*50.80*	*206.40*	*319.10*	*406.40*	*69.80*	*84.80*
22232	5 7/16	PLB6887FR	6 11/16	17 3/8	19 1/4	3 3/4	22	6 1/4	1	2 5/8	8 1/2	13 3/8	17	2 31/32	221.00
	140.00	*PLB68M140FR*	*169.86*	*441.30*	*489.00*	*95.20*	*558.80*	*158.80*	*24.00*	*66.68*	*215.90*	*339.70*	*431.80*	*75.40*	*94.80*
22234	5 15/16	PLB6895FR	7 1/16	19 3/8	21 5/8	4 1/4	24 3/4	6 3/4	1	2 3/4	9 1/4	14 1/4	18	3 1/8	280.00
	6	PLB6896FR													
	150.00	*PLB68M150FR*	*179.39*	*492.10*	*549.30*	*108.00*	*628.60*	*171.40*	*24.00*	*69.85*	*235.00*	*362.00*	*457.20*	*79.40*	*119.80*
22236	6 7/16	PLB68103FR	7 1/2	20 7/8	23 5/8	4 5/8	26 3/4	7 1/8	1	3	9 7/8	14 15/16	18 3/4	3 5/32	304.00
	6 1/2	PLB68104FR													
	160.00	*PLB68M160FR*	*190.50*	*530.20*	*600.10*	*117.50*	*679.40*	*181.00*	*24.00*	*76.20*	*250.83*	*379.40*	*476.20*	*80.20*	*137.90*
22238	6 15/16	PLB68111FR	7 7/8	21 5/8	24 3/8	4 1/2	28	7 1/2	1 1/4	3 1/8	10 5/8	15 13/16	20 1/2	3 5/16	370.00
	7	PLB68112FR													
	170.00	*PLB68M170FR*	*200.02*	*549.30*	*619.10*	*114.30*	*711.20*	*190.50*	*30.00*	*79.38*	*269.88*	*401.60*	*520.70*	*84.10*	*167.80*
22240	7 3/16	PLB68115FR	8 1/4	22 1/2	25	5	29 1/2	8	1 1/4	2 3/8	11	16 3/4	22 1/4	3 17/32	450.00
	180.00	*PLB68M180FR*	*209.55*	*571.50*	*635.00*	*127.00*	*749.30*	*203.20*	*30.00*	*60.30*	*279.40*	*425.40*	*565.20*	*89.70*	*204.10*
22244	7 1/2	PLB68120FR	9 1/2	24 3/4	27 7/8	5 1/4	32 3/4	8 3/4	1 1/2	3 3/4	11 3/16	18 9/16	24 1/2	3 13/16	675.00
	7 15/16	PLB22544K71516									11 7/8	18 5/8	-	-	665.00
		PLB68127FR									11 3/16	18 9/16	24 1/2	3 13/16	
	8	PLB22544K8									11 7/8	18 5/8	-	-	
		PLB68128FR									11 3/16	18 9/16	24 1/2	3 13/16	
	200.00	*PLB68M200FR*	*241.30*	*628.60*	*708.00*	*133.40*	*831.80*	*222.20*	*36.00*	*95.25*	*284.20*	*471.50*	*622.30*	*96.80*	*301.60*

Continued...

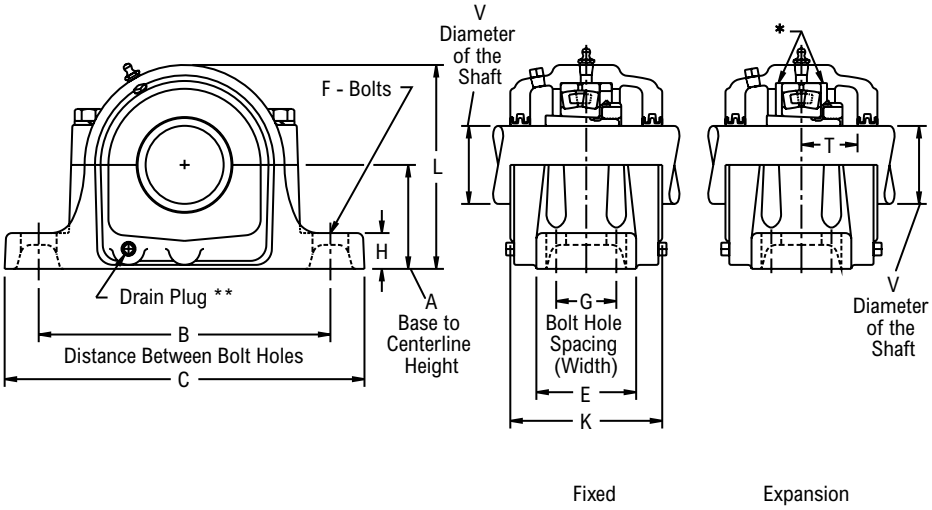

Continued...

Bearing Dimensions

Size Code	V Shaft Diameter	Part Number	A Base to Centerline Height	B Min. Distance Between Bolt Holes	B Max. Distance Between Bolt Holes	G Bolt Hole Spacing (Width)	C	E	F Bolts	H	K	L	P	T	Approx. Weight
Four-Bolt Pillow Block (continued)															
22248	8 7/16	PLB22548K8716	10 1/4	29	30 1/2	8 3/4	35	14 1/2	1 5/8	3 3/4	14 1/8	20 1/2	-	-	1,000.00
	8 15/16	PLB22548K81516													
23048	8 7/16	PLB66135FR	8 1/4	22 1/2	25	5	29 1/2	8	1 1/4	2 3/8	11	16 3/4	22 1/4	3 13/16	430.00
	8 1/2	PLB66136FR													
	9	PLB66144FR													
	220.00	*PLB66M220FR*	*209.55*	*571.50*	*635.00*	*127.00*	*749.30*	*203.20*	*30.00*	*60.30*	*279.40*	*425.40*	*565.20*	*96.80*	*195.00*
23056	9 15/16	PLB66159FR	9 1/2	24 3/4	27 7/8	5 1/4	32 3/4	8 3/4	1 1/2	3 3/4	11 3/4	19 1/16	24 1/2	4 1/4	540.00
	10	PLB66160FR													530.00
	10 7/16	PLB66167FR													515.00
	10 1/2	PLB66168FR													510.00
	9 7/16	PLB66B151FR													550.00
	9 1/2	PLB66B152FR													545.00
	260.00	*PLB66M260FR*	*241.30*	*628.60*	*708.00*	*133.40*	*831.80*	*222.20*	*36.00*	*95.25*	*298.40*	*484.20*	*622.30*	*108.00*	*247.20*

Additional Notes

Please call 1-866-REXNORD for availability

Lubrication fitting tap size: for 4 1/2 in *(115 mm)* and smaller shaft sizes, 1/8 in PT: for all other shaft sizes, 1/4 in PT

Expansion - is 1/4 in for 1 3/4 in *(40 mm)* and smaller shaft sizes: all other shaft sizes provide 3/8"

Drain plug tap size - for 3 3/16 in *(80 mm)* and smaller shaft sizes, 1/8 in PT: for 3 7/16 in *(90 mm)* thru 6 in *(150 mm)*, 1/4 in PT: for all other shaft sizes, 1/2 in PT

Minimum extension of shaft beyond locknut, .06 in for closed end unit

Dimension "P" is recommended dimension for cap removal

Multi-labyrinth seals standard

All shaft sizes available with type D5 Pentac seals except when marked with a "*".

For the Selection Guide, Load Ratings and Speed Limits, see the Link-Belt Split Housed Spherical Roller Bearings Engineering section on pages 210 - 223.

Note: Dimensions subject to change. Certified dimensions of ordered material furnished on request.

PLB6800D8,PLB6800FD8,PLB6600FD8

Photo Shows a 2-Bolt Spherical Roller Bearing Two-Piece Pillow Block Unit with Independently Flushable Seals

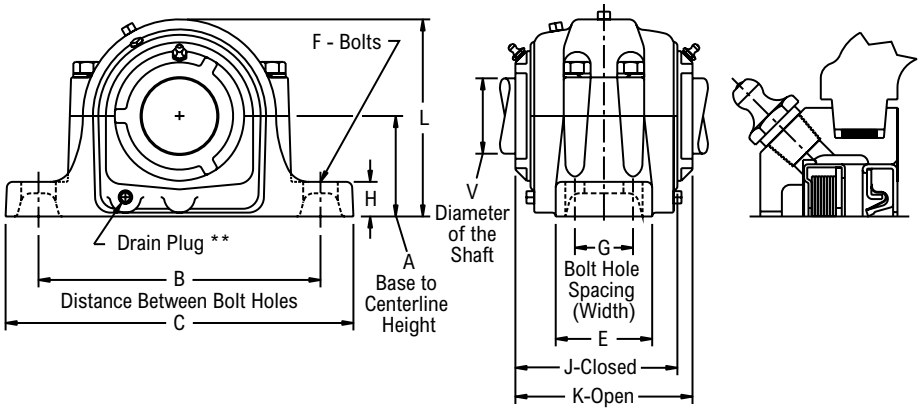

Product Features

- Corrosion-resistant powder coating
- Two piece cast iron housing
- Independently flushable seals
- Fixed or Expansion - up to 3/8 in expansion
- Matched base & cap
- Large reservoir for grease or oil storage
- Tapered adapter mounted
- See Features and Benefits for additional info on pages 206 - 207.

Bearing Dimensions

Size Code	V Shaft Diameter	Part Number	A Base to Centerline Height	B Min. Distance Between Bolt Holes	B Max. Distance Between Bolt Holes	G Bolt Hole Spacing (Width)	C	E	F Bolts	H	J	K	L	P	Approx. Weight
Two-Bolt Pillow Block															
22209	1 7/16	PLB6823D8	2 1/4	6 1/4	7	-	8 1/4	2 3/8	1/2	13/16	4 7/16	5	4 3/8	6 1/4	12.00
	1 1/2	PLB6824D8													11.00
22210	1 11/16	PLB6827D8	2 1/2	6 1/2	7	-	8 1/4	2 3/8	1/2	15/16	4 13/32	4 15/16	4 3/4	6 5/8	13.00
22211	1 15/16	PLB6831D8	2 3/4	7 3/8	7 7/8	-	9 5/8	2 3/4	5/8	15/16	4 23/32	5 5/16	5 1/4	7 1/4	16.00
	2	PLB6832D8													14.00
22213	2 3/16	PLB6835D8	3	8 1/8	9 1/2	-	11	3 1/4	5/8	1	5 1/8	5 5/8	5 15/16	8 1/4	24.00
22215	2 7/16	PLB6839D8	3 1/4	8 5/8	9 5/8	-	11 1/4	3 1/8	5/8	1 1/8	5 17/32	5 15/16	6 3/8	8 3/8	30.00
22216	2 11/16	PLB6843D8	3 1/2	9 5/8	11	-	13	3 1/2	3/4	1 1/4	6 1/32	6 9/16	7	9 1/2	38.00
22217	2 15/16	PLB6847D8	3 3/4	9 7/8	11	-	13	3 1/2	3/4	1 1/4	5 11/16	6 3/8	7 5/16	10	47.00
	3	PLB6848D8													42.00
22218	3 3/16	PLB6851D8	4	10 1/4	11 3/4	-	13 3/4	3 7/8	3/4	1 5/16	6 3/4	7 3/8	7 15/16	10 1/2	52.00
22220	3 7/16	PLB6855D8	4 1/2	11 5/8	13 1/8	-	15 1/4	4 3/8	7/8	1 1/2	6 21/32	7 5/16	8 7/8	11 3/4	79.00
Four-Bolt Pillow Block															
22215	2 7/16	PLB6839FD8	3 1/4	8 5/8	9 5/8	1 7/8	11 1/4	3 1/8	1/2	1 1/8	5 17/32	5 15/16	6 3/8	8 3/8	30.00
22217	2 15/16	PLB6847FD8	3 3/4	9 7/8	11	2	13	3 1/2	5/8	1 1/4	5 11/16	6 3/8	7 5/16	10	47.00
22218	3 3/16	PLB6851FD8	4	10 3/8	11 5/8	2 1/8	13 3/4	3 7/8	5/8	1 5/16	6 3/4	7 3/8	7 15/16	10 1/2	52.00
22220	3 7/16	PLB6855FD8	4 1/2	11 5/8	13 1/8	2 3/8	15 1/4	4 1/2	3/4	1 1/2	6 21/32	7 5/16	8 7/8	11 3/4	79.00
22222	3 11/16	PLB6859FD8	4 15/16	12 5/8	14 1/2	2 3/4	16 1/2	4 3/4	3/4	2	7 7/32	7 15/16	9 5/8	12 1/4	98.00
	3 15/16	PLB6863FD8													
22224	4 3/16	PLB6867FD8	5 1/4	13 1/4	14 1/2	2 3/4	16 1/2	4 3/4	3/4	1 3/4	7 31/32	8 9/16	10 7/16	13 1/2	116.00
22226	4 7/16	PLB6871FD8	6	14 5/8	16	3 1/4	18 3/8	5 1/8	7/8	2 3/8	8 31/64	9 7/32	11 19/32	14 1/2	165.00
22228	4 15/16	PLB6879FD8	6	16	17 1/8	3 3/8	20 1/8	5 7/8	1	2 3/8	8 7/32	8 15/16	11 13/16	15 1/2	184.00
22232	5 7/16	PLB6887FD8	6 11/16	17 3/8	19 1/4	3 3/4	22	6 1/4	1	2 5/8	9 5/32	9 13/16	13 3/8	17	244.00
22234	5 15/16	PLB6895FD8	7 1/16	19 3/8	21 5/8	4 1/4	24 3/4	6 3/4	1	2 3/4	10 1/8	11	14 1/4	18	309.00
	6	PLB6896FD8													
22236	6 7/16	PLB68103FD8	7 1/2	20 7/8	23 5/8	4 5/8	26 3/4	7 1/8	1	3	10 11/16	11 3/8	14 15/16	18 3/4	322.00
	6 1/2	PLB68104FD8													
22238	6 15/16	PLB68111FD8	7 7/8	21 5/8	24 3/8	4 1/2	28	7 1/2	1 1/4	3 1/8	11 11/32	12 1/16	15 13/16	20 1/2	411.00
	7	PLB68112FD8													
22244	7 1/2	PLB68120FD8	9 1/2	24 3/4	27 7/8	5 1/4	32 3/4	8 3/4	1 1/2	3 3/4	12 3/16	13 3/16	18 9/16	24 1/2	750.00
	7 15/16	PLB68127FD8													
	8	PLB68128FD8													
23048	8 7/16	PLB66135FD8	8 1/4	22 1/2	25	5	29 1/2	8	1 1/4	2 3/8	12 1/32	12 11/16	16 3/4	22 1/4	478.00
	8 1/2	PLB66136FD8													
	9	PLB66144FD8													
23056	9 1/2	PLB66B152FD8	9 1/2	24 3/4	27 7/8	5 1/4	32 3/4	8 3/4	1 1/2	2 3/4	13 9/32	14 7/16	19 1/16	24 1/2	605.00
	10 1/2	PLB66168FD8													

Additional Notes

- Please call 1-866-REXNORD for availability
- Lubrication fitting tap size: for 4 1/2 in *(115 mm)* and smaller shaft sizes, 1/8 in PT: for all other shaft sizes, 1/4 in PT
- Seal assembly lubrication fitting tap size: for 1 3/4 in and smaller shaft sizes, 1/4-28 UNF: for all other shaft sizes, 1/8 in PT
- Recommended shaft finish under D8 seals, 10-20 micro inches
- Expansion - is 1/4 in for 1 3/4 in *(40 mm)* and smaller shaft sizes: all other shaft sizes provide 3/8 in
- Drain plug tap size - for 3 3/16 in *(80 mm)* and smaller shaft sizes, 1/8 in PT: for 3 7/16 in *(90 mm)* thru 6 in *(150 mm)*, 1/4 in PT: for all other shaft sizes, 1/2 in PT
- Minimum extension of shaft beyond locknut, .06 in for closed end unit
- Dimension "P" is recommended dimension for cap removal
- Taconite seals standard
- For the Selection Guide, Load Ratings and Speed Limits, see the Link-Belt Split Housed Spherical Roller Bearings Engineering section on pages 210 - 223.
- Note: Dimensions subject to change. Certified dimensions of ordered material furnished on request.

BPLB6800

Photo Shows a 2-Bolt Spherical Roller Bearing
Two-Piece Pillow Block Unit

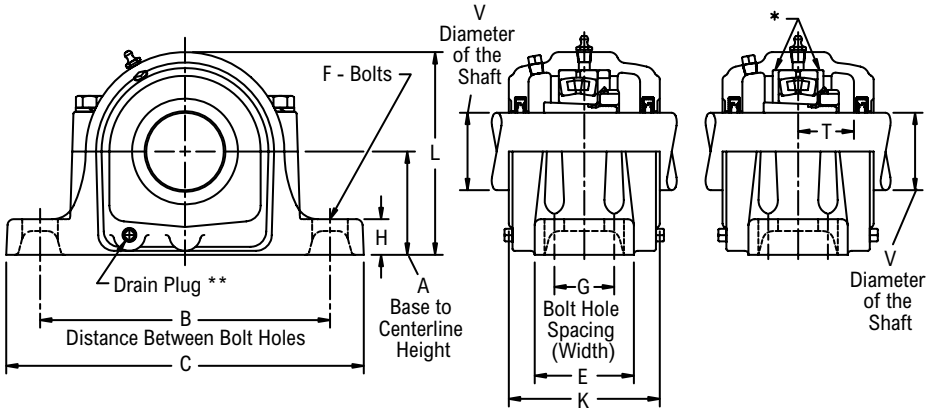

Fixed Expansion

Product Features

- Corrosion-resistant nylon coating
- Two piece cast iron housing
- Stainless steel hardware
- Patented T contact water seal
- Fixed or Expansion - up to 3/8 in expansion
- Matched base & cap
- Large reservoir for grease or oil storage
- Tapered adapter mounted
- See Features and Benefits for additional info on pages 206 - 207.

Bearing Dimensions

Size Code	V Shaft Diameter	Part Number	A Base to Centerline Height	B Min. Distance Between Bolt Holes	B Max. Distance Between Bolt Holes	G Bolt Hole Spacing (Width)	C	E	F Bolts	H	K	L	P	T	Approx. Weight
Two-Bolt Pillow Block															
22209	1 7/16	BPLB6823	2 1/4	6 1/4	7	-	8 1/4	2 3/8	1/2	13/16	3 5/8	4 3/8	6 1/4	1 1/16	11.00
22213	2 3/16	BPLB6835	3	8 1/8	9 1/2	-	11	3 1/4	5/8	1	4 3/8	5 15/16	8 1/4	1 13/32	22.00
22215	2 7/16	BPLB6839	3 1/4	8 5/8	9 5/8	-	11 1/4	3 1/8	5/8	1 1/8	4 3/4	6 3/8	8 3/8	1 15/32	27.00
22216	2 11/16	BPLB6843	3 1/2	9 5/8	11	-	13	3 1/2	3/4	1 1/4	5 1/4	7	9 1/2	1 1/2	38.00
22217	2 15/16	BPLB6847	3 3/4	9 7/8	11	-	13	3 1/2	3/4	1 1/4	5	7 5/16	10	1 19/32	42.00
22218	3 3/16	BPLB6851	4	10 1/4	11 3/4	-	13 3/4	3 7/8	3/4	1 5/16	5 7/8	7 15/16	10 1/2	1 3/4	47.00
Four-Bolt Pillow Block															
22215	2 7/16	BPLB6839F	3 1/4	8 5/8	9 5/8	1 7/8	11 1/4	3 1/8	1/2	1 1/8	4 3/4	6 3/8	8 3/8	1 15/32	27.00
22216	2 11/16	BPLB6843F	3 1/2	9 5/8	11	2	13	3 1/2	5/8	1 1/4	5 1/4	7	9 1/2	1 1/2	38.00
22217	2 15/16	BPLB6847F	3 3/4	9 7/8	11	2	13	3 1/2	5/8	1 1/4	5	7 5/16	10	1 19/32	42.00
22218	3 3/16	BPLB6851F	4	10 3/8	11 5/8	2 1/8	13 3/4	3 7/8	5/8	1 5/16	5 7/8	7 15/16	10 1/2	1 3/4	47.00
22222	3 15/16	BPLB6863F	4 15/16	12 5/8	14 1/2	2 3/4	16 1/2	4 3/4	3/4	2	6 1/2	9 5/8	12 1/4	2 1/8	87.00
22226	4 1/2	BPLB6872F	6	14 5/8	16	3 1/4	18 3/8	5 1/8	7/8	2 3/8	7 3/4	11 11/32	14 1/2	2 15/32	149.00
22228	4 15/16	BPLB6879F	6	16	17 1/8	3 3/8	20 1/8	5 7/8	1	2 3/8	7 3/4	11 13/16	15 1/2	2 5/8	167.00

Additional Notes

- Please call 1-866-REXNORD for availability
- Lubrication fitting tap size: for 4 1/2 in and smaller shaft sizes, 1/8 in PT: for all other shaft sizes, 1/4 in PT
- Expansion - is 1/4 in for 1 7/16 in : all other shaft sizes provide 3/8 in
- Drain plug tap size - for 3 3/16 in and smaller shaft sizes, 1/8 in PT: for all other shaft sizes, 1/4 in PT
- Minimum extension of shaft beyond locknut, .06 in for closed end unit
- Dimension “P” is recommended dimension for cap removal
- Exclusive T water seals standard
- For the Selection Guide, Load Ratings and Speed Limits, see the Link-Belt Split Housed Spherical Roller Bearings Engineering section on pages 210 - 223.
- Note: Dimensions subject to change. Certified dimensions of ordered material furnished on request.

PKLB6800F, PKLB6600F

Photo Shows a 4-Bolt Spherical Roller Bearing Two-Piece Pillow Block Unit

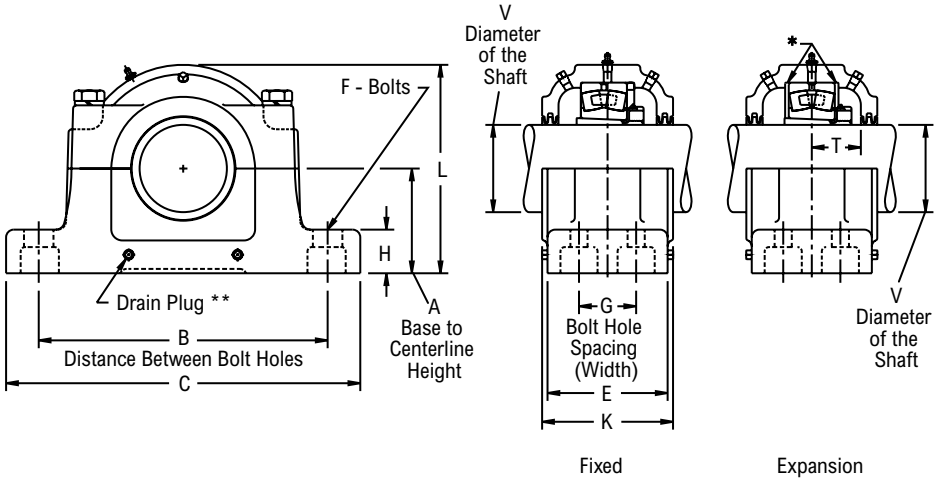

Product Features

- Corrosion-resistant powder coating
- Two piece cast steel housing
- Broad range of sealing options
- Fixed or Expansion - up to 3/8 in expansion
- Matched base & cap
- Large reservoir for grease or oil storage
- Tapered adapter mounted
- See Features and Benefits for additional info on pages 206 - 207.

Bearing Dimensions

Size Code	V Shaft Diameter	Part Number	A Base to Centerline Height	B Min. Distance Between Bolt Holes	B Max. Distance Between Bolt Holes	G Bolt Hole Spacing (Width)	C	E	F Bolts	H	K	L	P	T	Approx. Weight
22215	2 7/16	PKLB6839FR	3 1/4	8 5/8	9 5/8	1 7/8	11 1/4	4 3/8	1/2	1 1/2	4 3/4	6 3/8	10 1/4	1 15/32	37.00
	65.00	*PKLB68M65FR*	*82.55*	*219.10*	*244.50*	*47.60*	*285.80*	*111.10*	*12.00*	*38.10*	*120.60*	*161.90*	*260.40*	*37.30*	*16.80*
22216	2 11/16	PKLB6843FR	3 1/2	9 5/8	11	2	13	4 7/8	5/8	1 5/8	5 1/4	7	11	1 1/2	51.00
	70.00	*PKLB68M70FR*	*88.90*	*244.50*	*279.40*	*50.80*	*330.20*	*123.80*	*16.00*	*41.30*	*133.40*	*177.80*	*279.40*	*38.10*	*23.10*
22217	2 15/16	PKLB6847FR	3 3/4	9 7/8	11	2	13	4 7/8	5/8	1 5/8	5 1/4	7 3/8	11 1/2	1 19/32	51.00
	3	PKLB6848FR													
	75.00	*PKLB68M75FR*	*95.25*	*250.80*	*279.40*	*50.80*	*330.20*	*123.80*	*16.00*	*41.30*	*133.40*	*187.30*	*292.10*	*40.50*	*23.10*
22220	3 7/16	PKLB6855FR	4 1/2	11 5/8	13 1/8	2 3/8	15 1/4	6	3/4	1 7/8	6 1/2	8 13/16	13 3/4	1 29/32	97.00
	3 1/2	PKLB6856FR													
	90.00	*PKLB68M90FR*	*114.30*	*295.30*	*333.40*	*60.30*	*387.40*	*152.40*	*20.00*	*47.60*	*165.10*	*223.80*	*349.20*	*48.40*	*44.00*
22222	3 11/16	PKLB6859FR	4 15/16	12 5/8	14 1/2	2 3/4	16 1/2	6 1/2	3/4	2	7	9 3/4	15 1/4	2 1/8	112.00
	3 15/16	PKLB6863FR													
	4	PKLB6864FR													
	100.00	*PKLB68M100FR*	*125.41*	*320.70*	*368.30*	*69.80*	*419.10*	*165.10*	*20.00*	*50.80*	*177.80*	*247.60*	*387.40*	*54.00*	*50.80*
22226	4 7/16	PKLB6871FR	6	14 5/8	16	3 1/4	18 3/8	7 1/4	7/8	2 1/4	7 3/4	11 1/2	18 1/4	2 15/32	200.00
	4 1/2	PKLB6872FR													196.00
	115.00	*PKLB68M115FR*	*152.40*	*371.50*	*406.40*	*82.60*	*466.70*	*184.20*	*24.00*	*57.20*	*196.80*	*292.10*	*463.60*	*62.70*	*88.90*
22228	4 15/16	PKLB6879FR	6	16	17 1/8	3 3/8	20 1/8	6 7/8	1	2 1/2	7 1/2	11 15/16	19 1/4	2 5/8	207.00
	5	PKLB6880FR													
	125.00	*PKLB68M125FR*	*152.40*	*406.40*	*435.00*	*85.70*	*511.20*	*174.60*	*24.00*	*63.50*	*190.50*	*303.20*	*489.00*	*66.70*	*93.90*
22232	5 7/16	PKLB6887FR	6 11/16	17 3/8	19 1/4	3 3/4	22	8	1	2 3/4	8 1/2	13 1/2	20 1/2	2 31/32	270.00
	140.00	*PKLB68M140FR*	*169.86*	*441.30*	*489.00*	*95.20*	*558.80*	*203.20*	*24.00*	*69.80*	*215.90*	*342.90*	*520.70*	*75.40*	*122.50*
22234	5 15/16	PKLB6895FR	7 1/16	19 3/8	21 5/8	4 1/4	24 3/4	8 3/4	1	3	9 1/4	14 1/4	22 1/4	3 1/8	368.00
	6	PKLB6896FR													
	150.00	*PKLB68M150FR*	*179.39*	*492.10*	*549.30*	*108.00*	*628.60*	*222.20*	*24.00*	*76.20*	*235.00*	*362.00*	*565.20*	*79.40*	*166.90*
22236	6 7/16	PKLB68103FR	7 1/2	20 7/8	23 5/8	4 5/8	26 3/4	9 1/8	1	3 1/4	9 5/8	14 15/16	23 1/4	3 5/32	390.00
	6 1/2	PKLB68104FR													
	160.00	*PKLB68M160FR*	*190.50*	*530.20*	*600.10*	*117.50*	*679.40*	*231.80*	*24.00*	*82.60*	*244.50*	*379.40*	*590.60*	*80.20*	*176.90*
22238	6 15/16	PKLB68111FR	7 7/8	21 5/8	24 3/8	4 1/2	28	9 3/4	1 1/4	3 1/4	10 1/4	15 13/16	25	3 5/16	470.00
	7	PKLB68112FR													
	170.00	*PKLB68M170FR*	*200.02*	*549.30*	*619.10*	*114.30*	*711.20*	*247.60*	*30.00*	*82.60*	*260.40*	*401.60*	*635.00*	*84.10*	*213.20*
22244	7 1/2	PKLB68120FR	9 1/2	25 7/8	27 5/8	7 1/4	32	12	1 3/4	4	12 5/8	18 11/16	29 1/4	3 13/16	875.00
	7 15/16	PKLB68127FR													830.00
	8	PKLB68128FR													

Continued...

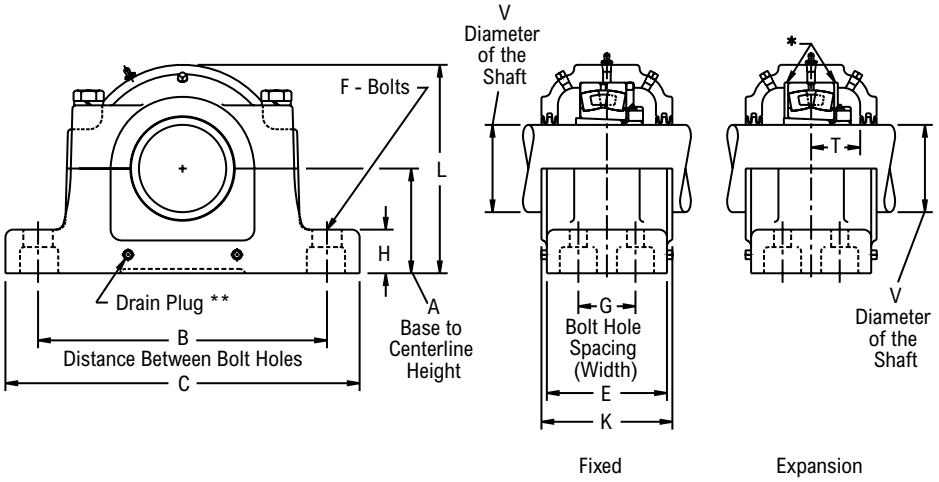

Continued...

Bearing Dimensions

Size Code	V Shaft Diameter	Part Number	A Base to Centerline Height	B Min. Distance Between Bolt Holes	B Max. Distance Between Bolt Holes	G Bolt Hole Spacing (Width)	C	E	F Bolts	H	K	L	P	T	Approx. Weight
22244	*200.00*	*PKLB68M200FR*	*241.30*	*657.20*	*701.70*	*184.20*	*812.80*	*304.80*	*48.00*	*101.60*	*320.70*	*474.70*	*743.00*	*96.80*	*376.50*
23048	8 1/2	PKLB66136FR*	8 1/4	22 1/2	25	5	29 1/2	10 3/8	1 1/4	3 1/2	11	16 1/2	26 1/2	3 13/16	562.00
	9	PKLB66144FR													528.00
	220.00	*PKLB66M220FR*	*209.55*	*571.50*	*635.00*	*127.00*	*749.30*	*263.50*	*30.00*	*88.90*	*279.40*	*419.10*	*673.10*	*96.80*	*240.40*
23056	9 1/2	PKLB66B152FR	9 1/2	25 7/8	27 5/8	7 1/4	32	12	1 3/4	4	12 5/8	18 11/16	29 1/4	4 1/4	800.00
	9 15/16	PKLB66159FR													790.00
	10	PKLB66160FR													780.00
	10 1/2	PKLB66168FR													770.00
	260.00	*PKLB66M260FR*	*241.30*	*657.20*	*701.70*	*184.20*	*812.80*	*304.80*	*48.00*	*101.60*	*320.70*	*474.70*	*743.00*	*108.00*	*358.30*

Additional Notes

Please call 1-866-REXNORD for availability

Lubrication fitting tap size, 1/4 in PT

Expansion - is 3/8 in for all shaft sizes

Drain plug tap size - for 6 in *(150 mm)* and smaller shaft sizes, 1/4 in PT: for all other shaft sizes, 1/2 in PT

Minimum extension of shaft beyond locknut, .06 in for closed end unit

Dimension "P" is recommended dimension for cap removal

Multi-labyrinth seals standard

All shaft sizes available with type D5 Pentac seals except when marked with a "*".

For the Selection Guide, Load Ratings and Speed Limits, see the Link-Belt Split Housed Spherical Roller Bearings Engineering section on pages 210 - 223.

Note: Dimensions subject to change. Certified dimensions of ordered material furnished on request.

PKLB6800FD8

Photo Shows a 2-Bolt Spherical Roller Bearing Two-Piece Pillow Block Unit with Independently Flushable Seals

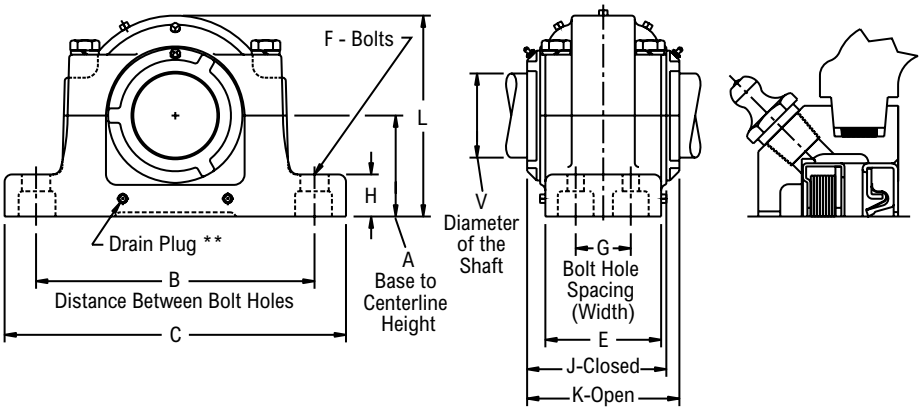

Product Features

- Corrosion-resistant powder coating
- Two piece cast steel housing
- Independently flushable seals
- Fixed or Expansion - up to 3/8 in expansion
- Matched base & cap
- Large reservoir for grease or oil storage
- Tapered adapter mounted
- See Features and Benefits for additional info on pages 206 - 207.

Bearing Dimensions

Size Code	V Shaft Diameter	Part Number	A Base to Centerline Height	B Min. Distance Between Bolt Holes	B Max. Distance Between Bolt Holes	G Bolt Hole Spacing (Width)	C	E	F Bolts	H	J	K	L	P	Approx. Weight
22215	2 7/16	PKLB6839FD8	3 1/4	8 5/8	9 5/8	1 7/8	11 1/4	4 3/8	1/2	1 1/2	5 17/32	6 1/16	6 3/8	10 1/4	41.00
22217	2 15/16	PKLB6847FD8	3 3/4	9 7/8	11	2	13	4 7/8	5/8	1 5/8	6 1/16	6 5/8	7 3/8	11 1/2	57.00
22220	3 7/16	PKLB6855FD8	4 1/2	11 5/8	13 1/8	2 3/8	15 1/4	6	3/4	1 7/8	6 21/32	7 5/16	8 13/16	13 3/4	97.00
22226	4 7/16	PKLB6871FD8	6	14 5/8	16	3 1/4	18 3/8	7 1/4	7/8	2 1/4	8 5/8	9 1/4	11 1/2	18 1/4	190.00
22228	4 15/16	PKLB6879FD8	6	16	17 1/8	3 3/8	20 1/8	6 7/8	1	2 1/2	8 3/8	9	11 15/16	19 1/4	210.00
22236	6 7/16	PKLB68103FD8	7 1/2	20 7/8	23 5/8	4 5/8	26 3/4	9 1/8	1	3 1/4	10 11/16	11 3/8	14 15/16	23 1/4	422.00

Additional Notes

- Please call 1-866-REXNORD for availability
- Lubrication fitting tap size, 1/4 in PT
- Seal assembly lubrication fitting tap size, 1/8 in PT
- Recommended shaft finish under D8 seals, 10-20 micro inches
- Expansion - is 3/8 in for all shaft sizes
- Drain plug tap size - for 4 15/16 in and smaller shaft sizes, 1/4 in PT: for all other shaft sizes, 1/2 in PT
- Minimum extension of shaft beyond locknut, .06 in for closed end unit
- Dimension “P” is recommended dimension for cap removal
- Taconite seals standard
- For the Selection Guide, Load Ratings and Speed Limits, see the Link-Belt Split Housed Spherical Roller Bearings Engineering section on pages 210 - 223.
- Note: Dimensions subject to change. Certified dimensions of ordered material furnished on request.

PLB6900,PLB6900F, SAF22600

Interchange: *USAF 600, SAF22600*

Photo Shows a 2-Bolt Spherical Roller Bearing Two-Piece Pillow Block Unit

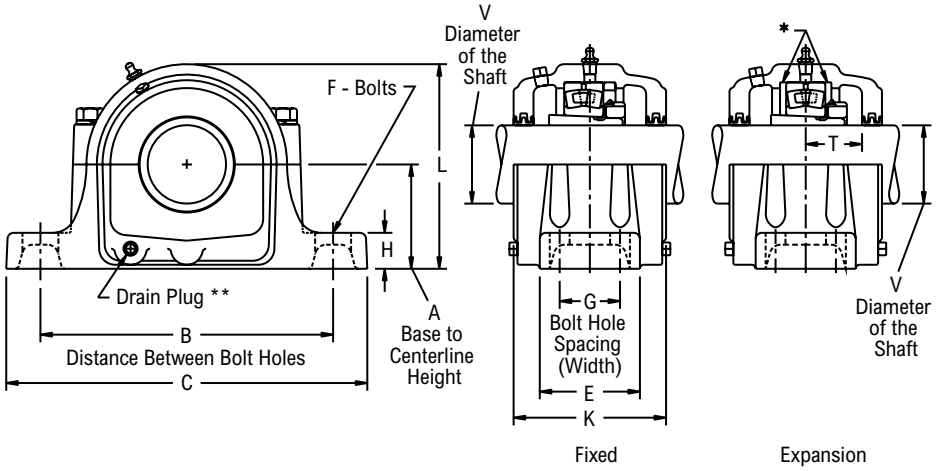

Product Features

- Corrosion-resistant powder coating
- Two piece cast iron housing
- Broad range of sealing options
- Fixed or Expansion - up to 3/8 in expansion
- Matched base & cap
- Large reservoir for grease or oil storage
- Tapered adapter mounted
- See Features and Benefits for additional info on pages 206 - 207.

Bearing Dimensions

Size Code	V Shaft Diameter	Part Number	A Base to Centerline Height	B Min. Distance Between Bolt Holes	B Max. Distance Between Bolt Holes	G Bolt Hole Spacing (Width)	C	E	F Bolts	H	K	L	P	T	Approx. Weight
Two-Bolt Pillow Block															
22309	1 7/16	PLB6923R	2 3/4	7 1/4	8	-	9 5/8	2 3/4	5/8	1	4 1/8	5 3/8	7 1/2	1 5/16	20.00
	1 1/2	PLB6924R*													
22310	1 11/16	PLB6927R	3	7 3/4	9	-	10 5/8	2 3/4	5/8	1 1/8	4 1/2	5 7/8	7 7/8	1 15/32	23.00
22311	1 15/16	PLB6931R	3 1/4	8 1/8	9 1/2	-	11	3 1/8	5/8	1 3/16	4 3/4	6 5/16	8 1/2	1 9/16	28.00
	2	PLB6932R													
22313	2 3/16	PLB6935R	3 1/2	9 5/8	11	-	13	3 1/2	3/4	1 1/4	5 1/4	7	9 5/8	1 23/32	41.00
22315	2 7/16	PLB6939R	4	10 3/8	11 5/8	-	13 3/4	3 7/8	3/4	1 5/16	5 7/8	7 15/16	10 1/2	1 15/16	52.00
	2 1/2	PLB6940R													
22316	2 11/16	PLB6943R	4 1/4	10 5/8	12 5/8	-	14 1/4	3 7/8	3/4	1 5/16	6 1/8	8 3/8	11 1/4	2	59.00
22317	2 15/16	PLB6947R	4 1/2	11 5/8	13 1/8	-	15 1/4	4 3/8	7/8	1 1/2	6 1/2	8 7/8	11 3/4	2 1/2	71.00
Four-Bolt Pillow Block															
22313	2 3/16	PLB6935FR	3 1/2	9 5/8	11	2	13	3 1/2	5/8	1 1/4	5 1/4	7	9 5/8	1 23/32	41.00
22315	2 7/16	PLB6939FR	4	10 3/8	11 5/8	2 1/8	13 3/4	3 7/8	5/8	1 5/16	5 7/8	7 15/16	10 1/2	1 15/16	52.00
	2 1/2	PLB6940FR													
22316	2 11/16	PLB6943FR	4 1/4	10 5/8	12 5/8	2 1/4	14 1/4	3 7/8	5/8	1 5/16	6 1/8	8 3/8	11 1/4	2	59.00
22317	2 15/16	PLB6947FR	4 1/2	11 5/8	13 1/8	2 3/8	15 1/4	4 3/8	3/4	1 1/2	6 1/2	8 7/8	11 3/4	2 1/2	71.00
22318	3 3/16	SAF22618303	4 3/4	12	13 1/2	2 1/4	15 1/2	4 3/8	3/4	2	6 7/8	9 1/4	12 1/4	2 7/32	97.00
22320	3 7/16	SAF22620307	5 1/4	13 1/4	14 1/2	2 3/4	16 1/2	4 3/4	3/4	1 3/4	7 1/8	10 7/16	13 1/2	2 7/16	111.00
	3 1/2	SAF22620308													
22322	3 15/16	SAF22622315	6	14 5/8	16	3 1/4	18 3/8	5 1/8	7/8	1 7/8	7 3/4	11 11/16	14 1/2	2 21/32	149.00
	4	SAF22622400													
22324	4 3/16	SAF22624403	6 5/16	17	18 1/4	3 3/4	21 1/4	6 1/4	1	2 1/2	8 3/8	12 1/2	16	2 13/16	225.00
22326	4 7/16	SAF22626407	6 11/16	17 3/8	19 1/4	3 3/4	22	6 1/4	1	2 5/8	8 3/4	13 5/16	17	3 5/16	228.00
22328	4 15/16	SAF22628415	7 1/16	19 3/8	21 5/8	4 1/4	24 3/4	6 3/4	1	2 3/4	9 5/8	14 3/16	18	3 1/4	330.00
	5	SAF22628500													
22330	5 3/16	SAF22630503	7 1/2	20 7/8	23 5/8	4 5/8	26 3/4	7 1/8	1	3	9 3/4	14 7/8	18 3/4	3 7/16	375.00
22332	5 7/16	SAF22632507	7 7/8	21 5/8	24 3/8	4 1/2	28	7 1/2	1 1/4	3 1/8	10 3/4	15 11/16	20 1/2	3 5/8	430.00
22334	5 15/16	SAF22634515	8 1/4	22 1/2	25	5	29 1/2	8	1 1/4	3 3/8	11 1/4	16 1/2	22 1/4	3 3/4	515.00
22348	8 15/16	PLB22648K81516	12	32 3/4	33 1/2	9	38 1/4	14 3/4	1 5/8	3 1/2	15 1/2	24	-	-	1,370.00
22356	10 7/16	PLB22656K10716	14	36 3/4	38 1/4	10 3/4	43 3/4	18 1/4	2	5	18	28	-	-	2,262.00

Additional Notes

- Please call 1-866-REXNORD for availability
- Lubrication fitting tap size: for 2 11/16 in and smaller shaft sizes, 1/8 in PT: for all other shaft sizes, 1/4 in PT
- Expansion - is 3/8 in for all shaft sizes
- Drain plug tap size - for 2 11/16 in and smaller shaft sizes, 1/8 in PT: for all other shaft sizes, 1/4 in PT
- Minimum extension of shaft beyond locknut, .06 in for closed end unit
- Dimension "P" is recommended dimension for cap removal
- Multi-labyrinth seals standard
- All shaft sizes available with type D5 Pentac seals except when marked with a "*".
- For the Selection Guide, Load Ratings and Speed Limits, see the Link-Belt Split Housed Spherical Roller Bearings Engineering section on pages 210 - 223.
- Note: Dimensions subject to change. Certified dimensions of ordered material furnished on request.

PLB7800, PLB7800F, PLB7600F

Interchange: *USAF 200, SAF22200*

Photo Shows a 2-Bolt Spherical Roller Bearing Two-Piece Pillow Block Unit

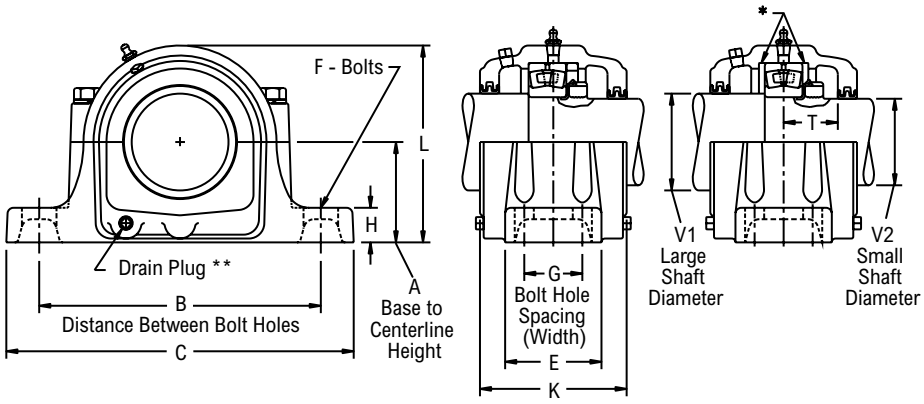

Fixed

Expansion

Product Features

- Corrosion-resistant powder coating
- Two piece cast iron housing
- Fixed or Expansion - up to 3/8 in expansion
- Matched base & cap
- Large reservoir for grease or oil storage
- Direct shaft mounted
- See Features and Benefits for additional info on pages 206 - 207.

Bearing Dimensions

Size Code	Shaft Diameter	V1 Large Shaft Diameter	V2 Small Shaft Diameter	Part Number	A Base to Centerline Height	B Min. Distance Between Bolt Holes	B Max. Distance Between Bolt Holes	G Bolt Hole Spacing (Width)	C	E	F Bolts	H	K	L	P	T	Approx. Weight
Two-Bolt Pillow Block																	
22215	2.95	3 7/16	2 13/16	PLB7875R	3 1/4	8 5/8	9 5/8	-	11 1/4	3 1/8	5/8	1 1/8	4 3/4	6 3/8	8 3/8	1 15/32	35.00
22216	3.15	3 5/8	3	PLB7880R	3 1/2	9 5/8	11	-	13	3 1/2	3/4	1 1/4	5 1/4	7	9 1/2	1 1/2	35.00
22217	3.35	3 15/16	3 3/16	PLB7885R	3 3/4	9 7/8	11	-	13	3 1/2	3/4	1 1/4	5	7 5/16	10	1 19/32	40.00
22218	3.54	4 1/8	3 3/8	PLB7890R	4	10 3/8	11 5/8	-	13 3/4	3 7/8	3/4	1 5/16	5 7/8	7 15/16	10 1/2	1 3/4	42.00
22220	3.94	4 1/2	3 13/16	PLB78100R	4 1/2	11 5/8	13 1/8	-	15 1/4	4 3/8	7/8	1 1/2	6	8 7/8	11 3/4	1 29/32	62.00
Four-Bolt Pillow Block																	
22215	2.95	3 7/16	2 13/16	PLB7875FR	3 1/4	8 5/8	9 5/8	1 7/8	11 1/4	3 1/8	1/2	1 1/8	4 3/4	6 3/8	8 3/8	1 15/32	35.00
22216	3.15	3 5/8	3	PLB7880FR	3 1/2	9 5/8	11	2	13	3 1/2	5/8	1 1/4	5 1/4	7	9 1/2	1 1/2	35.00
22217	3.35	3 15/16	3 3/16	PLB7885FR	3 3/4	9 7/8	11	2	13	3 1/2	5/8	1 1/4	5	7 5/16	10	1 19/32	40.00
22218	3.54	4 1/8	3 3/8	PLB7890FR	4	10 3/8	11 5/8	2 1/8	13 3/4	3 7/8	5/8	1	5 7/8	7 15/16	10 1/2	1 3/4	42.00
22220	3.94	4 1/2	3 13/16	PLB78100FR	4 1/2	11 5/8	13 1/8	2 3/8	15 1/4	4 1/2	3/4	1 1/2	6	8 7/8	11 3/4	1 29/32	62.00
22222	4.33	4 7/8	4 3/16	PLB78110FR	4 15/16	12 5/8	14 1/2	2 3/4	16 1/2	4 3/4	3/4	2	6 1/2	9 5/8	12 1/4	2 1/8	78.00
22224	4.72	5 5/16	4 9/16	PLB78120FR	5 1/4	13 1/4	14 1/2	2 3/4	16 1/2	4 3/4	3/4	1 3/4	7 1/8	10 7/16	13 1/2	2 9/32	102.00
22226	5.12	5 7/8	4 15/16	PLB78130FR	6	14 5/8	16	3 1/4	18 3/8	5 1/8	7/8	2 3/8	7 3/4	11 19/32	14 1/2	2 15/32	141.00
22228	5.51	6 1/4	5 5/16	PLB78140FR	6	16	17 1/8	3 3/8	20 1/8	5 7/8	1	2 3/8	7 3/4	11 13/16	15 1/2	2 5/8	162.00
22230	5.91	6 5/8	5 3/4	PLB78150FR	6 5/16	17	18 1/4	3 3/4	21 1/4	6 1/4	1	2	8 1/8	12 9/16	16	2 3/4	182.00
22232	6.30	7	6 1/16	PLB78160FR	6 11/16	17 3/8	19 1/4	3 3/4	22	6 1/4	1	2 5/8	8 1/2	13 3/8	17	2 31/32	202.00
22234	6.69	7 7/16	6 7/16	PLB78170FR	7 1/16	19 3/8	21 5/8	4 1/4	24 3/4	6 3/4	1	2 3/4	9 1/4	14 1/4	18	3 1/8	240.00
22236	7.09	7 13/16	6 7/8	PLB78180FR	7 1/2	20 7/8	23 5/8	4 5/8	26 3/4	7 1/8	1	3	9 5/8	14 15/16	18 3/4	3 5/32	279.00
22238	7.48	8 3/8	7 1/4	PLB78190FR	7 7/8	21 5/8	24 3/8	4 1/2	28	7 1/2	1 1/4	3 1/8	10 1/4	15 13/16	20 1/2	3 5/16	345.00
22240	7.87	8 3/4	7 5/8	PLB78200FR	8 1/4	22 1/2	25	5	29 1/2	8	1 1/4	2 3/8	11	16 3/4	22 1/4	3 17/32	415.00
22244	8.66	9 9/16	8 5/16	PLB22244	9 1/2	24 3/4	27 7/8	5 1/4	32 3/4	8 3/4	1 1/2	3 3/4	11 7/8	18 5/8	-	-	620.00
				PLB78220FR									11 3/16	18 9/16	24 1/2	3 13/16	
22248	9.45	10 1/2	9 3/16	PLB22248	10 1/4	29	30 1/2	8 3/4	35	14 1/2	1 5/8	3 3/4	14 1/8	20 1/2	-	-	976.00
23048	9.45	10 1/2	9 3/16	PLB76240FR	8 1/4	22 1/2	25	5	29 1/2	8	1 1/4	2 3/8	11	16 3/4	22 1/4	3 13/16	430.00
23056	11.02	12	10 3/4	PLB76280FR	9 1/2	24 3/4	27 7/8	5 1/4	32 3/4	8 3/4	1 1/2	2 3/4	11 3/4	19 1/16	24 1/2	4 1/4	595.00

Additional Notes

- Please call 1-866-REXNORD for availability
- Lubrication fitting tap size: for 3.5433 in *(90 mm)* and smaller shaft sizes, 1/8 in PT: for all other shaft sizes, 1/4 in PT
- Expansion - is 3/8 in for all shaft sizes
- Drain plug tap size - for 3.5433 in *(90 mm)* and smaller shaft sizes, 1/8 in PT: for 3.9370 in *(100 mm)* thru 6.6929 in *(170 mm)*, 1/4 in PT: for all other shaft sizes, 1/2 in PT
- Minimum extension of shaft beyond locknut, .06 in for closed end unit
- Dimension "P" is recommended dimension for cap removal
- Multi-labyrinth seals standard
- For the Selection Guide, Load Ratings and Speed Limits, see the Link-Belt Split Housed Spherical Roller Bearings Engineering section on pages 210 - 223.
- For shaft bearing seat diameters, see Link-Belt Spherical Roller Bearings Shaft & Housing Seat Diameters section on pages 266 - 269.
- Note: Dimensions subject to change. Certified dimensions of ordered material furnished on request.

PKLB7800F, PKLB7600F

Photo Shows a 4-Bolt Spherical Roller Bearing Two-Piece Pillow Block Unit

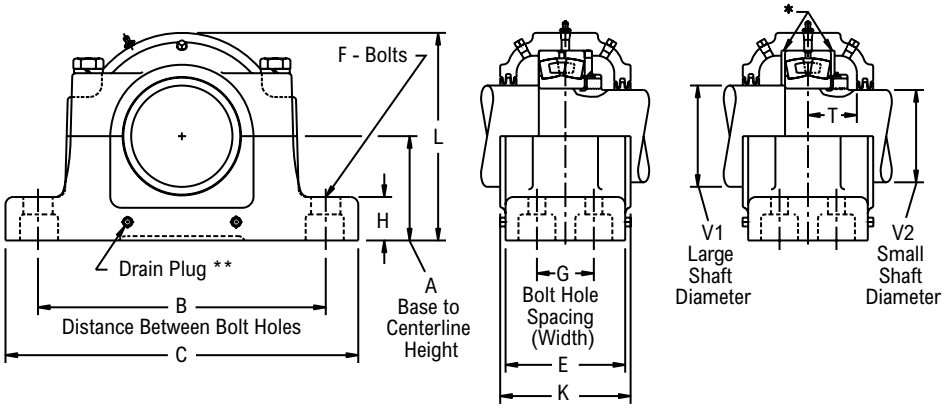

Fixed

Expansion

Product Features

- Corrosion-resistant powder coating
- Two piece cast steel housing
- Fixed or Expansion - up to 3/8 in expansion
- Matched base & cap
- Large reservoir for grease or oil storage
- Direct shaft mounted
- See Features and Benefits for additional info on pages 206 - 207.

Bearing Dimensions

Size Code	Shaft Diameter	V1 Large Shaft Diameter	V2 Small Shaft Diameter	Part Number	A Base to Centerline Height	B Min. Distance Between Bolt Holes	B Max. Distance Between Bolt Holes	G Bolt Hole Spacing (Width)	C	E	F Bolts	H	K	L	P	T	Approx. Weight
22215	2.9528	3 7/16	2 13/16	PKLB7875FR	3 1/4	8 5/8	9 5/8	1 7/8	11 1/4	4 3/8	1/2	1 1/2	4 3/4	6 3/8	10 1/4	1 15/32	35.00
22216	3.1496	3 5/8	3	PKLB7880FR	3 1/2	9 5/8	11	2	13	4 7/8	5/8	1 5/8	5 1/4	7	11	1 1/2	48.00
22217	3.3465	3 15/16	3 3/16	PKLB7885FR	3 3/4	9 7/8	11	2	13	4 7/8	5/8	1 5/8	5 1/4	7 3/8	11 1/2	1 19/32	50.00
22220	3.9370	4 1/2	3 13/16	PKLB78100FR	4 1/2	11 5/8	13 1/8	2 3/8	15 1/4	6	3/4	1 7/8	6 1/2	8 13/16	13 3/4	1 29/32	85.00
22222	4.3307	4 7/8	4 3/16	PKLB78110FR	4 15/16	12 5/8	14 1/2	2 3/4	16 1/2	6 1/2	3/4	2	7	9 3/4	15 1/4	2 1/8	105.00
22226	5.1181	5 7/8	4 15/16	PKLB78130FR	6	14 5/8	16	3 1/4	18 3/8	7 1/4	7/8	2 1/4	7 3/4	11 1/2	18 1/4	2 15/32	187.00
22228	5.5118	6 1/4	5 5/16	PKLB78140FR	6	16	17 1/8	3 3/8	20 1/8	6 7/8	1	2 1/2	7 1/2	11 15/16	19 1/4	2 5/8	190.00
22232	6.2992	7	6 1/16	PKLB78160FR	6 11/16	17 3/8	19 1/4	3 3/4	22	8	1	2 3/4	8 1/2	13 1/2	20 1/2	2 31/32	250.00
22234	6.6929	7 7/16	6 7/16	PKLB78170FR	7 1/16	19 3/8	21 5/8	4 1/4	24 3/4	8 3/4	1	3	9 1/4	14 1/4	22 1/4	3 1/8	344.00
22236	7.0866	7 13/16	6 7/8	PKLB78180FR	7 1/2	20 7/8	23 5/8	4 5/8	26 3/4	9 1/8	1	3 1/4	9 5/8	14 15/16	23 1/4	3 5/32	365.00
22238	7.4803	8 3/8	7 1/4	PKLB78190FR	7 7/8	21 5/8	24 3/8	4 1/2	28	9 3/4	1 1/4	3 1/4	10 1/4	15 13/16	25	3 5/16	450.00
22244	8.6614	9 9/16	8 5/16	PKLB78220FR	9 1/2	25 5/8	27 7/8	7 1/4	32	12	1 3/4	4	12 5/8	18 11/16	29 1/4	3 13/16	770.00
23048	9.4488	10 1/2	9 3/16	PKLB76240FR	8 1/4	22 1/2	25	5	29 1/2	10 3/8	1 1/4	3 1/2	11	16 1/2	26 1/2	3 13/16	530.00
23056	11.0236	12	10 3/4	PKLB76280FR	9 1/2	25 7/8	27 5/8	7 1/4	32	12	1 3/4	4	12 5/8	18 11/16	29 1/4	4 1/4	745.00

Additional Notes

- Please call 1-866-REXNORD for availability
- Lubrication fitting tap size, 1/4 in PT
- Expansion - is 3/8 in for all shaft sizes
- Drain plug tap size - for 6.6929 in *(170 mm)* and smaller shaft sizes, 1/4 in PT: for all other shaft sizes, 1/2 in PT
- Minimum extension of shaft beyond locknut, .06 in for closed end unit
- Dimension "P" is recommended dimension for cap removal
- Multi-labyrinth seals standard

- For the Selection Guide, Load Ratings and Speed Limits, see the Link-Belt Split Housed Spherical Roller Bearings Engineering section on pages 210 - 223.
- For shaft bearing seat diameters, see Link-Belt Spherical Roller Bearings Shaft & Housing Seat Diameters section on pages 266 - 269.
- Note: Dimensions subject to change. Certified dimensions of ordered material furnished on request.

PLB7900, PLB7900F, SAF22300

Interchange: *USAF 300, SAF22300*

Photo Shows a 2-Bolt Spherical Roller Bearing Two-Piece Pillow Block Unit

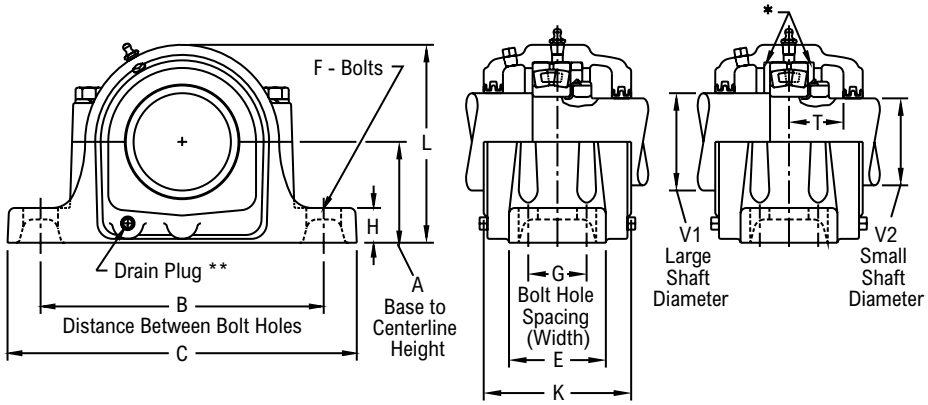

Fixed

Expansion

Product Features

- Corrosion-resistant powder coating
- Two piece cast iron housing
- Fixed or Expansion - up to 3/8 in expansion
- Matched base & cap
- Large reservoir for grease or oil storage
- Direct shaft mounted
- See Features and Benefits for additional info on pages 206 - 207.

Bearing Dimensions

Size Code	Shaft Diameter	V1 Large Shaft Diameter	V2 Small Shaft Diameter	Part Number	A Base to Centerline Height	B Min. Distance Between Bolt Holes	B Max. Distance Between Bolt Holes	G Bolt Hole Spacing (Width)	C	E	F Bolts	H	K	L	P	T	Approx. Weight
Two-Bolt Pillow Block																	
22309	1.77	2 1/8	1 11/16	PLB7945R	2 3/4	7 1/4	8	-	9 5/8	2 3/4	5/8	1	4 1/8	5 3/8	7 1/2	1 5/16	18.00
22310	1.97	2 3/8	1 7/8	PLB7950R	3	7 3/4	9	-	10 5/8	2 3/4	5/8	1 1/8	4 1/2	5 7/8	7 7/8	1 15/32	22.00
22311	2.17	2 9/16	2 1/16	PLB7955R	3 1/4	8 1/8	9 1/2	-	11	3 1/8	5/8	1 3/16	4 3/4	6 5/16	8 1/2	1 9/16	27.00
22313	2.56	3 1/16	2 7/16	PLB7965R	3 1/2	9 5/8	11	-	13	3 1/2	3/4	1 1/4	5 1/4	7	9 5/8	1 23/32	39.00
22315	2.95	3 7/16	2 13/16	PLB7975R	4	10 3/8	11 5/8	-	13 3/4	3 7/8	3/4	1 5/16	5 7/8	7 15/16	10 1/2	1 15/16	50.00
22316	3.15	3 5/8	3	PLB7980R	4 1/4	10 5/8	12 5/8	2 1/8	14 1/4	3 7/8	3/4	1 5/16	6 1/8	8 3/8	11 1/4	2	58.00
22317	3.35	3 15/16	3 3/16	PLB7985R	4 1/2	11 5/8	13 1/8	-	15 1/4	4 3/8	7/8	1 1/2	6 1/2	8 7/8	11 3/4	2 1/2	71.00
Four-Bolt Pillow Block																	
22313	2.56	3 1/16	2 7/16	PLB7965FR	3 1/2	9 5/8	11	2	13	3 1/2	5/8	1 1/4	5 1/4	7	9 5/8	1 23/32	39.00
22315	2.95	3 7/16	2 13/16	PLB7975FR	4	10 3/8	11 5/8	2 1/8	13 3/4	3 7/8	5/8	1 5/16	5 7/8	7 15/16	10 1/2	1 15/16	50.00
22316	3.15	3 5/8	3	PLB7980FR	4 1/4	10 5/8	12 5/8	2 1/8	14 1/4	3 7/8	5/8	1 5/16	6 1/8	8 3/8	11 1/4	2	58.00
22317	3.35	3 15/16	3 3/16	PLB7985FR	4 1/2	11 5/8	13 1/8	2 3/8	15 1/4	4 3/8	3/4	1 1/2	6 1/2	8 7/8	11 3/4	2 1/2	71.00
22318	3.54	4 1/8	3 3/8	SAF22318	4 3/4	12	13 1/2	2 1/4	15 1/2	4 3/8	3/4	2	6 7/8	9 3/16	12 1/4	2 7/32	94.00
22320	3.94	4 1/2	3 13/16	SAF22320	5 1/4	13 1/4	14 1/2	2 3/4	16 1/2	4 3/4	3/4	1 3/4	7 1/8	10 7/16	13 1/2	2 7/16	118.00
22322	4.33	4 7/8	4 3/16	SAF22322	6	14 5/8	16	3 1/4	18 3/8	5 1/8	7/8	1 7/8	7 3/4	11 11/16	14 1/2	2 21/32	147.00
22324	4.72	5 5/16	4 9/16	SAF22324	6 5/16	17	18 1/4	3 3/4	21 1/4	6 1/4	1	2 1/2	8 3/8	12 1/2	16	2 13/16	215.00
22326	5.12	5 7/8	4 15/16	SAF22326	6 11/16	17 3/8	19 1/4	3 3/4	22	6 1/4	1	2 5/8	8 3/4	13 5/16	17	3 5/16	215.00
22328	5.51	6 1/4	5 5/16	SAF22328	7 1/16	19 3/8	21 5/8	4 1/4	24 3/4	6 3/4	1	2 3/4	9 3/8	14 3/16	18	3 1/4	320.00
22330	5.91	6 5/8	5 3/4	SAF22330	7 1/2	20 7/8	23 5/8	4 5/8	26 3/4	7 1/8	1	3	9 3/4	14 7/8	18 3/4	3 7/16	350.00
22332	6.30	7	6 1/16	SAF22332	7 7/8	21 5/8	24 3/8	4 1/2	28	7 1/2	1 1/4	3 1/8	10 3/4	15 11/16	20 1/2	3 5/8	410.00
22334	6.69	7 7/16	6 7/16	SAF22334	8 1/4	22 1/2	25	5	29 1/2	8	1 1/4	3 3/8	11 1/4	16 1/2	22 1/4	3 3/4	485.00
22348	9.45	10 1/2	9 1/16	PLB22348	12	32 3/4	33 1/2	9	38 1/4	14 3/4	1 5/8	3 1/2	15 1/2	24	-	-	1,322.00
22356	11.02	12 3/4	10 3/4	PLB22356	14	36 3/4	38 1/4	10 3/4	43 3/4	18 1/4	2	5	18	28	-	-	2,203.00

Additional Notes

- Please call 1-866-REXNORD for availability
- Lubrication fitting tap size: for 3.1496 in *(80 mm)* and smaller shaft sizes, 1/8 in PT: for all other shaft sizes, 1/4 in PT
- Expansion - is 3/8 in for all shaft sizes
- Drain plug tap size - for 3.1496 in *(80 mm)* and smaller shaft sizes, 1/8 in PT: for 3.3465 in *(85 mm)* thru 4.3307 in *(110 mm)*, 1/4 in PT: for 4.7244 in *(120 mm)* thru 6.2992 in *(160 mm)*, 3/8 in PT: for all other shaft sizes, 1/2 in PT
- Minimum extension of shaft beyond locknut, .06 in for closed end unit
- Dimension "P" is recommended dimension for cap removal
- Multi-labyrinth seals standard
- SAF pillow blocks include locknut and washer
- For the Selection Guide, Load Ratings and Speed Limits, see the Link-Belt Split Housed Spherical Roller Bearings Engineering section on pages 210 - 223.
- For shaft bearing seat diameters, see Link-Belt Spherical Roller Bearings Shaft & Housing Seat Diameters section on pages 266 - 269.
- Note: Dimensions subject to change. Certified dimensions of ordered material furnished on request.

PLB23000K

Interchange: *USAF 500, USDAF, S(D)AF23000KA, S(D)AF23000K*

Photo Shows a 2-Bolt Spherical Roller Bearing
Two-Piece Pillow Block Unit

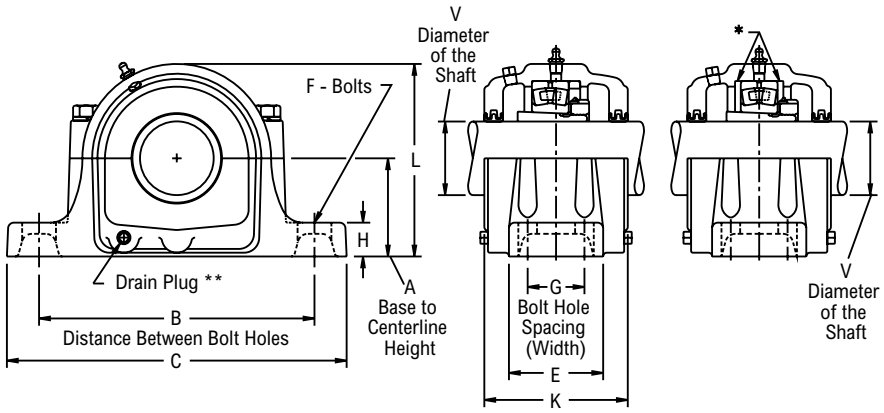

Product Features

- Corrosion-resistant powder coating
- Two piece cast iron housing
- Broad range of sealing options
- Fixed or Expansion - up to 3/8 in expansion
- Matched base & cap
- Large reservoir for grease or oil storage
- Tapered adapter mounted
- See Features and Benefits for additional info on pages 206 - 207.

Bearing Dimensions

Size Code	Shaft Diameter	Part Number	A Base to Centerline Height	B Min. Distance Between Bolt Holes	B Max. Distance Between Bolt Holes	G Bolt Hole Spacing (Width)	C	E	F Bolts	H	K	L	Approx. Weight
Four-Bolt Pillow Block													
23044	7 15/16	PLB23044K71516	7 7/8	21 5/8	24 3/8	4 1/2	28	7 1/2	1 1/4	3 1/8	10 3/4	15 11/16	413.00
	8	PLB23044K8											
23048	8 1/2	PLB23048K812	8 1/4	22 1/2	25	5	29 1/2	8	1 1/4	3 3/8	11 1/8	16 11/16	474.00
	8 15/16	PLB23048K81516											
	9	PLB23048K9											
23052	9 7/16	PLB23052K9716	9 1/2	24 3/4	27 7/8	5 1/4	32 3/4	8 3/4	1 1/2	3 3/4	11 7/8	18 13/16	530.00
	9 1/2	PLB23052K912											
23056	9 15/16	PLB23056K91516	9 7/8	26 1/4	29 1/2	5 1/2	34 1/4	9	1 1/2	4	12 1/16	20 3/16	800.00
	10	PLB23056K10											
	10 7/16	PLB23056K10716											
23060	10 15/16	PLB23060K101516	12	32 3/4	33 1/2	9	38 1/4	14 3/4	1 5/8	3 1/2	15 1/2	24	1,200.00
	11	PLB23060K11											
23064	11 15/16	PLB23064K111516	12	32 3/4	33 1/2	9	38 1/4	15 1/8	1 5/8	3 1/2	16 1/2	24	1,250.00
	12	PLB23064K12											
23068	12 1/2	PLB23068K1212	12	32	33 1/2	10	39	15 1/4	1 7/8	4 3/16	15 3/4	24	1,550.00
23072	12 15/16	PLB23072K121516	12 13/16	35	36 1/2	10 1/2	41 3/4	15 3/4	1 7/8	4 1/2	16 1/4	26	1,650.00
	13	PLB23072K13											
23076	13 15/16	PLB23076K131516	12 13/16	35	36 1/2	10 1/2	41 3/4	15 3/4	1 7/8	4 1/2	16 1/4	26	1,700.00
	14	PLB23076K14											3,245.00
23080	15	PLB23080K15	14 1/2	39 1/4	40 3/4	11	46	17 1/8	2	5	18	28 3/4	2,300.00
23084	15 3/4	PLB23084K1534	14 1/2	39 1/4	40 3/4	11	46	17 1/8	2	5	18	28 3/4	2,300.00
23088	16 1/2	PLB23088K1612	15 1/2	41 1/2	43 1/2	12 1/4	48 3/4	18 3/4	2 1/4	5 1/2	19 3/8	31	2,550.00
23092	17	PLB23092K17	15 1/2	41 1/2	43 1/2	12 1/4	48 3/4	18 3/4	2 1/4	5 1/2	19 3/8	31	2,850.00
23096	18	PLB23096K18	17	44 1/2	46 5/8	14 1/2	52 3/4	22 1/4	2 1/4	5 1/2	21 3/4	34	4,250.00
230530	19 1/2	PLB230530K1912	18	47 1/8	48 7/8	15	54 1/4	21 5/8	2 1/2	5 3/4	22 3/4	35 3/4	5,200.00
230560	21	PLB230560K21	18	47 1/8	48 7/8	15	54 1/4	21 5/8	2 1/2	5 3/4	22 3/4	35 3/4	3,745.00
230600	22	PLB230600K22	20	52 1/2	54	16	60	22	3	6	24 5/8	40	5,525.00
230630	24	PLB230630K24	20	52 1/2	54	16	60	22	3	6	24 5/8	40	5,356.00

Additional Notes

- Please Call 1-866-REXNORD for availability
- Lubrication Fitting Tap Size, 1/4 in PT
- Expansion is 3/8 in for all shaft sizes
- Multi-labyrinth seals standard
- For the Selection Guide, Load Ratings and Speed Limits, see the Link-Belt Split Housed Spherical Roller Bearings Engineering section on pages 210 - 223.
- Note: Dimensions subject to change. Certified dimensions of ordered material furnished on request.

PLB23100K

Interchange: *USDAF, SDAF23100KA, SDAF23100K*

Two-Piece Pillow Block Unit

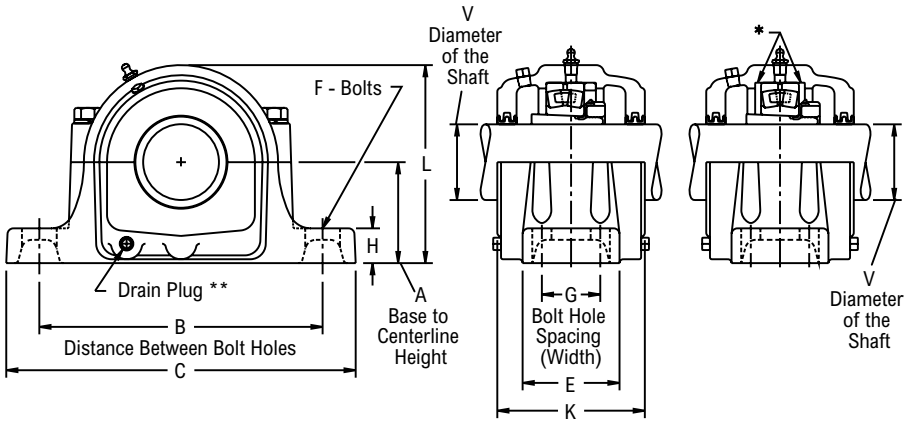

Product Features

- Corrosion-resistant powder coating
- Two piece cast iron housing
- Broad range of sealing options
- Fixed or Expansion - up to 3/8 in expansion
- Matched base & cap
- Large reservoir for grease or oil storage
- Tapered adapter mounted
- See Features and Benefits for additional info on pages 206 - 207.

Bearing Dimensions

Size Code	Shaft Diameter	Part Number	A Base to Centerline Height	B Min. Distance Between Bolt Holes	B Max. Distance Between Bolt Holes	G Bolt Hole Spacing (Width)	C	E	F Bolts	H	K	L	Approx. Weight
Four-Bolt Pillow Block													
23144	8	PLB23144K8	8 1/4	22 1/2	25	5	29 1/2	8	1 1/4	3 3/8	12 1/8	16 1/2	496.00
23148	8 15/16	PLB23148K81516	9 1/2	24 3/4	27 7/8	5 1/4	32 3/4	8 3/4	1 1/2	3 3/4	13 1/2	18 5/8	820.00
23152	9 7/16	PLB23152K9716	10 1/4	29	30 1/2	8 3/4	35	14 1/2	1 5/8	3 3/4	14 1/8	20 1/2	1,029.00
23156	10 7/16	PLB23156K10716	12	32 3/4	33 1/2	9	38 1/4	14 3/4	1 5/8	3 1/2	15 1/2	24	1,253.00
23160	10 15/16	PLB23160K101516	12	32 3/4	33 1/2	9	38 1/4	15 1/8	1 5/8	3 1/2	16 1/2	24	1,333.00
23164	11 15/16	PLB23164K111516	12 13/16	35	36 1/2	10 1/2	41 3/4	15 3/4	1 7/8	4 1/2	16 1/4	26	1,768.00
23168	12 7/16	PLB23168K12716	14	36 3/4	38 1/4	10 3/4	43 3/4	18 1/4	2	5	18	28	2,265.00
23172	13 7/16	PLB23172K13716	14 1/2	39 1/4	40 3/4	11	46	17 1/8	2	5	18	28 3/4	2,442.00
23176	13 15/16	PLB23176K131516	14 1/2	39 1/4	40 3/4	11	46	17 1/8	2	5	18	28 3/4	2,473.00
23180	15	PLB23180K15	15 1/2	41 1/2	43 1/2	12 1/4	48 3/4	18 3/4	2 1/4	5 1/2	19 3/8	31	3,119.00
23184	15 3/4	PLB23184K1534	17	44 1/2	46 5/8	14 1/2	52 3/4	22 1/4	2 1/4	5 1/2	21 3/4	34	4,039.00
23188	16 1/2	PLB23188K1612	17	44 1/2	46 5/8	14 1/2	52 3/4	22 1/4	2 1/4	5 1/2	21 3/4	34	4,003.00
23192	17	PLB23192K17	18	47 1/8	48 7/8	15	54 1/4	21 5/8	2 1/2	5 3/4	22 3/4	35 3/4	4,600.00
23196	18	PLB23196K18	18	47 1/8	48 7/8	15	54 1/4	21 5/8	2 1/2	5 3/4	22 3/4	35 3/4	4,707.00
231530	19 1/2	PLB231530K1912	20	52 1/2	54	16	60	22	3	6	24 5/8	40	6,002.00
231560	21	PLB231560K21	20	52 1/2	54	16	60	22	3	6	24 5/8	40	5,881.00

Additional Notes

- Please Call 1-866-REXNORD for availability
- Lubrication Fitting Tap Size, 1/4 in PT
- Expansion is 3/8 in for all shaft sizes
- Multi-labyrinth seals standard
- For the Selection Guide, Load Ratings and Speed Limits, see the Link-Belt Split Housed Spherical Roller Bearings Engineering section on pages 210 - 223.
- Note: Dimensions subject to change. Certified dimensions of ordered material furnished on request.

PLB23100

Interchange: *USDAF, SDAF23100*

Photo Shows a 2-Bolt Spherical Roller Bearing Two-Piece Pillow Block Unit

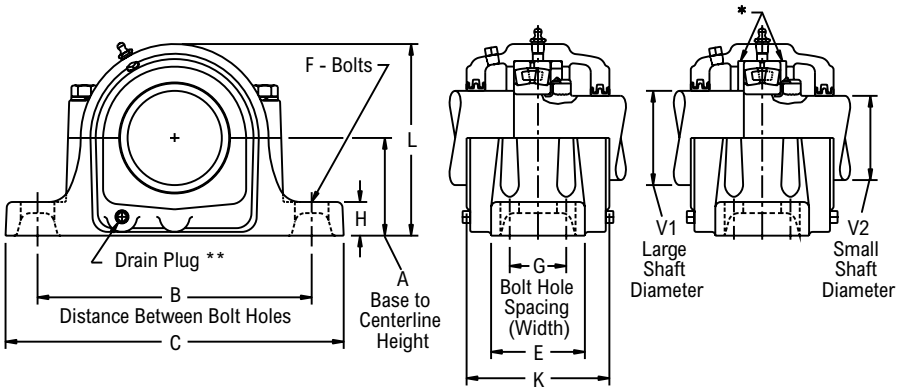

Fixed Expansion

Product Features

- Corrosion-resistant powder coating
- Two piece cast iron housing
- Fixed or Expansion - up to 3/8 in expansion
- Matched base & cap
- Large reservoir for grease or oil storage
- Direct shaft mounted
- See Features and Benefits for additional info on pages 206 - 207.

Bearing Dimensions

Size Code	Shaft Diameter	V1 Large Shaft Diameter	V2 Small Shaft Diameter	Part Number	A Base to Centerline Height	B Min. Distance Between Bolt Holes	B Max. Distance Between Bolt Holes	G Bolt Hole Spacing (Width)	C	E	F Bolts	H	K	L	Approx. Weight
Four-Bolt Pillow Block															
23152	10.24	11 1/2	9 15/16	PLB23152	10 1/4	29	30 1/2	8 3/4	35	14 1/2	1 5/8	3 3/4	14 1/8	20 1/2	985.00
23156	11.02	12 1/2	10 3/4	PLB23156	12	32 3/4	33 1/2	9	38 1/4	14 3/4	1 5/8	3 1/2	15 1/2	24	1,206.00
23160	11.81	13	11 1/2	PLB23160	12	32 3/4	33 1/2	9	38 1/4	15 1/8	1 5/8	3 1/2	16 1/2	24	1,305.00
23164	12.60	14	12 1/4	PLB23164	12 13/16	35	36 1/2	10 1/2	41 3/4	15 3/4	1 7/8	4 1/2	16 1/4	26	1,504.00
23168	13.39	15	13	PLB23168	14	36 3/4	38 1/4	10 3/4	43 3/4	18 1/4	2	5	18	28	2,172.00
23172	14.17	16	13 3/4	PLB23172	14 1/2	39 1/4	40 3/4	11	46	17 1/8	2	5	18	28 3/4	2,322.00
23176	14.96	17	14 1/2	PLB23176	14 1/2	39 1/4	40 3/4	11	46	17 1/8	2	5	18	28 3/4	2,348.00
23180	15.75	17 1/2	15 1/4	PLB23180	15 1/2	41 1/2	43 1/2	12 1/4	48 3/4	18 3/4	2 1/4	5 1/2	19 3/8	31	2,979.00
23184	16.54	18 1/2	15 3/4	PLB23184	17	44 1/2	46 5/8	14 1/2	52 3/4	22 1/4	2 1/4	5 1/2	21 3/4	34	3,894.00
23188	17.32	19 1/2	17	PLB23188	17	44 1/2	46 5/8	14 1/2	52 3/4	22 1/4	2 1/4	5 1/2	21 3/4	34	3,852.00
23192	18.11	20	17 3/4	PLB23192	18	47 1/8	48 7/8	15	54 1/4	21 5/8	2 1/2	5 3/4	22 3/4	35 3/4	4,391.00

Additional Notes

- Please Call 1-866-REXNORD for availability
- Lubrication Fitting Tap Size, 1/4 in PT
- Expansion is 3/8 in for all shaft sizes
- Multi-labyrinth seals standard
- For the Selection Guide, Load Ratings and Speed Limits, see the Link-Belt Split Housed Spherical Roller Bearings Engineering section on pages 210 - 223.
- Note: Dimensions subject to change. Certified dimensions of ordered material furnished on request.

PLB23200K

Interchange: *USDAF, SDAF23200KA, SDAF23200K*

Photo Shows a 2-Bolt Spherical Roller Bearing Two-Piece Pillow Block Unit

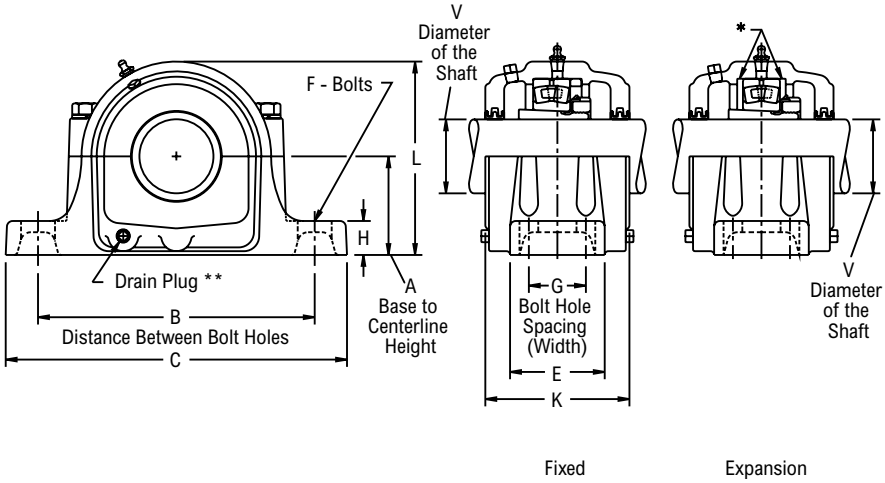

Product Features

- Corrosion-resistant powder coating
- Two piece cast iron housing
- Broad range of sealing options
- Fixed or Expansion - up to 3/8 in expansion
- Matched base & cap
- Large reservoir for grease or oil storage
- Tapered adapter mounted
- See Features and Benefits for additional info on pages 206 - 207.

Bearing Dimensions

Size Code	Shaft Diameter	Part Number	A Base to Centerline Height	B Min. Distance Between Bolt Holes	B Max. Distance Between Bolt Holes	G Bolt Hole Spacing (Width)	C	E	F Bolts	H	K	L	Approx. Weight
Four-Bolt Pillow Block													
23244	8	PLB23244K8	9 1/2	24 3/4	27 7/8	5 1/4	32 3/4	8 3/4	1 1/2	3 3/4	13 1/8	18 5/8	712.00
23248	8 15/16	PLB23248K81516	10 1/4	29	30 1/2	8 3/4	35	14 1/2	1 5/8	3 3/4	14 1/8	20 1/2	1,080.00
23252	9 7/16	PLB23252K9716	12	32 3/4	33 1/2	9	38 1/4	15 1/8	1 5/8	3 1/2	16 1/2	24	1,301.00
23256	10 7/16	PLB23256K10716	12	32 3/4	33 1/2	9	38 1/4	15 1/8	1 5/8	3 1/2	16 1/2	24	1,400.00
23260	10 15/16	PLB23260K101516	12 13/16	35	36 1/2	10 1/2	41 3/4	15 3/4	1 7/8	4 1/2	16 1/4	26	1,822.00
23264	11 15/16	PLB23264K111516	14	36 3/4	38 1/4	10 3/4	43 3/4	18 1/4	2	5	18	28	2,173.00
23268	12 7/16	PLB23268K12716	14 1/2	39 1/4	40 3/4	11	46	17 1/8	2	5	18	28 3/4	2,582.00
23272	13 7/16	PLB23272K13716	15 1/2	41 1/2	43 1/2	12 1/4	48 3/4	18 3/4	2 1/4	5 1/2	19 3/8	31	3,278.00
23276	13 15/16	PLB23276K131516	15 1/2	41 1/2	43 1/2	12 1/4	48 3/4	18 3/4	2 1/4	5 1/2	19 3/8	31	3,245.00
23280	15	PLB23280K15	17	44 1/2	46 5/8	14 1/2	52 3/4	22 1/4	2 1/4	5 1/2	21 3/4	34	4,297.00
23284	15 3/4	PLB23284K1534	18	47 1/8	48 7/8	15	54 1/4	21 5/8	2 1/2	5 3/4	22 3/4	35 3/4	4,800.00
23288	16 1/2	PLB23288K1612	18	47 1/8	48 7/8	15	54 1/4	21 5/8	2 1/2	5 3/4	22 3/4	35 3/4	4,798.00
23292	17	PLB23292K17	18	47 1/8	48 7/8	15	54 1/4	21 5/8	2 1/2	5 3/4	22 3/4	35 3/4	4,461.00
23296	18	PLB23296K18	20	52 1/2	54	16	60	22	3	6	24 5/8	40	6,362.00

Additional Notes

- Please Call 1-866-REXNORD for availability
- Lubrication Fitting Tap Size, 1/4 in PT
- Expansion is 3/8 in for all shaft sizes
- Multi-labyrinth seals standard
- For the Selection Guide, Load Ratings and Speed Limits, see the Link-Belt Split Housed Spherical Roller Bearings Engineering section on pages 210 - 223.
- Note: Dimensions subject to change. Certified dimensions of ordered material furnished on request.

PLB23200

Interchange: *USDAF, SDAF23200*

Photo Shows a 2-Bolt Spherical Roller Bearing Two-Piece Pillow Block Unit

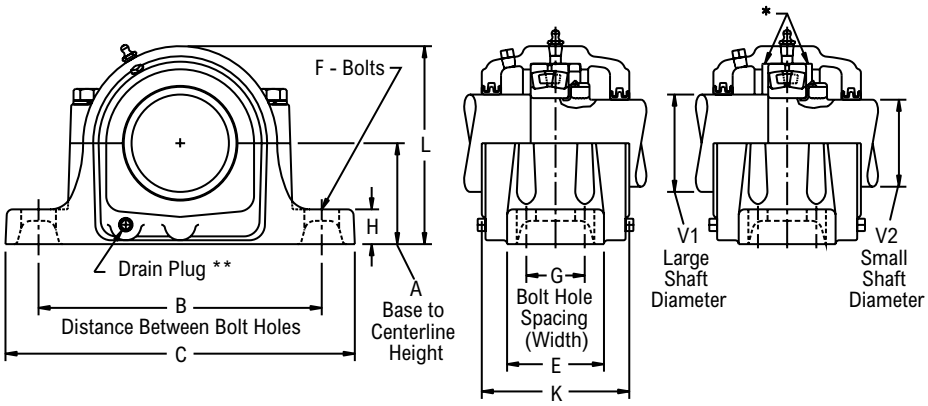

Fixed Expansion

Product Features

- Corrosion-resistant powder coating
- Two piece cast iron housing
- Fixed or Expansion - up to 3/8 in expansion
- Matched base & cap
- Large reservoir for grease or oil storage
- Direct shaft mounted
- See Features and Benefits for additional info on pages 206 - 207.

Bearing Dimensions

Size Code	Shaft Diameter	V1 Large Shaft Diameter	V2 Small Shaft Diameter	Part Number	A Base to Centerline Height	B Min. Distance Between Bolt Holes	B Max. Distance Between Bolt Holes	G Bolt Hole Spacing (Width)	C	E	F Bolts	H	K	L	Approx. Weight
Four-Bolt Pillow Block															
23248	9.45	10 1/2	9 3/16	PLB23248	10 1/4	29	30 1/2	8 3/4	35	14 1/2	1 5/8	3 3/4	14 1/8	20 1/2	1,032.00
23252	10.24	11 1/2	9 15/16	PLB23252	12	32 3/4	33 1/2	9	38 1/4	15 1/8	1 5/8	3 1/2	16 1/2	24	1,247.00
23256	11.02	12 1/2	10 3/4	PLB23256	12	32 3/4	33 1/2	9	38 1/4	15 1/8	1 5/8	3 1/2	16 1/2	24	1,400.00
23260	11.81	13	11 1/2	PLB23260	12 13/16	35	36 1/2	10 1/2	41 3/4	15 3/4	1 7/8	4 1/2	16 1/4	26	1,754.00
23264	12.60	14	12 1/4	PLB23264	14	36 3/4	38 1/4	10 3/4	43 3/4	18 1/4	2	5	18	28	2,243.00
23268	13.39	15	13	PLB23268	14 1/2	39 1/4	40 3/4	11	46	17 1/8	2	5	18	28 3/4	2,492.00
23272	14.17	16	13 3/4	PLB23272	15 1/2	41 1/2	43 1/2	12 1/4	48 3/4	18 3/4	2 1/4	5 1/2	19 3/8	31	3,143.00
23276	14.96	17	14 1/2	PLB23276	15 1/2	41 1/2	43 1/2	12 1/4	48 3/4	18 3/4	2 1/4	5 1/2	19 3/8	31	3,100.00
23280	15.75	17 1/2	15 1/4	PLB23280	17	44 1/2	46 5/8	14 1/2	52 3/4	22 1/4	2 1/4	5 1/2	21 3/4	34	4,132.00
23284	16.54	18 1/2	15 3/4	PLB23284	18	47 1/8	48 7/8	15	54 1/4	21 5/8	2 1/2	5 3/4	22 3/4	35 3/4	4,636.00
23288	17.32	19 1/2	17	PLB23288	18	47 1/8	48 7/8	15	54 1/4	21 5/8	2 1/2	5 3/4	22 3/4	35 3/4	4,608.00
23292	18.11	20	17 3/4	PLB23292	18	47 1/8	48 7/8	15	54 1/4	21 5/8	2 1/2	5 3/4	22 3/4	35 3/4	4,461.00

Additional Notes

- Please Call 1-866-REXNORD for availability
- Lubrication Fitting Tap Size, 1/4 in PT
- Expansion is 3/8 in for all shaft sizes
- Multi-labyrinth seals standard
- For the Selection Guide, Load Ratings and Speed Limits, see the Link-Belt Split Housed Spherical Roller Bearings Engineering section on pages 210 - 223.
- Note: Dimensions subject to change. Certified dimensions of ordered material furnished on request.

DSLB6800

Photo Shows a Hinged Top, Welded Steel Conveyor Take-Up Frame with Spherical Roller Bearing Take-Up Unit

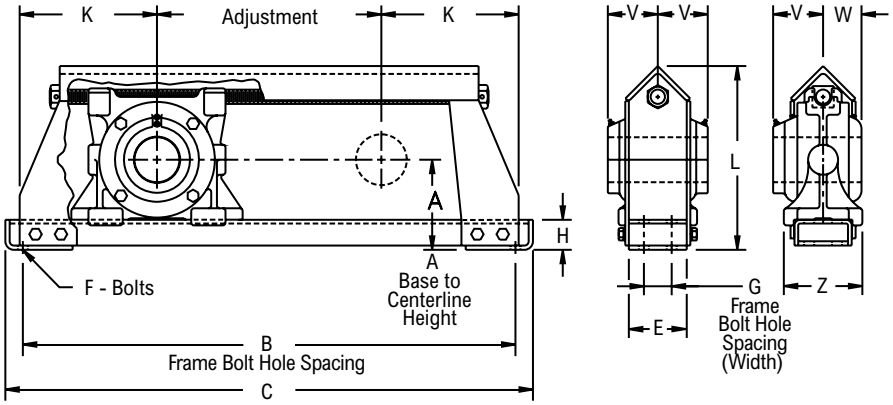

Product Features

- Protected screw type frame
- Corrosion-resistant powder coating
- Cast iron housing
- Independently flushable D8 seals
- Tapered adapter mounted
- See Features and Benefits for additional info on pages 206 - 207.

Bearing Dimensions

Size Code	Shaft Diameter	Adjust.	Part Number	A Base to Centerline Height	B Frame Bolt Hole Spacing	G Frame Bolt Hole Spacing (Width)	C	E	F Bolts	H	K	L	V	W	Z	Approx. Weight
22215	2 7/16	12	DSLB683912	5 1/8	30 1/2	2	32 1/2	4	5/8	2	9 1/4	10 7/8	3 15/32	2 19/32	5 5/8	94.00
		18	DSLB683918		36 1/2		38 1/2									103.00
		24	DSLB683924		42 1/2		44 1/2									111.00
		30	DSLB683930		48 1/2		50 1/2									119.00
22217	2 15/16	12	DSLB684712	5 5/8	32	2	34 1/4	4	3/4	2	10	11 13/16	3 1/2	2 5/8	5 5/8	120.00
		18	DSLB684718		38		40 1/4									130.00
		24	DSLB684724		44		46 1/4									145.00
		30	DSLB684730		50		52 1/4									155.00
22220	3 7/16	12	DSLB685512	7	36	2 1/2	38 1/2	5	3/4	2 1/4	12	14 11/16	4 1/8	3 1/4	6 7/8	206.00
		18	DSLB685518		42		44 1/2									218.00
		24	DSLB685524		48		50 1/2									230.00
		30	DSLB685530		54		56 1/2									242.00
22222	3 15/16	12	DSLB686312	7 1/2	36	2 1/2	38 1/2	5	3/4	2 1/4	12	15 11/16	4 3/8	3 1/2	6 7/8	255.00
		18	DSLB686318		42		44 1/2									270.00
		24	DSLB686324		48		50 1/2									285.00
		30	DSLB686330		54		56 1/2									300.00
22226	4 7/16	18	DSLB687118	10	47	3	50 1/2	6	7/8	4	14 1/2	20 1/4	4 7/8	3 3/4	7 7/8	414.00
		24	DSLB687124		53		56 1/2									432.00
		30	DSLB687130		59		62 1/2									450.00
22228	4 15/16	18	DSLB687918	10 1/2	49	3	52 1/2	6	1	4	15 1/2	21 1/8	4 3/4	3 27/32	7 7/8	475.00
		24	DSLB687924		55		58 1/2									494.00
		30	DSLB687930		61		64 1/2									515.00
22234	5 15/16	18	DSLB689518	12 1/8	55 7/8	3 3/4	60 1/4	7 1/2	1 1/4	4	18 15/16	25 1/2	5 33/64	4 1/2	9 7/8	708.00
		24	DSLB689524		61 7/8		66 1/4									726.00
		30	DSLB689530		67 7/8		72 1/4									746.00
		42	DSLB689542		79 7/8		84 1/4									784.00

Additional Notes

- Please call 1-866-REXNORD for availability
- Expansion - is 3/8 in for all shaft sizes
- For shaft sizes 2 7/16 in thru 2 15/16 in, frame has removable top construction
- Frames with adjustment of 18" or more have center supporting pad welded to bottom of frame
- Taconite seals standard
- For the Selection Guide, Load Ratings and Speed Limits, see the Link-Belt Split Housed Spherical Roller Bearings Engineering section on pages 210 - 223.
- Note: Dimensions subject to change. Certified dimensions of ordered material furnished on request.

PLB6600, PLB6800,PLB66M00, PLB68M00 Spherical Roller Bearing Unit Replacement Parts

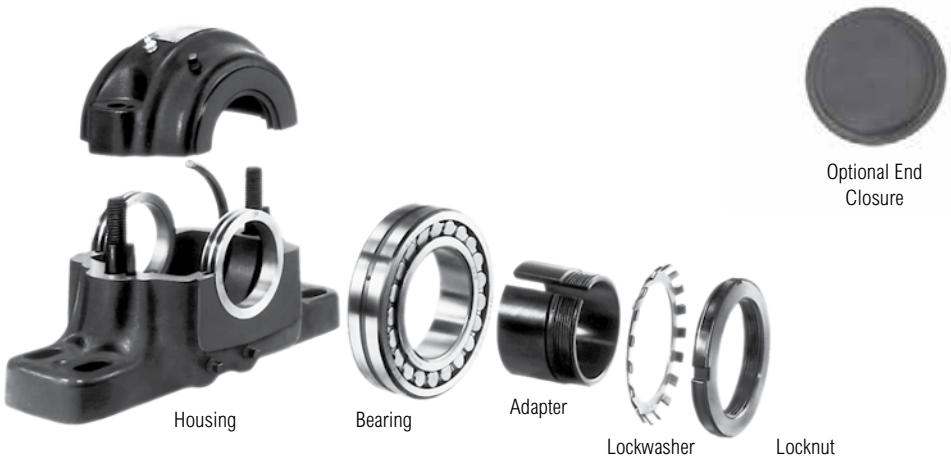

Shaft Diameter	Pillow Block	Spherical Roller Bearing	Labyrinth Seal	Adapter Assembly	C-Spacer Ring	End Closure	2-Bolt Cast Iron Adapter Housing	4-Bolt Cast Iron Adapter Housing
	Part Number	Part Number	Part Number	Part Number	Part Number	Part Number	Part Number	Part Number
1 7/16	PLB6823R	22209LBKC3	LB69233R	H309023	68244	LB69246R	PLB6823R02	-
1 1/2	PLB6824R	22209LBKC3	LB69243R	H309024	68244	LB69246R	PLB6824R02	-
1 11/16	PLB6827R	22210LBKC3	LB69273R	H310027	68284	LB69286R	PLB6827R02	-
1 3/4	PLB6828R	22210LBKC3	LB69283R	H310028	68284	LB69286R	PLB6828R02	-
1 15/16	PLB6831R	22211LBKC3	LB69313RA	H311031	69244	LB69326R	PLB6831R02	-
2	PLB6832R	22211LBKC3	LB69323R	H311032	69244	LB69326R	PLB6832R02	-
2 3/16	PLB6835R	22213LBKC3	LB69353RA	H313035	69324	LB69366R	PLB6835R02	-
2 7/16	PLB6839R*	22215LBKC3	LB68393RA	H315039	68404	LB68406R	PLB6839R02	-
2 11/16	PLB6843R*	22216LBKC3	LB68433RA	H316043	68444	LB68446R	PLB6843R02	-
2 15/16	PLB6847R*	22217LBKC3	LB68473RA	H317047	68484	LB68486R	PLB6847R02	-
3	PLB6848R*	22217LBKC3	LB68483R	H317048	68484	LB68486R	PLB6848R02	-
3 3/16	PLB6851R*	22218LBKC3	LB68513R	H318051	68524	LB68526R	PLB6851R02	-
3 7/16	PLB6855R*	22220LBKC3	LB68553RA	H320055	68564	LB68566R	PLB6855R02	-
3 1/2	PLB6856R*	22220LBKC3	LB68563R	H320056	68564	LB68566R	PLB6856R02	-
3 11/16	PLB6859FR	22222LBKC3	LB68593R	H322059	68644	LB68646R	-	PLB6859FR02
3 15/16	PLB6863FR	22222LBKC3	LB68633RA	H322063	68644	LB68646R	-	PLB6863FR02
4	PLB6864FR	22222LBKC3	LB68643R	H322064	68644	LB68646R	-	PLB6864FR02
4 3/16	PLB6867FR	22224LBKC3	LB68673R	H3124067	68684	LB68686R	-	PLB6867FR02
4 7/16	PLB6871FR	22226LBKC3	LB68713RA	H3126071	68724	LB68726R	-	PLB6871FR02
4 1/2	PLB6872FR	22226LBKC3	LB68723R	H3126072	68724	LB68726R	-	PLB6872FR02
4 15/16	PLB6879FR	22228LBKC3	LB68793R	H3128079	68804	LB68806R	-	PLB6879FR02
5	PLB6880FR	22228LBKC3	LB68803R	H3128080	68804	LB68806R	-	PLB6880FR02
5 3/16	PLB6883FR	22230LBKC3	LB68833R	H3130083	68844	LB68846R	-	PLB6883FR02
5 7/16	PLB6887FR	22232LBKC3	LB68873R	H3132087	68924	LB68886R	-	PLB6887FR02
5 15/16	PLB6895FR	22234LBKC3	LB68953R	H3134095	68964	LB68966R	-	PLB6895FR02
6	PLB6896FR	22234LBKC3	LB68963R	H3134096	68964	LB68966R	-	PLB6896FR02
6 7/16	PLB68103FR	22236LBKC3	LB681033R	H3136103	681044	LB681046R	-	PLB68103FR02
6 1/2	PLB68104FR	22236LBKC3	LB681043R	H3136104	681044	LB681046R	-	PLB68104FR02
6 15/16	PLB68111FR	22238LBKC3	LB681113R	H3138111	681124	LB681126R	-	PLB68111FR02
7	PLB68112FR	22238LBKC3	LB681123R	H3138112	681124	LB681126R	-	PLB68112FR02
7 3/16	PLB68115FR	22240LBKC3	LB681153R	H3140115	681164	LB681166R	-	PLB68115FR02
7 1/2	PLB68120FR	22244LBKC3	LB681203R	H3144120	681284	LB681286R	-	PLB68120FR02
7 15/16	PLB68127FR	22244LBKC3	LB681273R	H3144127	681284	LB681286R	-	PLB68127FR02
8	PLB68128FR	22244LBKC3	LB681283R	SNW448	681284	LB681286R	-	PLB68128FR02

Continued...

Continued...

Bearing Dimensions

Shaft Diameter	Pillow Block	SpRerical Roller Bearing	LabyrintR Seal	Adapter Assembly	C-Spacer Ring	End Closure	2-Bolt Cast Iron Adapter Rousing	4-Bolt Cast Iron Adapter Rousing
	Part Number	Part Number	Part Number	Part Number	Part Number	Part Number	Part Number	Part Number
8 7/16	PLB66135FR	23048LBKC3	LB661353R	SNP30488716	661444	LB661446	-	PLB66135FR02
8 1/2	PLB66136FR	23048LBKC3	LB661363R	SNP3048812	661444	LB661446	-	PLB66136FR02
9	PLB66144FR	23048LBKC3	LB661443R	SNP30489	661444	LB661446	-	PLB66144FR02
9 7/16	PLB66B151FR	23056LBKC3	LB66B1513R	SNP30569716	661684	LB661686	-	PLB66B151FR02
9 1/2	PLB66B152FR	23056LBKC3	LB66B1523R	SNP3056912	661684	LB661686	-	PLB66B152FR02
9 15/16	PLB66159FR	23056LBKC3	LB661593R	SNP305691516	661684	LB661686	-	PLB66159FR02
10	PLB66160FR	23056LBKC3	LB661603R	SNP305610	661684	LB661686	-	PLB66160FR02
10 7/16	PLB66167FR	23056LBKC3	LB661673R	SNP305610716	661684	LB661686	-	PLB66167FR02
10 1/2	PLB66168FR	23056LBKC3	LB661683R	SNP30561012	661684	LB661686	-	PLB66168FR02
40.00	PLB68M40R	22209LBKC3	LB69M403R	H309	68244	LB69246R	PLB68M40R02	-
45.00	PLB68M45R	22210LBKC3	LB69M453R	H310	68284	LB69286R	PLB68M45R02	-
50.00	PLB68M50R	22211LBKC3	LB69M503R	H311	69244	LB69326R	PLB68M50R02	-
60.00	PLB68M60R	22213LBKC3	LB69M603R	H313	69324	LB69M606R	PLB68M60R02	-
65.00	PLB68M65R*	22215LBKC3	LB68M653R	H315	68404	LB68M656R	PLB68M65R02	-
70.00	PLB68M70R*	22216LBKC3	LB68M703R	H316	68444	LB68446R	PLB68M70R02	-
75.00	PLB68M75R*	22217LBKC3	LB68M753R	H317	68484	LB68486R	PLB68M75R02	-
80.00	PLB68M80R*	22218LBKC3	LB68M803R	H318	68524	LB68526R	PLB68M80R02	-
90.00	PLB68M90R*	22220LBKC3	LB68M903R	H320	68564	LB68566R	PLB68M90R02	-
100.00	PLB68M100FR	22222LBKC3	LB68633R	H322	68644	LB68646R		PLB68M100FR02
110.00	PLB68M110FR	22224LBKC3	LB68M1103R	H3124	68684	LB68686R	-	PLB68M110FR02
115.00	PLB68M115FR	22226LBKC3	LB68M1153R	H3126	68724	LB68726R	-	PLB68M115FR02
125.00	PLB68M125FR	22228LBKC3	LB68M1253R	H3128	68804	LB68806R	-	PLB68M125FR02
135.00	PLB68M135FR	22230LBKC3	LB68M1353R	H3130	68844	LB68846R	-	PLB68M135FR02
140.00	PLB68M140FR	22232LBKC3	LB68M1403R	H3132	68924	LB68886R	-	PLB68M140FR02
150.00	PLB68M150FR	22234LBKC3	LB68M1503R	H3134	68964	LB68966R	-	PLB68M150FR02
160.00	PLB68M160FR	22236LBKC3	LB68M1603R	H3136	681044	LB681046R	-	PLB68M160FR02
170.00	PLB68M170FR	22238LBKC3	LB68M1703R	H3138	681124	LB681126R	-	PLB68M170FR02
180.00	PLB68M180FR	22240LBKC3	LB68M1803R	H3140	681164	LB681166R	-	PLB68M180FR02
200.00	PLB68M200FR	22244LBKC3	LB68M2003R	H3144	681284	LB681286R	-	PLB68M200FR02
220.00	PLB66M220FR	23048LBKC3	LB66M2203R	H3048	661444	LB661446	-	PLB66M220FR02
260.00	PLB66M260FR	23056LBKC3	LB66M2603R	H3056	661684	LB661686	-	PLB66M260FR02

Additional Notes

*2-bolt base listed. For 4-bolt base add suffix F; i.e. PLB6839FR Pillow Block or PLB6839FR02 housing.

Housing part numbers listed above include seals and C-Spacer ring.

PLB6600D8, PLB6800D8 Spherical Roller Bearing Unit Replacement Parts

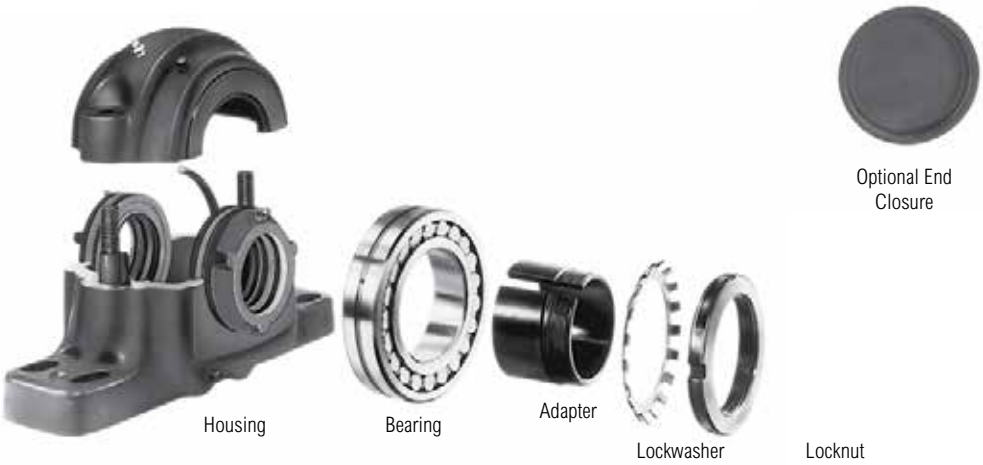

Bearing Dimensions

Shaft Diameter	Pillow Block	Spherical Roller Bearing	D8 Seal	Adapter Assembly	C-Spacer	End Closure	2-Bolt Cast Iron Adapter Mounted Housing	4-Bolt Cast Iron Adapter Mounted Housing
	Part Number	Part Number	Part Number	Part Number	Part Number	Part Number	Part Number	Part Number
1 7/16	PLB6823D8	22209LBKC3	LB6923D8	H309023	68244	LB6924D86	PLB6823D802	-
1 1/2	PLB6824D8	22209LBKC3	LB6924D8	H309024	68244	LB6924D86	PLB6824D802	-
1 11/16	PLB6827D8	22210LBKC3	LB6927D8	H310027	68284	LB6928D86	PLB6827D802	-
1 15/16	PLB6831D8	22211LBKC3	LB6931D8	H311031	69244	LB6932D86	PLB6831D802	-
2	PLB6832D8	22211LBKC3	LB6932D8	H311032	69244	LB6932D86	PLB6832D802	-
2 3/16	PLB6835D8	22213LBKC3	LB6935D8	H313035	69324	LB6936D86	PLB6835D802	-
2 7/16	PLB6839D8*	22215LBKC3	LB6839D8	H315039	68404	LB6840D86	PLB6839D802	-
2 11/16	PLB6843D8*	22216LBKC3	LB6843D8	H316043	68444	LB6844D86	PLB6843D802	-
2 15/16	PLB6847D8*	22217LBKC3	LB6847D8	H317047	68484	LB6848D86	PLB6847D802	-
3	PLB6848D8*	22217LBKC3	LB6848D8	H317048	68484	LB6848D86	PLB6848D802	-
3 3/16	PLB6851D8*	22218LBKC3	LB6851D8	H318051	68524	LB6852D86	PLB6851D802	-
3 7/16	PLB6855D8*	22220LBKC3	LB6855D8	H320055	68564	LB6856D86	PLB6855D802	-
3 11/16	PLB6859FD8	22222LBKC3	LB6859D8	H322059	68644	LB6868D86	-	PLB6859FD802
3 15/16	PLB6863FD8	22222LBKC3	LB6863D8	H322063	68644	LB6868D86	-	PLB6863FD802
4 3/16	PLB6867FD8	22224LBKC3	LB6867D8	H3124067	68684	LB6868D86	-	PLB6867FD802
4 7/16	PLB6871FD8	22226LBKC3	LB6871D8	H3126071	68724	LB6880D86	-	PLB6871FD802
4 15/16	PLB6879FD8	22228LBKC3	LB6879D8	H3128079	68804	LB6880D86	-	PLB6879FD802
5 7/16	PLB6887FD8	22232LBKC3	LB6887D8	H3132087	68924	LB6888D86	-	PLB6887FD802
5 15/16	PLB6895FD8	22234LBKC3	LB6895D8	H3134095	68964	LB68104D86	-	PLB6895FD802
6	PLB6896FD8	22234LBKC3	LB6896D8	H3134096	68964	LB68104D86	-	PLB6896FD802
6 7/16	PLB68103FD8	22236LBKC3	LB68103D8	H3136103	681044	LB68104D86	-	PLB68103FD802
6 1/2	PLB68104FD8	22236LBKC3	LB68104D8	H3136104	681044	LB68104D86	-	PLB68104FD802
6 15/16	PLB68111FD8	22238LBKC3	LB68111D8	H3138111	681124	LB68112D86	-	PLB68111FD802
7	PLB68112FD8	22238LBKC3	LB68112D8	H3138112	681124	LB68112D86	-	PLB68112FD802
7 1/2	PLB68120FD8	22244LBKC3	LB68120D8	H3144120	681284	LB68128D86	-	PLB68120FD802
7 15/16	PLB68127FD8	22244LBKC3	LB68127D8	H3144127	681284	LB68128D86	-	PLB68127FD802
8	PLB68128FD8	22244LBKC3	LB68128D8	SNW448	681284	LB68128D86	-	PLB68128FD802
8 7/16	PLB66135FD8	23048LBKC3	LB66135D8	SNP30488716	661444	LB66144D86	-	PLB66135FD802
8 1/2	PLB66136FD8	23048LBKC3	LB66136D8	SNP3048812	661444	LB66144D86	-	PLB66136FD802
9	PLB66144FD8	23048LBKC3	LB66144D8	SNP30489	661444	LB66144D86	-	PLB66144FD802
9 1/2	PLB66B152FD8	23056LBKC3	LB66152D8	SNP3056912	661684	LB66168D86	-	PLB66B152FD802
10 1/2	PLB66168FD8	23056LBKC3	LB66168D8	SNP30561012	661684	LB66168D86	-	PLB66168FD802

Additional Notes

*2-bolt base listed. For 4-bolt base add suffix F; i.e. PLB6839FD8 Pillow Block or PLB6839FD802 housing.

Housing part numbers listed above include seals and C-Spacer ring.

PLB6900, SAF22600 Spherical Roller Bearing Unit Replacement Parts

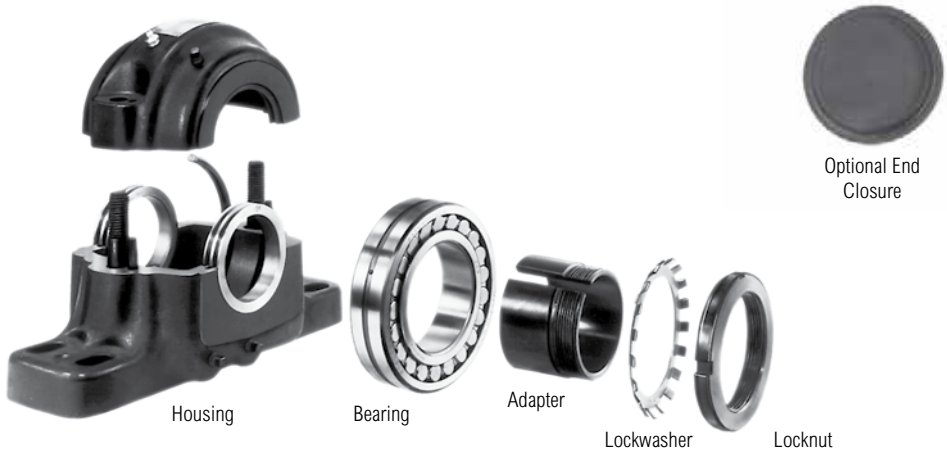

Bearing Dimensions

Shaft Diameter	Pillow Block	Spherical Roller Bearing	Multi-Labyrinth Seal Type R	Adapter Assembly	C-Spacer	End Closure	2-Bolt Cast Iron Adapter Mounted Housing	4-Bolt Cast Iron Adapter Mounted Housing
	Part Number	Part Number	Part Number	Part Number	Part Number	Part Number	Part Number	Part Number
1 7/16	PLB6923R	22309LBKC3	LB69233R	H2309023	69244	LB69246R	PLB6923R02	-
1 1/2	PLB6924R	22309LBKC3	LB69243R	SNW109112	69244	LB69246R	PLB6924R02	-
1 11/16	PLB6927R	22310LBKC3	LB69273R	H2310027	69284	LB69286R	PLB6927R02	-
1 15/16	PLB6931R	22311LBKC3	LB69313RA	SNW11111516	69324	LB69326R	PLB6931R02	-
2	PLB6932R	22311LBKC3	LB69323R	H2311032	69324	LB69326R	PLB6932R02	-
2 3/16	PLB6935R*	22313LBKC3	L69353R	H2313035	68444	LB69366R	PLB6935R02	-
2 7/16	PLB6939R*	22315LBKC3	LB68393RA	H2315039	68524	LB68406R	PLB6839R02	-
2 1/2	PLB6940R*	22315LBKC3	LB68403R	SNW115212	68524	LB68406R	PLB6840R02	-
2 11/16	PLB6943R*	22316LBKC3	LB68433RA	H2316043	69444	LB68446R	PLB6843R02	-
2 15/16	PLB6947R*	22317LBKC3	LB69473K	H2317047	68564	LB68486R	PLB6847R02	-
3 3/16	SAF22618303	22318LBKC3	LB68513R	H2318051	68644	LB68526R	-	SAF61830302
3 7/16	SAF22620307	22320LBKC3	LB68553RA	H2320055	68684	LB68566R	-	SAF62030702
3 1/2	SAF22620308	22320LBKC3	LB68563R	SNW120312	68684	LB68566R	-	SAF62030802
3 15/16	SAF22622315	22322LBKC3	LB68633RA	H2322063	69644	LB68646R	-	SAF62231502
4	SAF22622400	22322LBKC3	LB68643R	SNW1224	69644	LB68646R	-	SAF62240002
4 3/16	SAF22624403	22324LBKC3	LB68673R	SNW1244316	69684	LB68686R	-	SAF62440302
4 7/16	SAF22626407	22326LBKC3	LB68713RA	SNW1264716	69724	LB68726R	-	SAF62640702
4 15/16	SAF22628415	22328LBKC3	LB68793R	SNW12841516	69804	LB68806R	-	SAF62841502
5	SAF22628500	22328LBKC3	LB68803R	SNW1285	69804	LB68806R	-	SAF62850002
5 3/16	SAF22630503	22330LBKC3	LB68833R	SNW1305316	69844	LB68846R	-	SAF63050302
5 7/16	SAF22632507	22332LBKC3	LB68873R	SNW1325716	681124	LB68886R	-	SAF63250702
5 15/16	SAF22634515	22334LBKC3	LB68953R	SNW13451516	69964	LB68966R	-	SAF63451502
8 15/16	PLB22648K81516	22348LBKC3	-	SNP14881516	-	-	-	PLB648K8151602
10 7/16	PLB22656K10716	22356LBKC3	-	H235610716	-	-	-	PLB656K1071602

Additional Notes

*2-bolt base listed. For 4-bolt base add suffix F; i.e. PLB6939FR Pillow Block or PLB6939FR02 housing.

Housing part numbers listed above include seals and C-Spacer ring.

PLB7600, PLB7800 Spherical Roller Bearing Unit Replacement Parts

Housing

Bearing

Optional End Closure

Bearing Dimensions

Shaft Diameter	Pillow Block	Spherical Roller Bearing	Labyrinth Seal		C-Spacer	End Closure	2-Bolt Cast Iron Adapter Mounted Housing	4-Bolt Cast Iron Adapter Mounted Housing
			V1	V2				
	Part Number	Part Number	Part Number	Part Number	Part Number	Part Number	Part Number	Part Number
2.9528	PLB7875R*	22215LBC3	L78753R1	LB78753R2	68404	LB68446R	PLB7875R02	-
3.1496	PLB7880R*	22216LBC3	L78803R1	LB68483R	68444	LB68486R	PLB7880R02	-
3.3465	PLB7885R*	22217LBC3	L78853R1	L78853R2	68484	L78856R	PLB7885R02	-
3.5433	PLB7890R*	22218LBC3	LB68663R	L78903R2	68524	LB68526R	PLB7890R02	-
3.9370	PLB78100R*	22220LBC3	LB68723R	L781003R2	68564	L781006R	PLB78100R02	-
4.3307	PLB78110FR	22222LBC3	LB68783R	LB68673R	68644	LB68686R	-	PLB78110FR02
4.7244	PLB78120FR	22224LBC3	LB68B853R	LB781203R2	68684	LB68726R	-	PLB78120FR02
5.1181	PLB78130FR	22226LBC3	L781303R1	LB68793R	68724	LB68806R	-	PLB78130FR02
5.5118	PLB78140FR	22228LBC3	L781403R1	LB68B853R	68804	LB68846R	-	PLB78140FR02
5.9055	PLB78150FR	22230LBC3	L781503R1	L781503R2	68844	L781506R	-	PLB78150FR02
6.2992	PLB78160FR	22232LBC3	LB681123R	LB781603R2	68924	LB68966R	-	PLB78160FR02
6.6929	PLB78170FR	22234LBC3	L781703R1	LB681033R	68964	LB681046R	-	PLB78170FR02
7.0866	PLB78180FR	22236LBC3	LB681253R	LB681103R	681044	LB681126R	-	PLB78180FR02
7.4803	PLB78190FR	22238LBC3	L781903R1	LB681163R	681124	LB681166R	-	PLB78190FR02
7.8740	PLB78200FR	22240LBC3	L782003R1	L782003R2	681164	L782006R	-	PLB78200FR02
8.6614	PLB78220FR	22244LBC3	L782203R1	L782203R2	681284	L782206R	-	PLB78220FR02
8.6614	PLB22244	22244LBC3	-	-	-	-	-	PLB24402
9.4488	PLB76240FR	23048LBC3	LB661683R	LB762403R2	661444	LB661686	-	PLB76240FR02
9.4488	PLB22248	22248LBC3	-	-	-	-	-	PLB24802
11.0236	PLB76280FR	23056LBC3	LB762803R1	LB762803R2	661684	LB762806	-	PLB76280FR02

Additional Notes

*2-bolt base listed. For 4-bolt base add suffix F; i.e. PLB7875FR Pillow Block or PLB7875FR02 housing.

Housing part numbers listed above include seals and C-Spacer ring.

PLB7900, SAF22300 Spherical Roller Bearing Unit Replacement Parts

Optional End Closure

Bearing Dimensions

Shaft Diameter	Pillow Block	Spherical Roller Bearing	Labyrinth Seal		C-Spacer	End Closure	2-Bolt Cast Iron Adapter Mounted Housing	4-Bolt Cast Iron Adapter Mounted Housing
			V1	V2				
	Part Number	Part Number	Part Number	Part Number	Part Number	Part Number	Part Number	Part Number
1.7717	PLB7945R	22309LBC3	LB69343R	LB69273R	69244	LB69286R	PLB7945R02	-
1.9685	PLB7950R	22310LBC3	L79503R1	LB69303R	69284	LB69326R	PLB7950R02	-
2.1654	PLB7955R*	22311LBC3	LB79553R1	LB69333R	69324	LB69366R	PLB7955R02	-
2.5591	PLB7965R*	22313LBC3	LB79653R1	LB68393RA	68444	LB68406R	PLB7965R02	-
2.9528	PLB7975R*	22315LBC3	L78753R1	LB78753R2	68524	LB68446R	PLB7975R02	-
3.1496	PLB7980R*	22316LBC3	L78803R1	LB68483R	69444	LB68486R	PLB7980R02	-
3.3465	PLB7985R*	22317LBC3	L78853R1	L78853R2	68564	L78856R	PLB7985R02	-
3.5433	SAF22318	22318LBC3	LB68663R	L78903R2	69564	LB68526R	-	SAF31802
3.9370	SAF22320	22320LBC3	LB68723R	L781003R2	68684	L781006R	-	SAF32002
4.3307	SAF22322	22322LBC3	LB68783R	LB68673R	69644	LB68686R	-	SAF32202
4.7244	SAF22324	22324LBC3	LB68B853R	LB781203R2	69684	LB68726R	-	SAF32402
5.1181	SAF22326	22326LBC3	L781303R1	LB68793R	69724	LB68806R	-	SAF32602
5.5118	SAF22328	22328LBC3	L781403R1	LB68B853R	69804	LB68846R	-	SAF32802
5.9055	SAF22330	22330LBC3	L781503R1	L781503R2	69844	L781506R	-	SAF33002
6.2992	SAF22332	22332LBC3	LB681123R	LB781603R2	69884	LB68966R	-	SAF33202
6.6929	SAF22334	22334LBC3	L781703R1	LB681033R	69964	LB681046R	-	SAF33402
9.4488	PLB22348	22348LBC3	-	-	-	-	-	PLB34802
11.0236	PLB22356	22356LBC3	-	-	-	-	-	PLB35602

Additional Notes

*2-bolt base listed. For 4-bolt base add suffix F; i.e. PLB7955FR Pillow Block or PLB7955FR02 housing.

Housing part numbers listed above include seals and C-Spacer ring.

PLB23000K Spherical Roller Bearing Unit Replacement Parts

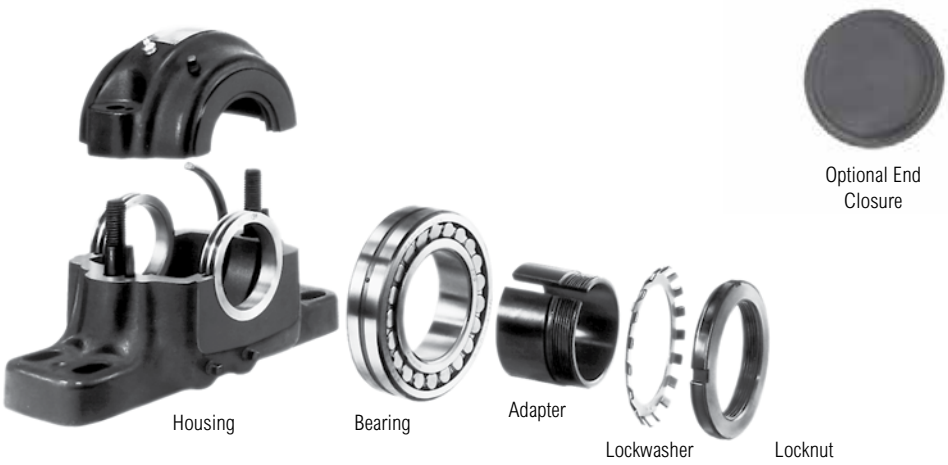

Bearing Dimensions

Shaft Diameter	Part Number	Bearing Insert	Adapter Assy	Housing Part Number
7 15/16	PLB23044K71516	23044LBKC3	H3044127	PLB044K7151602
8	PLB23044K8	23044LBKC3	SNW30448	PLB044K802
8 1/2	PLB23048K812	23048LBKC3	SNP3048812	PLB048K81202
8 15/16	PLB23048K81516	23048LBKC3	SNP30481516	PLB048K8151602
9	PLB23048K9	23048LBKC3	SNP30489	PLB048K902
9 7/16	PLB23052K9716	23052LBKC3	SNP30529716	PLB052K971602
9 1/2	PLB23052K912	23052LBKC3	SNP30529716	PLB052K91202
9 15/16	PLB23056K91516	23056LBKC3	SNP305691516	PLB056K9151602
10	PLB23056K10	23056LBKC3	SNP305610	PLB056K1002
10 7/16	PLB23056K10716	23056LBKC3	SNP305610716	PLB056K1071602
10 15/16	PLB23060K101516	23060LBKC3	SNP3060101516	PLB3060K10151602
11	PLB23060K11	23060LBKC3	SNP3060101516	PLB3060K1102
11 15/16	PLB23064K111516	23064LBKC3	SNP3064111516	PLB3064K11151602
12	PLB23064K12	23064LBKC3	SNP306412	PLB3064K1202
12 1/2	PLB23068K1212	23068LBKC3	SNP30681212	PLB3068K121202
12 15/16	PLB23072K121516	23072LBKC3	SNP3072121516	PLB3072K12151602
13	PLB23072K13	23072LBKC3	SNP307213	PLB3072K1302
13 15/16	PLB23076K131516	23076LBKC3	SNP3076131516	PLB3076K13151602
14	PLB23076K14	23076LBKC3	SNP307614	PLB3076K1402
15	PLB23080K15	23080LBKC3	SNP308015	PLB3080K1502
15 3/4	PLB23084K1534	23084LBKC3	SNP30841534	PLB3084K153402
16 1/2	PLB23088K1612	23088LBKC3	SNP30881612	PLB3088K161202
17	PLB23092K17	23092LBKC3	SNP309217	PLB3092K1702
18	PLB23096K18	23096LBKC3	SNP309618	PLB3096K1802
19 1/2	PLB230530K1912	230530LBKC3	SNP305301912	PLB30530K191202
21	PLB230560K21	230560LBKC3	SNP3056021	PLB30560K2102
22	PLB230600K22	230600LBKC3	SNP3060022	PLB30600K2202
24	PLB230630K24	230630LBKC3	SNP3063024	PLB30630K2402

Additional Notes

Housing part numbers listed above include seals and C-Spacer ring.

PLB23000 Spherical Roller Bearing Unit Replacement Parts

Optional End Closure

Bearing Dimensions

Shaft Diameter	Part Number	Bearing Insert	Housing Part Number
8.6614	PLB23044	23044LBC3	PLB04402
9.4488	PLB23048	23048LBC3	PLB04802
10.2362	PLB23052	23052LBC3	PLB05202
11.0236	PLB23056	23056LBC3	PLB05602
11.8110	PLB23060	23060LBC3	PLB306002
12.5984	PLB23064	23064LBC3	PLB306402
13.3858	PLB23068	23068LBC3	PLB306802
14.1732	PLB23072	23072LBC3	PLB307202
14.9606	PLB23076	23076LBC3	PLB307602
15.7480	PLB23080	23080LBC3	PLB308002
16.5354	PLB23084	23084LBC3	PLB308402
17.3228	PLB23088	23088LBC3	PLB308802
18.1102	PLB23092	23092LBC3	PLB309202
18.8976	PLB23096	23096LBC3	PLB309602
20.8661	PLB230530	230530LBC3	PLB3053002
22.0472	PLB230560	230560LBC3	PLB3056002

Additional Notes

Housing part numbers listed above include seals and C-Spacer ring.

PLB23100K Spherical Roller Bearing Unit Replacement Parts

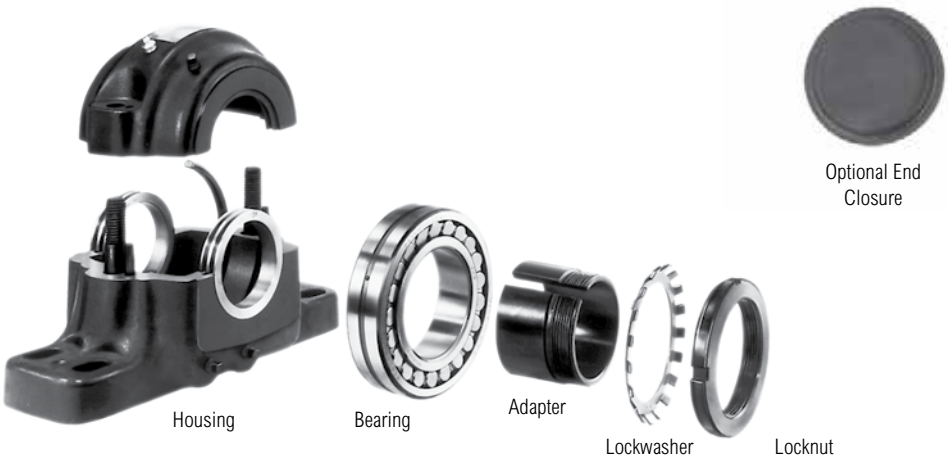

Bearing Dimensions

Shaft Diameter	Part Number	Bearing Insert	Adapter Assy	Housing Part Number
8	PLB23144K8	23144LBKC3	SNW30448	PLB3144K802
8 15/16	PLB23148K81516	23148LBKC3	SNP314881516	PLB3148K8151602
9 7/16	PLB23152K9716	23152LBKC3	SNP31529716	PLB3152K971602
10 7/16	PLB23156K10716	23156LBKC3	SNP315610716	PLB3156K1071602
10 15/16	PLB23160K101516	23160LBKC3	SNP3160101516	PLB3160K10151602
11 15/16	PLB23164K111516	23164LBKC3	SNP3164111516	PLB3164K11151602
12 7/16	PLB23168K12716	23168LBKC3	SNP316812716	PLB3168K1271602
13 7/16	PLB23172K13716	23172LBKC3	SNP317213716	PLB3172K1371602
13 15/16	PLB23176K131516	23176LBKC3	SNP3176131516	PLB3176K13151602
15	PLB23180K15	23180LBKC3	SNP318015	PLB3180K1502
15 3/4	PLB23184K1534	23184LBKC3	SNP31841534	PLB3184K153402
16 1/2	PLB23188K1612	23188LBKC3	SNP31881612	PLB3188K161202
17	PLB23192K17	23192LBKC3	SNP319217	PLB3192K1702
18	PLB23196K18	23196LBKC3	SNP319618	PLB3196K1802
19 1/2	PLB231530K1912	231530LBKC3	SNP315301912	PLB31530K191202
21	PLB231560K21	231560LBKC3	SNP3156021	PLB31560K2102

Additional Notes

Housing part numbers listed above include seals and C-Spacer ring.

PLB23100 Spherical Roller Bearing Unit Replacement Parts

Optional End Closure

Bearing Dimensions

Shaft Diameter	Part Number	Bearing Insert	Housing Part Number
8.6614	PLB23144	23144LBC3	PLB314402
9.4488	PLB23148	23148LBC3	PLB314802
10.2362	PLB23152	23152LBC3	PLB315202
11.0236	PLB23156	23156LBC3	PLB315602
11.8110	PLB23160	23160LBC3	PLB316002
12.5984	PLB23164	23164LBC3	PLB316402
13.3858	PLB23168	23168LBC3	PLB316802
14.1732	PLB23172	23172LBC3	PLB317202
14.9606	PLB23176	23176LBC3	PLB317602
15.7480	PLB23180	23180LBC3	PLB318002
16.5354	PLB23184	23184LBC3	PLB318402
17.3228	PLB23188	23188LBC3	PLB318802
18.1102	PLB23192	23192LBC3	PLB319202
18.8976	PLB23196	23196LBC3	PLB319602
20.8661	PLB231530	231530LBC3	PLB3153002
22.0472	PLB231560	231560LBC3	PLB3156002

Additional Notes

Housing part numbers listed above include seals and C-Spacer ring.

PLB23200K Spherical Roller Bearing Unit Replacement Parts

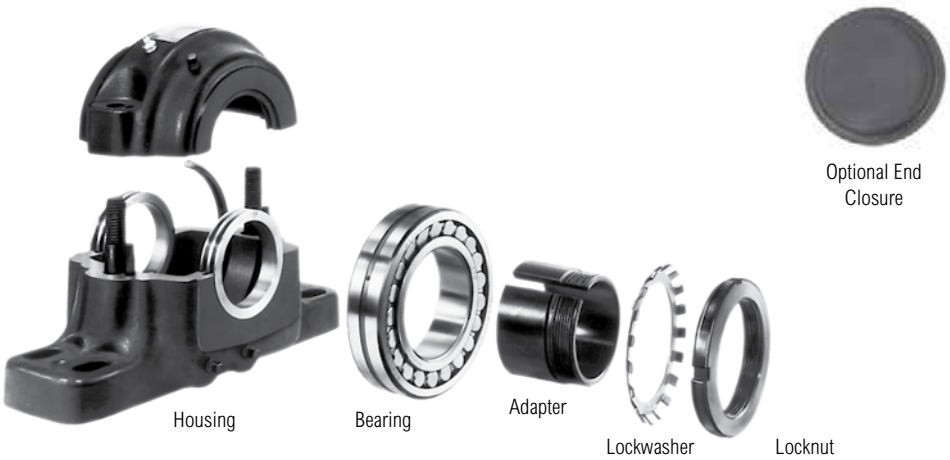

Bearing Dimensions

Shaft Diameter	Part Number	Bearing Insert	Adapter Assy	Housing Part Number
8	PLB23244K8	23244LBKC3	SNW1448	PLB3244K802
8 15/16	PLB23248K81516	23248LBKC3	SNP14881516	PLB3248K8151602
9 7/16	PLB23252K9716	23252LBKC3	SNP1529716	PLB3252K971602
10 7/16	PLB23256K10716	23256LBKC3	SNP325610716	PLB3256K1071602
10 15/16	PLB23260K101516	23260LBKC3	SNP3260101516	PLB3260K10151602
11 15/16	PLB23264K111516	23264LBKC3	SNP3264111516	PLB3264K11151602
12 7/16	PLB23268K12716	23268LBKC3	SNP326812716	PLB3268K1271602
13 7/16	PLB23272K13716	23272LBKC3	SNP327213716	PLB3272K1371602
13 15/16	PLB23276K131516	23276LBKC3	SNP3276131516	PLB3276K13151602
15	PLB23280K15	23280LBKC3	SNP328015	PLB3280K1502
15 3/4	PLB23284K1534	23284LBKC3	SNP32841534	PLB3284K153402
16 1/2	PLB23288K1612	23288LBKC3	SNP32881612	PLB3288K161202
17	PLB23292K17	23292LBKC3	SNP329217	PLB3292K1702
18	PLB23296K18	23296LBKC3	SNP329618	PLB3296K1802

Additional Notes

Housing part numbers listed above include seals and C-Spacer ring.

PLB23200 Spherical Roller Bearing Unit Replacement Parts

Optional End Closure

Bearing Dimensions

Shaft Diameter	Part Number	Bearing Insert	Housing Part Number
8.6614	PLB23244	23244LBC3	PLB324402
9.4488	PLB23248	23248LBC3	PLB324802
10.2362	PLB23252	23252LBC3	PLB325202
11.0236	PLB23256	23256LBC3	PLB325602
11.8110	PLB23260	23260LBC3	PLB326002
12.5984	PLB23264	23264LBC3	PLB326402
13.3858	PLB23268	23268LBC3	PLB326802
14.1732	PLB23272	23272LBC3	PLB327202
14.9606	PLB23276	23276LBC3	PLB327602
15.7480	PLB23280	23280LBC3	PLB328002
16.5354	PLB23284	23284LBC3	PLB328402
17.3228	PLB23288	23288LBC3	PLB328802
18.1102	PLB23292	23292LBC3	PLB329202
18.8976	PLB23296	23296LBC3	PLB329602

Additional Notes

Housing part numbers listed above include seals and C-Spacer ring.

Spherical Roller Bearings: Link-Belt

Contents

	Page
Features and Benefits	256
Nomenclature	257
Engineering	258
Dimensions	
Unmounted Bearings	274
Single-Row	282
Double-Row	283

Industries Served

Mining
Forest Products
Aggregates
Steel
Air Handling
Construction
Package Handling
Wastewater Treatment

Series 22200, 22300, 23000, 23100, 23200 Spherical Roller Bearings

Self-aligning and self-contained spherical roller bearings provide high capacity for heavy-duty and high-precision applications. They are used extensively on earth-moving equipment, vibrating screens, steel mill and paper mill equipment, embossing rolls, printing presses, and torque converters.

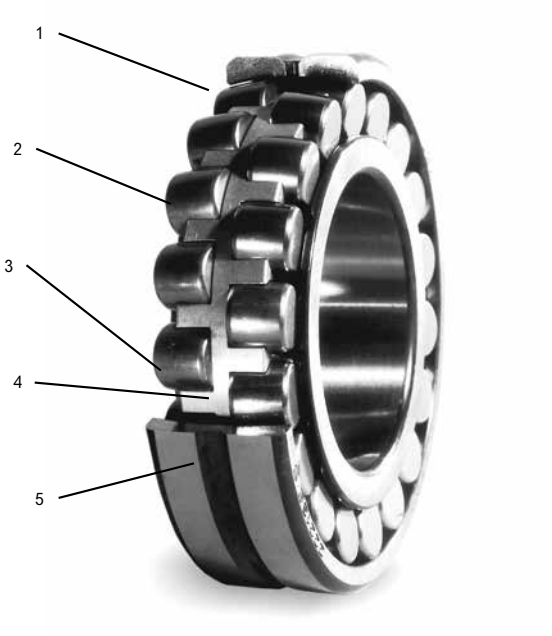

1. **Positive Roller Guidance is Provided from Rugged Retainer Design**
2. **Large High-capacity Rollers for Extended Bearing Life**
3. **Raceway Curvatures**
   Controlled raceway curvatures afford precise osculation clearance preventing roller edge loading.
4. **Micro-finished Raceways Assure Smooth Operation**
5. **Maximum Lubrication**
   Outer ring groove and three symmetrically spaced holes for maximum lubrication access.

Series A20000 Spherical Roller Bearings

Self-aligning separable outer ring bearings of single row adjustable and double row adjustable or non adjustable types for high capacity and minimum space requirements. These compact bearings feature the latest design refinements.

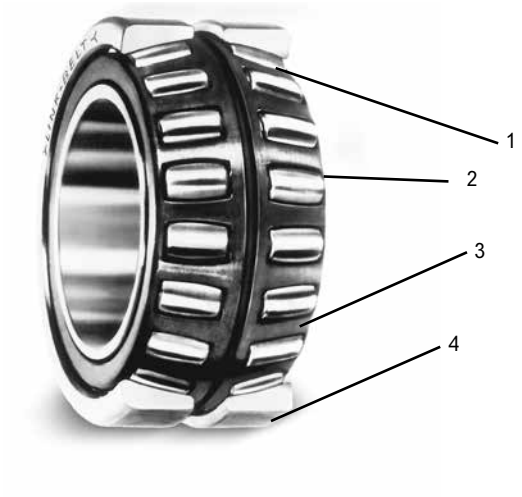

1. **Raceway Curvatures.**
   Controlled raceway curvatures afford precise osculation clearance to avoid edge loading and provide high capacity.
2. **Steel Retainer Pockets.**
   Roller guidance is provided by double contoured coined steel retainer pockets.
3. **Large rollers for extended bearing life.**
4. **Micro-finished raceways assure smooth operation.**

Rollers

Rollers' symmetrical roller design permits natural roller positioning and distribution of load in dynamic operation. Curvatures of roller contact surfaces are contoured to control stress distribution under all combinations of radial and thrust loads within design capacities.

Rings

The geometry and sections of the outer and inner rings and rollers result in high capacity and long bearing life. Controlled raceway curvatures on inner and outer rings and rollers afford precise osculation clearances, preventing roller edge loading. Outer ring raceways are spherically finished to provide freedom of alignment under variable conditions.

Retainers

Double contoured deep coined pockets provide accurate roller guidance. Separate retainer for each row of rollers allows rollers to seek ultimate rolling path and operating angle for all radial/thrust load conditions.

22200, 22300, 23000, 23100, 23200, 23900 Nomenclature

2 22 16 LB K / W33 / C0

Symbol	Description
2	Used to distinguish from other series
22	Bearing dimension series (22, 23, 30, 31, 32, 39)
16	One-fifth of bore diameter (mm)
LB	Designation for Link-Belt spherical roller bearing
None	Cylindrical bore
K	Tapered bore
W33	Lubrication holes and groove in outer ring (standard)
C2	Internal clearance less than C0
C0	Basic internal clearance
C3	Internal clearance greater than C0 (standard)
C4	Internal clearance greater than C3

A20000 Nomenclature

A 22 196 M C0 C40

Symbol	Description
A	Spherical roller bearing, separable outer ring(s)
22	Basic bearing series
23	Larger O.D. or greater load rating than series 22
24	Larger O.D. or greater load rating than series 23
196	Bore size in hundredths of an inch
None	Double row roller bearing; separable outer rings
M	Double row bearing; separable outer rings with spacer for preadjusted clearance
S	Single row roller bearing; adjustable
C2	Internal clearance less than C0
C0	Standard internal clearance
C3	Internal clearance greater than C0
W22	Reduced O.D. tolerance in center of tolerance range
C40	Reduced O.D. tolerance in high half of tolerance range
C50	Reduced O.D. tolerance in low half of tolerance range

Spherical Roller Bearing Series 22200, 22300, 23000, 23100, 23200 and 23900 Selection Guide

To select a pillow block, determine the applied radial load, the applied thrust load, the desired Rating Life, the required minimum shaft size, and applicable operating conditions. The procedure shown here will aid in selecting a pillow block to meet an L_{10} design life. The formulas for calculating life expectancy should be used to determine the Rating Life L_{10} for the pillow block selected. Spherical roller bearing pillow blocks are available in Series 22200, 22300, 23000, 23100, 23200, and 23900. Because a number of series are available, several different pillow blocks that will fulfill and L_{10} life requirement can often be chosen.

Some of the factors to consider when choosing between series are: cost, speed limit, minimum shaft diameter, thrust load, space limitations, and type of shaft mounting.

The selection procedures and rating formulas shown here are in agreement with The American Bearing Manufacturers Association Standards and ANSI/ ABMA Standards STD 11-1990. Ratings are based on fatigue life.

The Rating Life L_{10} or fatigue life at 90% reliability is the usual basis for bearing selection.

To assure a satisfactory bearing application, fitting practice, mounting, lubrication, sealing, static rating, housing strength, operating conditions and maintenance must be considered.

Steps for Selection

Step 1

Determine an appropriate L_{10} design life.

Type of service	Operating time, hours per year	Design life, years	L_{10} design life, hours
Heavy seasonal usage	1,400 to 1,600	4-6	8,000
Industrial—8 hour shift	2,000	10	20,000
Industrial—16 hour shift	4,000	10	40,000
Industrial—continuous	8,700	10	80,000 to 100,000
Industrial—High reliability	—	—	120,000 to 300,000

Step 2

Determine a required $\left(\frac{C}{P}\right)$ from Table 1.

Step 3

Calculate the required C and select a roller bearing pillow block.

a For radial load only: $P = F_r$

Required C = $\left(\frac{C}{P}\right)$ P using $\left(\frac{C}{P}\right)$ from Step 2

Select a roller bearing pillow block from Tables 2 - 7 having a basic load rating C equal to or greater than the required C.

b For combined radial and thrust loads:

Select a roller bearing pillow block of the desired shaft size from Tables 2 - 7

Calculate the ratio of thrust load F_a to the radial load F_r.

$$\frac{F_a}{F_r}$$

Calculate the equivalent radial load P

$$P = XF_r + YF_a$$

If $\frac{F_a}{F_r}$ is equal to or less than e, then $P = X_1F_r + Y_1F_a$

If $\frac{F_a}{F_r}$ is greater than e, then $P = X_2F_r + Y_2F_a$

For values of e, X_1, Y_1, X_2, and Y_2, see Tables 2 - 7

Required C = $\left(\frac{C}{P}\right)$ P using $\left(\frac{C}{P}\right)$ from Step 2

Consult the bearing rating Tables 2 - 7, to see if the selected bearing meets or exceeds the required C. The life expectancy of other sizes and series of bearings can be calculated similarly.

Selection

Symbols for formulas:

C = basic load rating, pounds (or newtons)
Co = static load rating, pounds (or newtons)
e = a reference value
F_a = thrust load, pounds (or newtons)
F_r = radial load, pounds (or newtons)
L_{10} = rating life, hours
n = speed, revolutions per minute
P = equivalent radial load, pounds (or newtons)
X = radial factor
Y = thrust factor

Table 1 • Relation of L_{10} life and speed to $\left(\frac{C}{P}\right)$

Bearing Life Hours L_{10}	Speed, n								
	50	100	200	300	400	500	600	700	800
3000	1.93	2.38	2.93	3.31	3.61	3.86	4.07	4.27	4.44
4000	2.11	2.59	3.19	3.61	3.93	4.20	4.44	4.65	4.84
5000	2.25	2.77	3.42	3.86	4.20	4.50	4.75	4.97	5.18
6000	2.38	2.93	3.61	4.07	4.44	4.75	5.02	5.25	5.47
8000	2.59	3.19	3.93	4.44	4.84	5.18	5.47	5.73	5.96
10000	2.77	3.42	4.20	4.75	5.18	5.54	5.85	6.12	6.37
12000	2.93	3.61	4.44	5.02	5.47	5.85	6.18	6.47	6.73
14000	3.07	3.78	4.65	5.25	5.73	6.12	6.47	6.77	7.05
16000	3.19	3.93	4.84	5.47	5.96	6.37	6.73	7.05	7.34
18000	3.31	4.07	5.02	5.66	6.18	6.60	6.97	7.30	7.60
20000	3.42	4.20	5.18	5.85	6.37	6.81	7.20	7.54	7.85
25000	3.65	4.50	5.54	6.25	6.81	7.29	7.70	8.06	8.39
30000	3.86	4.75	5.85	6.60	7.20	7.70	8.13	8.51	8.86
35000	4.04	4.97	6.12	6.92	7.54	8.06	8.51	8.92	9.28
40000	4.20	5.18	6.37	7.20	7.85	8.39	8.86	9.28	9.66
45000	4.36	5.36	6.60	7.46	8.13	8.69	9.18	9.61	10.00
50000	4.50	5.54	6.81	7.70	8.39	8.97	9.48	9.92	10.30
60000	4.75	5.85	7.20	8.13	8.86	9.48	10.00	10.50	10.90
70000	4.97	6.12	7.54	8.51	9.28	9.92	10.50	11.00	11.40
80000	5.18	6.37	7.85	8.86	9.66	10.30	10.90	11.40	11.90
90000	5.36	6.60	8.13	9.18	10.00	10.70	11.30	11.80	12.30
100000	5.54	6.81	8.39	9.48	10.30	11.00	11.70	12.20	12.70
150000	6.25	7.70	9.48	10.70	11.70	12.50	13.20	13.80	14.40
200000	6.81	8.39	10.30	11.70	12.70	13.60	14.40	15.00	15.70
	Speed, n								
	900	1000	1200	1500	1800	2400	3000	3600	6000
3000	4.60	4.75	5.02	5.36	5.66	6.18	6.60	6.97	8.13
4000	5.02	5.18	5.47	5.85	6.18	6.73	7.20	7.60	8.86
5000	5.36	5.54	5.85	6.25	6.60	7.20	7.70	8.13	9.48
6000	5.66	5.85	6.18	6.60	6.97	7.60	8.13	8.59	10.00
8000	6.18	6.37	6.73	7.20	7.60	8.29	8.86	9.36	10.90
10000	6.60	6.81	7.20	7.70	8.13	8.86	9.48	10.00	11.70
12000	6.97	7.20	7.60	8.13	8.59	9.36	10.00	10.60	12.30
14000	7.30	7.54	7.96	8.51	8.99	9.80	10.50	11.10	12.90
16000	7.60	7.85	8.29	8.86	9.36	10.20	10.90	11.50	13.40
18000	7.88	8.13	8.59	9.18	9.70	10.60	11.30	11.90	13.90
20000	8.13	8.39	8.86	9.48	10.00	10.90	11.70	12.30	14.40
25000	8.69	8.97	9.48	10.10	10.70	11.70	12.50	13.20	15.40
30000	9.18	9.48	10.00	10.70	11.30	12.30	13.20	13.90	16.20
35000	9.61	9.92	10.50	11.20	11.80	12.90	13.80	14.60	17.00
40000	10.00	10.30	10.90	11.70	12.30	13.40	14.40	15.20	17.70
45000	10.40	10.70	11.30	12.10	12.80	13.90	14.90	15.70	18.30
50000	10.70	11.00	11.70	12.50	13.20	14.40	15.40	16.20	18.90
60000	11.30	11.70	12.30	13.20	13.90	15.20	16.20	17.10	20.00
70000	11.80	12.20	12.90	13.80	14.60	15.90	17.00	17.90	20.90
80000	12.30	12.70	13.40	14.40	15.20	16.50	17.70	18.70	21.80
90000	12.80	13.20	13.90	14.90	15.70	17.10	18.30	19.40	22.60
100000	13.20	13.60	14.40	15.40	16.20	17.70	18.90	20.00	23.30
150000	14.90	15.40	16.20	17.30	18.30	20.00	21.40	22.60	26.30
200000	16.20	16.70	17.70	18.90	20.00	21.80	23.30	24.60	28.70

Basic Formula

$$\left(\frac{C}{P}\right) = \left(\frac{L_{10} \times n \times 60}{1{,}000{,}000}\right)^{3/10}$$

$$L_{10} = \frac{\left(\frac{C}{P}\right)^{10/3} \times 1{,}000{,}000}{n \times 60}$$

Life Expectancy

To calculate the Rating Life L_{10} of any selected or trial bearing:

Step 1

Determine the equivalent radial load P.

a For radial load only:

$$P = F_r$$

b For combined radial and thrust load:

$$P = XF_r + YF_a$$

if $\frac{F_a}{F_r}$ is equal to or less than e, then

$$P = X_1F_r + Y_1F_a$$

if $\frac{F_a}{F_r}$ is greater than e, then

$$P = X_2F_r + Y_2F_a$$

For values of e, X_1, Y_1, X_2, and Y_2, consult the appropriate bearing rating Table 2 Table 4.

Step 2

Calculate the ratio of the basic load rating C to the equivalent radial load.

$$\left(\frac{C}{P}\right)$$

Step 3

Approximate the bearing life from Table 1.

Live Adjustment

The Rating Life, L_{10}, may be modified for some applications in accordance with the formula

$$L_n = a_1a_2a_3L_{10}$$

where L_n = Adjusted life for (100-n) % reliability,
a_1 = Life adjustment factor for reliability
a_2 = Life adjustment factor for material and processing
a_3 = Life adjustment factor for operating conditions.

For most normal applications, all factors will be taken as 1, and the Rating Life used as the selection basis or life estimate. In addition, as long as standard catalog bearings are used, a_2 will be normally set equal to one.

The factor a_3 covers such things as lubrication, misalignment, and temperature. Some conditions that could yield a_3 significantly different than unity include speeds less than 20000 DN or greater than 200000 DN, temperatures below –40°F *(–40°C)* or above 275°F *(135°C)*. For other possible conditions, as well as additional information on life adjustment factors, consult Rexnord Bearing Division.

Table 2 • Series 22200LB, 22200LBK Load Ratings and Speed Limits

Bearing Number		Co Static Load Rating		C Basic Load Rating		Speed Limit, RPM		e	$\frac{Fa}{Fr} \le e$		$\frac{Fa}{Fr} > e$	
Cylindrical Bore	Tapered bore	newtons	pounds	newtons	pounds	Grease	Oil		X1	Y1	X2	Y2
22209LB	22209LBK	105000	23600	92500	20800	5300	6200	0.26	1.00	2.6	0.67	3.9
22210LB	22210LBK	113000	25500	97900	22000	5000	5500	0.26	1.00	2.8	0.67	4.2
22211LB	22211LBK	145000	32500	120000	27000	4500	5000	0.23	1.00	2.9	0.67	4.4
22212LB	22212LBK	180000	40500	151000	34000	4000	4500	0.24	1.00	2.8	0.67	4.2
22213LB	22213LBK	207000	46500	169000	38000	3800	4300	0.24	1.00	2.8	0.67	4.2
22214LB	22214LBK	222000	50000	178000	40000	3600	4000	0.23	1.00	2.9	0.67	4.4
22215LB	22215LBK	236000	53000	185000	41500	3400	3700	0.22	1.00	3.1	0.67	4.6
22216LB	22216LBK	260000	58500	207000	46500	3200	3500	0.22	1.00	3.1	0.67	4.7
22217LB	22217LBK	327000	73500	260000	58500	3000	3250	0.22	1.00	3.0	0.67	4.5
22218LB	22218LBK	363000	81500	285000	64000	2600	3000	0.23	1.00	2.9	0.67	4.3
22219LB	22219LBK	400000	90000	316000	71000	2400	2900	0.24	1.00	2.9	0.67	4.3
22220LB	22220LBK	463000	104000	356000	80000	2200	2800	0.24	1.00	2.8	0.67	4.2
22222LB	22222LBK	587000	132000	454000	102000	2000	2500	0.25	1.00	2.7	0.67	4.0
22224LB	22224LBK	725000	163000	534000	120000	1900	2300	0.25	1.00	2.7	0.67	4.0
22226LB	22226LBK	872000	196000	636000	143000	1800	2100	0.26	1.00	2.6	0.67	3.9
22228LB	22228LBK	1010000	228000	738000	166000	1700	1950	0.25	1.00	2.7	0.67	4.0
22230LB	22230LBK	1200000	270000	845000	190000	1600	1850	0.25	1.00	2.7	0.67	4.0
22232LB	22232LBK	1380000	310000	961000	216000	1500	1700	0.26	1.00	2.6	0.67	3.9
22234LB	22234LBK	1530000	345000	1110000	250000	1300	1600	0.26	1.00	2.6	0.67	3.9
22236LB	22236LBK	1620000	365000	1130000	255000	1300	1500	0.25	1.00	2.7	0.67	4.0
22238LB	22238LBK	1850000	415000	1200000	270000	1200	1400	0.28	1.00	2.4	0.67	3.6
22240LB	22240LBK	2000000	450000	1330000	300000	1100	1300	0.29	1.00	2.3	0.67	3.5
22244LB	22244LBK	2450000	550000	1620000	365000	1000	1200	0.29	1.00	2.3	0.67	3.5
22248LB	22248LBK	2890000	650000	1870000	420500	750	950	0.27	1.00	2.5	0.67	3.7

If the load P is greater than .25C, consult Rexnord Bearing Division.

Speed limits are based on the following:

1. Negligible seal torque (e.g., non-contact seals).
2. Proper operating internal clearance.
3. Adequate lubrication and maintenance (special lubricants and/or more frequent relubrication may be required).
4. Normal room temperature environment and no extraneous heat sources, such that bearing operating temperature does not exceed 100°C *(212°F)*.
5. Equivalent radial load not greater than 7% of C.
6. Axial load, if any, not greater than 20% of radial load.

Table 3 • Series 22300LB,22300LBK Load Ratings and Speed Limits

Bearing Number		Co Static Load Rating		C Basic Load Rating		Speed Limit RPM			$\frac{Fa}{Fr} \le e$		$\frac{Fa}{Fr} > e$	
Cylindrical Bore	Tapered Bore	newtons	pounds	newtons	pounds	Grease	Oil	e	X1	Y1	X2	Y2
22308LB	22308LBK	145000	32500	129000	29000	4500	5600	0.36	1.00	1.9	0.67	2.8
22309LB	22309LBK	178000	40000	158000	35500	3800	4800	0.36	1.00	1.9	0.67	2.8
22310LB	22310LBK	214000	48000	189000	42500	3600	4300	0.36	1.00	1.9	0.67	2.8
22311LB	22311LBK	254000	57000	222000	50000	3200	4000	0.36	1.00	1.9	0.67	2.8
22312LB	22312LBK	302000	68000	260000	58500	3000	3800	0.35	1.00	1.9	0.67	2.8
22313LB	22313LBK	356000	80000	291000	65500	2600	3400	0.34	1.00	2.0	0.67	3.0
22314LB	22314LBK	378000	85000	320000	72000	2400	3200	0.34	1.00	2.0	0.67	3.0
22315LB	22315LBK	436000	98000	369000	83000	2200	3000	0.34	1.00	2.0	0.67	3.0
22316LB	22316LBK	498000	112000	414000	93000	2000	2800	0.34	1.00	2.0	0.67	3.0
22317LB	22317LBK	543000	122000	454000	102000	1900	2600	0.33	1.00	2.0	0.67	3.0
22318LB	22318LBK	623000	140000	507000	114000	1800	2400	0.33	1.00	2.0	0.67	3.0
22319LB	22319LBK	681000	153000	556000	125000	1800	2400	0.33	1.00	2.0	0.67	3.0
22320LB	22320LBK	814000	183000	649000	146000	1700	2200	0.34	1.00	2.0	0.67	3.0
22322LB	22322LBK	1050000	236000	801000	180000	1600	2000	0.33	1.00	2.1	0.67	3.1
22324LB	22324LBK	1160000	260000	907000	204000	1400	1800	0.33	1.00	2.1	0.67	3.1
22326LB	22326LBK	1360000	305000	1050000	236000	1300	1700	0.33	1.00	2.1	0.67	3.1
22328LB	22328LBK	1600000	360000	1220000	275000	1100	1500	0.34	1.00	2.0	0.67	3.0
22330LB	22330LBK	1800000	405000	1380000	310000	1000	1400	0.33	1.00	2.0	0.67	3.0
22332LB	22332LBK	1890000	425000	1450000	325000	950	1300	0.37	1.00	1.8	0.67	2.7
22334LB	22334LBK	2110000	475000	1600000	360000	950	1300	0.37	1.00	1.8	0.67	2.7
22336LB	22336LBK	2360000	530000	1730000	390000	900	1200	0.37	1.00	1.8	0.67	2.7
22338LB	22338LBK	2540000	570000	1850000	415000	850	1100	0.37	1.00	1.8	0.67	2.7
22340LB	22340LBK	2800000	630000	2070000	465000	850	1100	0.36	1.00	1.9	0.67	2.8
22344LB	22344LBK	3340000	750000	2360000	530000	700	900	0.35	1.00	2.0	0.67	2.9
22348LB	22348LBK	3800000	854500	2600000	584500	670	850	0.32	1.00	2.1	0.67	3.2
22356LB	22356LBK	5150000	1157800	3500000	787000	560	710	0.31	1.00	2.1	0.67	3.2

If the load P is greater than .25C, consult Rexnord Bearing Division.

Speed limits are based on the following:

1. Negligible seal torque (e.g., non-contact seals).
2. Proper operating internal clearance.
3. Adequate lubrication and maintenance (special lubricants and/or more frequent relubrication may be required).
4. Normal room temperature environment and no extraneous heat sources, such that bearing operating temperature does not exceed 100°C *(212°F)*.
5. Equivalent radial load not greater than 7% of C.
6. Axial load, if any, not greater than 20% of radial load.

Table 4 – Series 23000LB, 23000LBK Load Ratings and Speed Limits

Bearing Number		Co Static Load Rating		C Basic Dynamic Load Rating		Speed Limit, RPM		Fa/Fr ≤ e			Fa/Fr > e	
Cylindrical Bore	Tapered Bore	newtons	pounds	newtons	pounds	Grease	Oil	e	X1	Y1	X2	Y2
23044LB	23044LBK	1980000	445100	1090000	245000	950	1200	0.24	1.00	2.8	0.67	4.1
23048LB	23048LBK	2180000	490000	1160000	260000	950	1100	0.25	1.00	2.7	0.67	4.1
23052LB	23052LBK	2580000	580000	1430000	321500	800	950	0.25	1.00	2.7	0.67	4.1
23056LB	23056LBK	2980000	670000	1530000	345000	800	950	0.25	1.00	2.7	0.67	4.1
23060LB	23060LBK	3700000	832000	1920000	431600	670	850	0.24	1.00	2.8	0.67	4.2
23064LB	23064LBK	3850000	865500	1960000	440600	630	800	0.24	1.00	2.8	0.67	4.2
23068LB	23068LBK	4400000	989200	2280000	512600	560	710	0.24	1.00	2.8	0.67	4.2
23072LB	23072LBK	4700000	1056600	2390000	537500	530	670	0.24	1.00	2.8	0.67	4.2
23076LB	23076LBK	5100000	1146500	2500000	562000	530	630	0.22	1.00	3.0	0.67	4.5
23080LB	23080LBK	5900000	1326500	2970000	668000	480	600	0.23	1.00	3.0	0.67	4.4
23084LB	23084LBK	5850000	1315200	2910000	654200	450	560	0.23	1.00	2.9	0.67	4.3
23088LB	23088LBK	6350000	1427500	3150000	708200	430	530	0.23	1.00	2.9	0.67	4.3
23092LB	23092LBK	7100000	1596200	3450000	775600	400	500	0.22	1.00	3.1	0.67	4.6
23096LB	23096LBK	7950000	1787200	3800000	854300	400	480	0.22	1.00	3.1	0.67	4.6
230530LB	230530LBK	9200000	2068200	4400000	989200	340	430	0.22	1.00	3.1	0.67	4.6
230560LB	230560LBK	10700000	2405500	5000000	1124000	320	400	0.22	1.00	3.0	0.67	4.5
230600LB	230600LBK	12200000	2743000	5450000	1225200	300	360	0.21	1.00	3.3	0.67	4.8
230630LB	230630LBK	12700000	2855000	5900000	1326400	280	340	0.22	1.00	3.1	0.67	4.7

If the load P is greater than .25C, consult Rexnord Bearing Division.

Speed limits are based on the following:

1. Negligible seal torque (e.g., non-contact seals).
2. Proper operating internal clearance.
3. Adequate lubrication and maintenance (special lubricants and/or more frequent relubrication may be required).
4. Normal room temperature environment and no extraneous heat sources, such that bearing operating temperature does not exceed 100°C *(212°F)*.
5. Equivalent radial load not greater than 7% of C.
6. Axial load, if any, not greater than 20% of radial load.

Table 5 – Series 23100LB, 23100LBK Load Ratings and Speed Limits

Bearing Number		Co Static Load Rating		C Basic Dynamic Load Rating		Speed Limit, RPM		Fa/Fr ≤ e			Fa/Fr > e	
Cylindrical Bore	Tapered Bore	newtons	pounds	newtons	pounds	Grease	Oil	e	X1	Y1	X2	Y2
23144LB	23144LBK	2710000	609200	1570000	353000	710	950	0.30	1.00	2.2	0.67	3.3
23148LB	23148LBK	3100000	697000	1790000	402500	670	850	0.30	1.00	2.2	0.67	3.3
23152LB	23152LBK	3750000	843000	2160000	485500	600	800	0.32	1.00	2.1	0.67	3.2
23156LB	23156LBK	4000000	899300	2230000	501500	560	750	0.30	1.00	2.2	0.67	3.3
23160LB	23160LBK	4800000	1079000	2670000	600500	500	670	0.31	1.00	2.2	0.67	3.3
23164LB	23164LBK	5500000	1236500	3050000	685700	480	600	0.31	1.00	2.1	0.67	3.2
23168LB	23168LBK	6600000	1483800	3600000	809500	430	560	0.31	1.00	2.1	0.67	3.2
23172LB	23172LBK	7100000	1596200	3800000	854500	400	530	0.31	1.00	2.2	0.67	3.2
23176LB	23176LBK	7600000	1708500	4000000	899200	400	500	0.30	1.00	2.2	0.67	3.3
23180LB	23180LBK	7900000	1776000	4150000	933000	380	480	0.29	1.00	2.3	0.67	3.4
23184LB	23184LBK	9400000	2113200	5000000	1124000	340	450	0.31	1.00	2.2	0.67	3.3
23188LB	23188LBK	10300000	2315500	5300000	1191500	320	430	0.30	1.00	2.2	0.67	3.3
23192LB	23192LBK	10900000	2450500	5700000	1281400	300	400	0.31	1.00	2.2	0.67	3.3
23196LB	23196LBK	11700000	2630500	6050000	1360100	300	380	0.31	1.00	2.2	0.67	3.3
231530LB	231530LBK	14100000	3169800	7150000	1607400	260	340	0.30	1.00	2.2	0.67	3.3
231560LB	231560LBK	15500000	3484500	7850000	1764800	240	320	0.30	1.00	2.3	0.67	3.4
231600LB	231600LBK	17500000	3934000	8750000	1967000	220	280	0.30	1.00	2.3	0.67	3.4
231630LB	231630LBK	19400000	4361100	9600000	2158100	200	260	0.30	1.00	2.3	0.67	3.4

If the load P is greater than .25C, consult Rexnord Bearing Division.

Speed limits are based on the following:

1. Negligible seal torque (e.g., non-contact seals).
2. Proper operating internal clearance.
3. Adequate lubrication and maintenance (special lubricants and/or more frequent relubrication may be required).
4. Normal room temperature environment and no extraneous heat sources, such that bearing operating temperature does not exceed 100°C *(212°F)*.
5. Equivalent radial load not greater than 7% of C.
6. Axial load, if any, not greater than 20% of radial load.

Table 6 – Series 23200LB, 23200LBK Load Ratings and Speed Limits

Bearing Number		Co Static Load Rating		C Basic Dynamic Load Rating		Speed Limit, RPM		Fa/Fr ≤ e			Fa/Fr > e	
Cylindrical Bore	Tapered Bore	newtons	pounds	newtons	pounds	Grease	Oil	e	X1	Y1	X2	Y2
23244LB	23244LBK	3400000	764500	2020000	454000	670	900	0.35	1.00	1.9	0.67	2.9
23248LB	23248LBK	4050000	910500	2440000	548500	630	800	0.37	1.00	1.8	0.67	2.7
23252LB	23252LBK	4550000	1022900	2740000	616000	560	750	0.37	1.00	1.8	0.67	2.7
23256LB	23256LBK	4900000	1101600	2880000	647500	530	670	0.35	1.00	1.9	0.67	2.9
23260LB	23260LBK	5900000	1326400	3400000	764500	480	630	0.35	1.00	1.9	0.67	2.9
23264LB	23264LBK	6900000	1551200	3900000	877000	450	600	0.36	1.00	1.9	0.67	2.8
23268LB	23268LBK	7800000	1753500	4400000	989200	400	530	0.36	1.00	1.9	0.67	2.8
23272LB	23272LBK	8550000	1922100	4800000	1079000	380	500	0.36	1.00	1.9	0.67	2.8
23276LB	23276LBK	9200000	2068500	5150000	1157800	360	480	0.35	1.00	1.9	0.67	2.9
23280LB	23280LBK	10400000	2338000	5800000	1303900	340	450	0.36	1.00	1.9	0.67	2.8
23284LB	23284LBK	11700000	2630500	6450000	1450000	320	430	0.35	1.00	1.9	0.67	2.9
23288LB	23288LBK	12800000	2877500	6900000	1551200	300	400	0.35	1.00	1.9	0.67	2.9
23292LB	23292LBK	13700000	3080000	7350000	1652400	280	380	0.36	1.00	1.9	0.67	2.8
23296LB	23296LBK	14400000	3237500	7850000	1764800	260	360	0.36	1.00	1.9	0.67	2.8

If the load P is greater than .25C, consult Rexnord Bearing Division.

Speed limits are based on the following:

1. Negligible seal torque (e.g., non-contact seals).
2. Proper operating internal clearance.
3. Adequate lubrication and maintenance (special lubricants and/or more frequent relubrication may be required).
4. Normal room temperature environment and no extraneous heat sources, such that bearing operating temperature does not exceed 100°C *(212°F)*.
5. Equivalent radial load not greater than 7% of C.
6. Axial load, if any, not greater than 20% of radial load.

Table 7 – Series 23900LB, 23900LBK Load Ratings and Speed Limits

Bearing Number		Co Static Load Rating		C Basic Dynamic Load Rating		Speed Limit, RPM		Fa/Fr ≤ e			Fa/Fr > e	
Cylindrical Bore	Tapered Bore	newtons	pounds	newtons	pounds	Grease	Oil	e	X1	Y1	X2	Y2
23944LB	23944LBK	1240000	279000	625000	140500	1000	1300	0.18	1.00	3.8	0.67	5.7
23948LB	23948LBK	1300000	292500	635000	143000	950	1200	0.17	1.00	4.0	0.67	6.0

If the load P is greater than .25C, consult Rexnord Bearing Division.

Speed limits are based on the following:

1. Negligible seal torque (e.g., non-contact seals).
2. Proper operating internal clearance.
3. Adequate lubrication and maintenance (special lubricants and/or more frequent relubrication may be required).
4. Normal room temperature environment and no extraneous heat sources, such that bearing operating temperature does not exceed 100°C *(212°F)*.
5. Equivalent radial load not greater than 7% of C.
6. Axial load, if any, not greater than 20% of radial load.

Cylindrical Bore Bearings - Radial Clearances

Series 22200, 22300, 23000, 23100, 23200		Radial Internal Clearance, Inches							
		C2		C0		C3 (basic)		C4	
Basic Size	Bore (mm)	Min	Max	Min	Max	Min	Max	Min	Max
08	40	0.0006	0.0012	0.0012	0.0018	0.0018	0.0024	0.0024	0.0032
09 10	45 50	0.0008	0.0014	0.0014	0.0022	0.0022	0.0030	0.0030	0.0039
11 12 13	55 60 65	0.0010	0.0017	0.0017	0.0026	0.0026	0.0036	0.0036	0.0047
14 15 16	70 75 80	0.0012	0.0020	0.0020	0.0032	0.0032	0.0044	0.0044	0.0057
17 18 19 20	85 90 95 100	0.0014	0.0025	0.0025	0.0039	0.0039	0.0053	0.0053	0.0071
22 24	110 120	0.0017	0.0031	0.0031	0.0048	0.0048	0.0064	0.0064	0.0083
26 28	130 140	0.0020	0.0038	0.0038	0.0057	0.0057	0.0075	0.0075	0.0095
30 32	150 160	0.0024	0.0043	0.0043	0.0065	0.0065	0.0087	0.0087	0.0110
34 36	170 180	0.0026	0.0047	0.0047	0.0071	0.0071	0.0095	0.0095	0.0122
38 40	190 200	0.0028	0.0051	0.0051	0.0079	0.0079	0.0103	0.0103	0.0133
44	220	0.0032	0.0055	0.0055	0.0087	0.0087	0.0114	0.0114	0.0149
48	240	0.0036	0.0059	0.0059	0.0095	0.0095	0.0126	0.0126	0.0165
52 56	260 280	0.0039	0.0067	0.0067	0.0103	0.0103	0.0138	0.0138	0.0180
60	300	0.0044	0.0075	0.0075	0.0110	0.0110	0.0145	0.0145	0.0197
64 68	320 340	0.0047	0.0079	0.0079	0.0122	0.0122	0.0161	0.0161	0.0217
72 76 80	360 380 400	0.0051	0.0087	0.0087	0.0134	0.0134	0.0177	0.0177	0.0236
84 88	420 440	0.0055	0.0094	0.0094	0.0146	0.0146	0.0197	0.0197	0.0260
92 96	460 480	0.0055	0.0102	0.0102	0.0161	0.0161	0.0217	0.0217	0.0283
	530 560	0.0059	0.0110	0.0110	0.0173	0.0173	0.0236	0.0236	0.0307
	600 630	0.0067	0.0122	0.0122	0.0189	0.0189	0.0256	0.0256	0.0335

C2 = Internal clearance less than C0

C0 = Internal clearance

C3 = Internal clearance greater than C0

C4 = Internal clearance greater than C3

Tapered Bore Bearings - Radial Clearances

Series 22200, 22300, 23000, 23100, 23200		Radial Internal Clearance, Inches							
		C2		C0		C3 (basic)		C4	
Basic Size	Bore (mm)	Min	Max	Min	Max	Min	Max	Min	Max
08	40	0.0008	0.0014	0.0014	0.0020	0.0020	0.0026	0.0026	0.0033
09 10	45 50	0.0012	0.0018	0.0018	0.0024	0.0024	0.0031	0.0031	0.0039
11 12 13	55 60 65	0.0014	0.0022	0.0022	0.0030	0.0030	0.0037	0.0037	0.0047
14 15 16	70 75 80	0.0018	0.0028	0.0028	0.0037	0.0037	0.0047	0.0047	0.0059
17 18 19 20	85 90 95 100	0.0020	0.0030	0.0030	0.0043	0.0043	0.0055	0.0055	0.0071
22 24	110 120	0.0025	0.0039	0.0039	0.0053	0.0053	0.0067	0.0067	0.0087
26 28	130 140	0.0030	0.0047	0.0047	0.0063	0.0063	0.0079	0.0079	0.0102
30 32	150 160	0.0033	0.0051	0.0051	0.0071	0.0071	0.0091	0.0091	0.0118
34 36	170 180	0.0037	0.0055	0.0055	0.0079	0.0079	0.0102	0.0102	0.0134
38 40	190 200	0.0041	0.0063	0.0063	0.0087	0.0087	0.0114	0.0114	0.0146
44	220	0.0047	0.0071	0.0071	0.0098	0.0098	0.0126	0.0126	0.0161
48	240	0.0053	0.0079	0.0079	0.0106	0.0106	0.0138	0.0138	0.0177
52 56	260 280	0.0059	0.0087	0.0087	0.0118	0.0118	0.0154	0.0154	0.0193
60	300	0.0065	0.0094	0.0094	0.0130	0.0130	0.0169	0.0169	0.0213
64 68	320 340	0.0075	0.0106	0.0106	0.0142	0.0142	0.0185	0.0185	0.0232
72 76 80	360 380 400	0.0083	0.0118	0.0118	0.0157	0.0157	0.0205	0.0205	0.0256
84 88	420 440	0.0091	0.0130	0.0130	0.0173	0.0173	0.0224	0.0224	0.0283
92 96	460 480	0.0102	0.0146	0.0146	0.0193	0.0193	0.0248	0.0248	0.0311
	530 560	0.0114	0.0161	0.0161	0.0213	0.0213	0.0268	0.0268	0.0343
	600 630	0.0126	0.0181	0.0181	0.0236	0.0236	0.0299	0.0299	0.0386

C2 = Internal clearance less than C0

C0 = Internal clearance

C3 = Internal clearance greater than C0

C4 = Internal clearance greater than C3

Shaft Bearing Seat Diameters

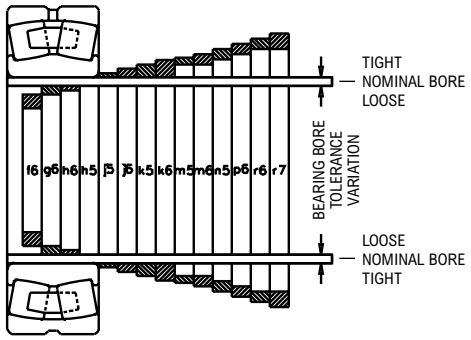

Bearing bore tolerances are in accord with the system of tolerancing established by the International Standards Organization (ISO) and adopted by the American Bearing Manufacturers Association (ABMA) and the American National Standards Institute (ANSI).

A system of limits and fits has been established by ISO for shafts. A portion of this system has been adopted by ABMA to provide flexibility in selecting shaft fits. Shaft fits are designated by a lower case letter and a number, such as h6. The letter indicates the location of the shaft tolerance limits with respect to the nominal bearing bore. The number indicates the size of the tolerance zone.

Shaft fits recommended for various types of applications are listed in the table at right. A graphic relationship of various shaft fits is illustrated in the figure at the left.

Many factors influence the proper fit on the bearing inner ring on a shaft. The magnitude of the load and its direction with respect to bearing inner or outer rings are generally the first factors considered in shaft fit selection. The effects of other factors such as vibration, shock, temperature, speed, etc. are of secondary importance but sometimes need to be considered. Where assembly or disassembly requirements are of prime importance special shaft fits may be required.

Appropriate diameter shafting is determined (as shown) from the tables below.

Class of Fit and Shaft Diameters

Bearing Series 22200, 22300, 23000	Nominal bearing bore and shaft diameter		Bearing bore tolerance#	Bearing/Shaft diameter fits*									
				f6		g6		h6		h5		j5	
				Tolerance		Tolerance		Tolerance		Tolerance		Tolerance	
Basic Size	inches	mm		Fit	Shaft Dia.	Fit	Shaft Dia.	Fit	Shaft Dia.	Fit	Shaft Dia.	Fit	Shaft Dia.
08	1.5748	*40.000*	+.0000 -.0005	.0005L	-0.0010	.0001T	-0.0004	.0005T	0.0000	.0005T	0.0000	.0007T	0.0002
				.0016L	-0.0016	.0010L	-0.0010	.0006L	-0.0006	.0004L	-0.0004	.0002L	-0.0002
09	1.7717	*45.000*	*+0 -12*	*13L*	*-25*	*3T*	*-9*	*12T*	*+0*	*12T*	*+0*	*18T*	*6*
10	1.9685	*50.000*		*41L*	*-41*	*25L*	*-25*	*16L*	*-16*	*11L*	*-11*	*5L*	*-5*
11	2.1654	*55.000*	+.0000 -.0006										
12	2.3622	*60.000*		.0006L	-0.0012	.0002T	-0.0004	.0006T	0.0000	.0006T	0.0000	.0008T	0.0002
13	2.5591	*65.000*		.0019L	-0.0019	.0011L	-0.0011	.0007L	-0.0007	.0005L	-0.0005	.0003L	-0.0003
14	2.7559	*70.000*	*+0 -15*	*15L*	*-30*	*5T*	*-10*	*15T*	*+0*	*15T*	*+0*	*21T*	*6*
15	2.9528	*75.000*		*49L*	*-49*	*29L*	*-29*	*19L*	*-19*	*13L*	*-13*	*7L*	*-7*
16	3.1496	*80.000*											
17	3.3465	*85.000*	+.0000 -.0008										
18	3.5433	*90.000*		.0006L	-0.0014	.0003T	-0.0005	.0008T	0.0000	.0008T	0.0000	.0010T	0.0002
19	3.7402	*95.000*		.0023L	-0.0023	.0014L	-0.0014	.-0009L	-0.0009	.0006L	-0.0006	.0004L	-0.0004
20	3.9370	*100.000*	*+0 -20*	*16L*	*-36*	*8T*	*-12*	*20T*	*+0*	*20T*	*+0*	*26T*	*6*
22	4.3307	*110.000*		58L	-58	34L	-34	22L	-22	15L	-15	9L	*-9*
24	4.7244	*120.000*											
26	5.1181	*130.000*	+.0000 -.0010										
28	5.5118	*140.000*		.0006L	-0.0016	.0004T	-0.0006	.0010T	0.0000	….	….	.0013T	0.0003
30	5.9055	*150.000*		.0026L	-0.0026	.0016L	-0.0016	.0010L	-0.0010	….	….	.0005L	-0.0004
32	6.2992	*160.000*	*+0 -25*	*18L*	*-43*	*11T*	*-14*	*25T*	*+0*	….	….	*32T*	*7*
34	6.6929	*170.000*		68L	-68	39L	-39	*25L*	*-25*	….	….	*11L*	*-11*
36	7.0866	*180.000*											
38	7.4803	*190.000*	+.0000 -.0012	.0008L	-0.0020	.0006T	-0.0006	.0012T	0.0000	….	….	….	….
40	7.8740	*200.000*		.0032L	-0.0032	.0018L	-0.0018	.0012L	-0.0012	….	….	….	….
44	8.6614	*220.000*	*+0 -30*	*20L*	*-50*	*15T*	*-15*	*30T*	*+0*	….	….	….	….
48	9.4488	*240.000*		79L	-79	44L	-44	*29L*	*-29*	….	….	….	….
52	10.2362	*260.000*	+.0000 -.0014	.0008L	-0.0022	.0007T	-0.0007	.0014T	0.0000	….	….	….	….
				.0034L	-0.0034	.0019L	-0.0019	.0012L	-0.0012	….	….	….	….
56	11.0236	*280.000*	*+0 -35*	*21L*	*-56*	*18T*	*-17*	*35T*	*+0*	….	….	….	….
60	11.811	*300.000*		*88L*	*-88*	*49L*	*-49*	*32L*	*-32*	….	….	….	….

1µm = .001 mm

#The arithmetical mean of the largest and smallest single diameter to be within tolerance shown.

Allowable deviations from mean diameter per ANSI/ABMA STD 20, latest printing.

For additional shaft sizes, please consult Rexnord Bearing Engineering for proper fitting practices.

Class of Fit Selection

Operating condition			Examples	Nominal shaft diameter mm	Nominal shaft diameter inches	Class of fit ■	Remarks
Inner ring stationary in relation to direction of load.	All loads	Inner ring has to be easily displaced	Wheel on stationary shaft	All diameters		g6	
		Inner ring does not have to be easily displaced	Tension pulleys and rope sheaves			h6	
Direction of load indeterminate or inner ring rotating in relation to direction of load.	Radial load		Electric apparatus, machine tools, pumps, ventilators, industrial trucks	<=40 40—100 100—200	<=1.57 1.57—3.94 3.94—7.88	j6 k6 m6	When greater accuracy is required, use j5, k5 and m5 for j6, k6, and m6 respectively.
	Light load<=0.08C⬟						
	Normal load >0.08C⬟<=0.18C⬟		Applications in general, electrical motors, turbines pumps, combustion engines, gear transmissions, wood working machines	<=40 40—65 65—100 100—140 140—280 280—500 >500	<=1.57 1.57—2.56 2.56—3.94 3.94—5.52 5.52—11.10 11.10—19.7 >19.7	k5 m5 m6 n6 p6 r6 r7	
	Heavy load>0.18C⬟		Journal boxes for locomotives & other heavyrail vehicles, traction motors	<=40 40—65 65—100 100—140 140—200 >200	<=1.57 1.57—2.56 2.56—3.94 3.94—5.52 5.52—7.88 >7.88	m5 m6 n6 p6 r6 r7	Greater internal clearance may be required.

Bearing/Shafts Diameter Fits*

j6 Tolerance		k5 Tolerance		k6 Tolerance		m5 Tolerance		m6 Tolerance		n6 Tolerance		p6 Tolerance		r6 Tolerance	
Fit	Shaft Dia.	Fit	Shaft Dia.	Fit	Shaft Dia.	Fit	Shaft Dia.	Fit	Shaft Dia.	Fit	Shaft Dia.	Fit	Shaft Dia.	Fit	Shaft Dia.
.0009T	0.0004	.0010T	0.0005	.0012T	0.0007	.0013T	0.0008	.0015T	0.001	.0018T	0.0013	.	.	.	.
.0002L	–.0002	.0001T	0.0001	.0001T	0.0001	.0004T	0.0004	.0004T	0.0004	.0007T	0.0007	.	.	.	.
23T	*11*	*25T*	*13*	*30T*	*18*	*32T*	*20*	*37T*	*25*	*45T*	*33*	.	.	.	.
5L	*–5*	*2T*	*2*	*2T*	*2*	*9T*	*9*	*9T*	*9*	*17T*	*17*	.	.	.	.
.0010T	0.0004	.0012T	0.0006	.0014T	0.0008	.0016T	0.001	.0018T	0.0012	.0021T	0.0015	.0027T	0.021	.	.
.0003L	–.0003	.0001T	0.0001	.0001T	0.0001	.0005T	0.0005	.0005T	0.0005	.0008T	0.0008	.0014T	0.0014	.	.
22T	*12*	*30T*	*15*	*36T*	*21*	*39T*	*24*	*45T*	*30*	*54T*	*39*	*66T*	*51*	.	.
7L	*–7*	*2T*	*2*	*2T*	*2*	*11T*	*11*	*11T*	*11*	*20T*	*20*	*32T*	*32*	.	.
.0013T	0.0005	.0015T	0.0007	.0018T	0.001	.0019T	0.0011	.0022T	0.0014	.0027T	0.0019	.0033T	0.0025	.0037T	0.0029
.0004L	–.0004	.0001T	0.0001	.0001T	0.0001	.0005T	0.0005	.0005T	0.0005	.0010T	0.001	.0016T	0.0016	.0020T	0.002
33T	*13*	*38T*	*18*	*45T*	*25*	*48T*	*28*	*55T*	*35*	*65T*	*45*	*79T*	*59*	*93T*	*73*
9L	*–9*	*3T*	*3*	*3T*	*3*	*13T*	*13*	*13T*	*13*	*23T*	*23*	*37T*	*37*	*51T*	*51*
.0016T	0.006	.0018T	0.0008	.0021T	0.0011	.0023T	0.0013	.0026T	0.0016	.0032T	0.002	.0038T	0.0028	.0045T	0.0035
.0004L	–.0004	.0001T	0.0001	.0001T	0.0001	.0006T	0.0006	.0006T	0.0006	.0012T	0.0011	.0018T	0.0018	.0025T	0.0025
39T	*14*	*46T*	*21*	*53T*	*28*	*58T*	*33*	*65T*	*40*	*77T*	*52*	*93T*	*68*	*115T*	*90*
11L	*–11*	*3T*	*3*	*3T*	*3*	*15T*	*15*	*15T*	*15*	*27T*	*27*	*43T*	*43*	*65T*	*65*
.0019T	0.0007	.0022T	0.001	.0026T	0.0014	.0026T	0.0014	.0030T	0.0018	.0038T	0.0026	.0044T	0.0032	.0054T	0.0042
.0005L	–.0005	.0002T	0.0002	.0002T	0.0002	.0006T	0.0006	.0006T	0.0006	.0014T	0.0014	.0020T	0.002	.0030T	0.003
46T	*16*	*54T*	*24*	*63T*	*33*	*67T*	*37*	*76T*	*46*	*90T*	*60*	*109T*	*79*	*136T*	*106*
16L	*–16*	*4T*	*4*	*4T*	*4*	*17T*	*17*	*17T*	*17*	*31T*	*31*	*50T*	*50*	*77T*	*77*
.0021T	0.0007	.0025T	0.0011	.0028T	0.0014	.0031T	0.0017	.0034T	0.002	.0040T	0.0026	.0048T	0.0034	.0061T	0.0047
.0006L	–.0006	.0002T	0.0002	.0002T	0.0002	.0008T	0.0008	.0008T	0.0008	.0014T	0.0014	.0022T	0.0022	.0035T	0.0035
51T	*16*	*62T*	*27*	*71T*	*36*	*78T*	*43*	*87T*	*52*	*101T*	*66*	*123T*	*88*	*161T*	*126*
16L	*–16*	*4T*	*4*	*4T*	*4*	*20T*	*20*	*20T*	*20*	*34T*	*34*	*56T*	*56*	*94T*	*94*

* Symbol L indicates a loose or clearance fit; Symbol T indicates a tight or interference fit.

■ For solid steel shafts.

⬟ = basic load rating of bearing.

The appropriate shaft diameter for any class of fit can be easily determined by applying the shaft tolerance to the nominal shaft diameter. Example: (Using basic bearing size 08 and fit class f6).

		inches			mm	
Nominal shaft diameter	=	1.5748	1.5748	=	40	40
Shaft diameter tolerance	=	–0.001	–0.0016	=	–0.025	-0.041
Resultant shaft diameter	=	1.5738	1.5732	=	39.975	39.959

Housing Bearing Seat Diameters

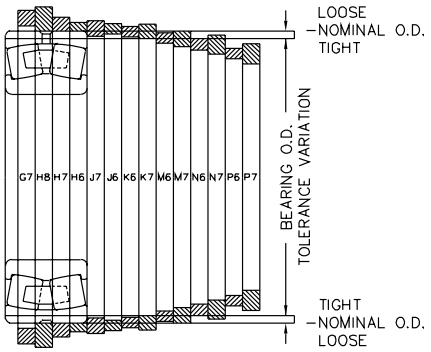

Bearing outside diameter tolerances are in accord with the system of tolerancing established by the International Standards Organization (ISO) and adopted by the American Bearing Manufacturers Association (ABMA) and the American National Standards Institute (ANSI).

A system of limits and fits has been established by ISO for shafts. A portion of this system has been adopted by ABMA to provide flexibility in selecting shaft fits. Housing fits are designated by a capital letter and a number, such as H7. The letter indicates the location of the housing bore tolerance limits with respect to the nominal bearing O.D. The number indicates the size of the tolerance zone.

Housing fits recommended for various types of applications are listed in the table at right. A graphic relationship of various housing fits is illustrated in the figure at the left.

The class of fit is determined by nature of loading (oscillating, vibrating, reversing, etc.), axial movement requirements, temperature conditions, housing material and cross section of housing.

Shaft expansion increases bearing center distances and requires all but one bearing on a shaft to be movable axially in the housing. In most bearings the outer rings are subjected to stationary loads which permit a loose housing fit.

Operating temperature may affect the housing fit, as the housing may dissipate heat rapidly and not expand with the outer ring. However, the loose fit must never be greater than necessary. Excessive looseness results in less accurate shaft centering and additional ring deformation under load.

The appropriate housing bores are determined (as shown) from the tables below.

Class of Fit and Housing Bores

Bearing Series				Nominal bearing O.D. and housing bore		Bearing bore tolerance #	Bearing/Housing diameter fits^									
							G7		H8		H7		H6		J7	
222, 232	223	230	231				Tolerance		Tolerance		Tolerance		Tolerance		Tolerance	
Basic Size				inches	mm		Fit	Housing Bore	Fit	Housing Bore	Fit	Housing Bore	Fit	Housing Bore	Fit	Housing Bore
09	..	..	..	3.3465	85.000	+.0000 -.0006	.0005L	0.0005	.0000	+.0000	.0000	+.0000	.0000	+.0000	.0005T	-0.0005
10	08	..	..	3.5433	90.000		.0025L	0.0019	.0028L	0.0022	.0020L	0.0014	.0015L	0.0009	.0015L	0.0009
11	09	..	..	3.9370	100.000	+0 -15	12L	12	0	+0	0	+0	0	+0	13T	-13
12	10	..	..	4.3307	110.000		62L	47	69L	54	50L	35	37L	22	37L	22
13	11	..	..	4.7244	120.000											
14	..	..	..	4.9312	125.000	+.0000 -.0008	.0006L	0.0006	.0000	+.0000	.0000	+.0000	.0000	+.0000	.0006T	-0.0006
15	12	..	..	5.1181	130.000		.0030L	0.0022	.0033L	0.0025	.0024L	0.0016	.0018L	0.0010	.0018L	0.0010
16	13	..	..	5.5118	140.000	+0 -20	14L	14	0	+0	0	+0	0	+0	14T	-14
17	14	..	..	5.9055	150.000		74L	54	83L	63	60L	40	45L	25	46L	26
18	15	..	..	6.2992	165.000	+.0000 -.0010	.0006L	0.0006	.0000	+.0000	.0000	+.0000	.0000	+.0000	.0006T	-0.0006
19	16	..	..	6.6929	170.000		.0032L	0.0022	.0035L	0.0025	.0026L	0.0016	.0020L	0.0010	.0020L	0.0010
						+0 -25	14L	14	0	+0	0	+0	0	+0	14T	-14
20	17	24	22	7.0866	180.000		79L	54	88L	63	65L	40	50L	25	51L	26
..	18	..	..	7.4803	190.000	+.0000 -.0012										
22	19	26	24	7.8740	200.000											
..	..	28	26	8.2677	210.000		.0006L	0.0006	.0000	+.0000	.0000	+.0000	.0000	+.0000	.0007T	-0.0007
24	20	..	..	8.4646	215.000		.0036L	0.0024	.0040L	0.0028	.0030L	0.0018	.0024L	0.0012	.0023L	0.0011
..	..	30	28	8.8583	225.000	+0 -30	15L	15	0	+0	0	+0	0	+0	16T	-16
26	..	..	..	9.0551	230.000		91L	61	102L	72	76L	46	59L	29	60L	30
..	22	32	..	9.4488	240.000											
28	..	..	30	9.8425	250.000											
..	24	34	..	10.2362	260.000	+.0000 -.0014										
30	..	..	32	10.6299	270.000		.0007L	0.0007	.0000	+.0000	.0000	+.0000	.0000	+.0000	.0007T	-0.0007
..	26	36	34	11.0236	280.000		.0041L	0.0027	.0044L	0.0030	.0034L	0.0020	.0026L	0.0012	.0027L	0.0013
32	..	38	..	11.4173	290.000	+0 -35	17L	17	0	+0	0	+0	0	+0	16T	-16
..	28	..	36	11.8110	300.000		104L	69	116L	81	87L	52	67L	32	71L	36
34	..	40	..	12.2047	310.000											
36	30	..	38	12.5984	320.000	+.0000 -.0016										
38	32	44	40	13.3858	340.000		.0007L	0.0007	.0000	+.0000	.0000	+.0000	.0000	+.0000	.0007L	-0.0007
40	34	48	..	14.1732	360.000		.0045L	0.0029	.0051L	0.0035	.0038L	0.0022	.0030L	0.0014	.0031L	0.0015
..	..	..	44	14.5669	370.000	+0 -40	18L	18	0	+0	0	+0	0	+0	18T	-18
..	36	..	..	14.9606	380.000		115L	75	129L	89	97L	57	76L	36	79L	39
44	38	52	48	15.7480	400.000											
..	40	56	..	16.5354	420.000	+.0000 -.0018	.0008L	0.0008	.0000	+.0000	.0000	+.0000	.0000	+.0000	.0009T	-0.0009
48	..	..	..	17.3228	440.000		.0051L	0.0033	.0056L	0.0038	.0043L	0.0025	.0034L	0.0016	.0034L	0.0016
						+0 -45	20L	20	0	+0	0	+0	0	+0	20T	-20
..	44	60	..	18.1102	460.000		128L	83	142L	97	108L	63	85L	40	88L	43

The arithmetical mean of the largest and smallest single diameter to be within tolerance shown.

Allowable deviations from mean diameter per ANSI/ABMA STD 20, latest printing.

^ Symbol L indicates a loose or clearance fit. Symbol T indicates a tight or interference fit.

The appropriate housing bore for any class of fit can be easily determined by applying the housing tolerance to the nominal housing bore.

Example: (Using basic bearing size 09 and fit class G7).

For larger bearing sizes please consult Rexnord Bearing Engineering for proper housing fit practices.

		inches			mm	
Nominal housing bore	=	3.3465	3.3465	=	*85.000*	*85.000*
Shaft bore tolerance	=	+ .0005	+ .0019	=	*+ 0.012*	*+ 0.047*
Resultant housing bore	=	3.3470	3.3484	=	*85.012*	*85.047*

Class of Fit Selection

Housing Construction	Operating Condition			Examples	Class of Fit ■	Remarks
Housing not split radially	Housing rotating in relation to direction of load	Heavy loads on bearings in thin-walled housing		Supporting wheels in cranes, wheel hubs with roller bearings, crank bearings	P6*	Outer ring not axially displaceable
		Normal and heavy loads		Wheel hubs with roller bearings, crank bearings	N6*	
		Light loads		Conveyor rollers, rope sheaves, tension pulleys	M6*	
	Direction of load indeterminate	Heavy shock loads		Electrical fraction motors		
		Heavy and normal loads where outer ring does not have to be axially diplaceable		Electrical motors, pumps , crankshaft main bearings	K6*	Outer ring, as a rule, not axially displaceable
Housing split or housing not split radially		Normal and light loads where displaceablity of outer ring is desirable			J6*	Outer ring as a rule, axially displaceable
	Housing stationary in relation to direction of load	Shock loads, a temporary complete unloading		Journal boxes for rail vehicles		
		All loads	Housing not split radially	Bearing applications in general, journal boxes for rail vehicles	H6*	Outer ring easily displacecable axially
			Housing split radially	Line shafting	H7	
		Heat supplied through shaft		Dryer cylinders	G7	

Bearing/Housing Diameter Fits ^

J6		K6		K7		M6		M7		N6		N7		P7	
Tolerance		Tolerance		Tolerance		Tolerance		Tolerance		Tolerance		Tolerance		Tolerance	
Fit	Housing Bore	Fit	Housing Bore	Fit	Housing Bore	Fit	Housing Bore	Fit	Housing Bore	Fit	Housing Bore	Fit	Housing Bore	Fit	Housing Bore
.0002T	–.0002	.0007T	–.0007	.0010T	–.0010	.0012T	–.0012	.0014T	–.0014	.0016T	–.0016	.0018T	–.0018	.0025T	–.0025
.0013L	0.0007	.0008L	0.0002	.0010L	0.0004	.0003L	–.0003	.0006L	0	.0001T	–.0007	.0002L	–.0004	.0005T	–.0011
6T	–6	18T	–18	25T	–25	28T	–28	35T	–35	38T	–38	45T	–45	59T	–59
31L	16	19L	4	25L	10	9L	–6	15L	0	1T	–16	5L	–10	9T	–24
.0003T	0.0003	.0008T	–.0008	.0011T	–.0011	.0013T	–.0013	.0016T	–.0016	.0019T	–.0019	.0022T	–.0022	.0028T	–.0028
.0015L	0.0007	.0010L	0.0002	.0013L	0.0005	.0005L	–.0003	.0008L	0	.0001T	–.0009	.0002L	–.0006	.0004T	–.0012
7T	–7	21T	–21	28T	–28	33T	–33	40T	–40	45T	–45	52T	–52	68T	–68
38L	18	24L	4	32L	12	12L	–8	20L	0	0T	–20	8L	–12	8T	–28
.0003T	–.0003	.0008T	–.0008	.0011T	–.0011	.0013T	–.0013	.0016T	–.0016	.0019T	–.0019	.0022T	–.0022	.0028T	–.0028
.0017L	0.0007	.0012L	0.0002	.0015L	0.0005	.0007L	–.0003	.0010L	0	.0001L	–.0009	.0004L	–.0006	.0002T	–.0012
7T	–7	21T	–21	28T	–28	33T	–33	40T	–40	45T	–45	52T	–52	68T	–68
43L	18	29L	4	37L	12	17L	–8	25L	0	5L	–20	13L	–12	3T	–28
.0003T	–.0003	.0010T	–.0010	.0013T	–.0013	.0015T	–.0015	.0018T	–.0018	.0022T	–.0022	.0026T	–.0026	.0032T	–.0032
.0021L	0.0009	.0014L	0.0002	.0017L	0.0005	.0009L	–.0003	.0012L	0	.0002L	–.0010	.0004L	–.0008	.0002T	–.0014
7T	–7	24T	–24	33T	–33	37T	–37	46T	–46	51T	–51	60T	–60	79T	–79
52L	22	35L	5	43L	13	22L	–8	30L	0	8L	–22	16L	–14	3T	–33
.0003T	–.0003	.0010T	–.0010	.0014T	–.0014	.0016T	–.0016	.0020T	–.0020	.0023T	–.0023	.0028T	–.0028	.0034T	–.0034
.0023L	0.0009	.0016L	0.0002	.0020L	0.0006	.0010L	–.0004	.0014L	0	.0003L	–.0011	.0006L	–.0008	0	–.0014
7T	–7	22T	–27	36T	–36	41T	–41	52T	–52	57T	–57	66T	–66	88T	–88
60L	25	40L	5	51L	16	26L	–9	35L	0	10L	–25	21L	–14	1T	–36
.0003T	–.0003	.0012T	–.0012	.0016T	–.0016	.0018T	–.0018	.0022T	–.0022	.0026T	–.0026	.0030T	–.0030	.0039T	–.0039
.0027L	0.0011	.0018L	0.0002	.0022L	0.0006	.0012L	–.0004	.0016L	0	.0004L	–.0012	.0008L	–.0008	.0001T	–.0017
7T	–7	29T	–29	40T	–40	46T	–46	57T	–57	62T	–62	73T	–73	98T	–98
69L	29	47L	7	57L	17	30L	–10	40L	0	14L	–26	26L	–16	1T	–41
.0003T	–.0003	.0012T	–.0012	.0018T	–.0018	.0020T	–.0020	.0025T	–.0025	.0028T	–.0028	.0034T	–.0034	.0044T	–.0044
.0031L	0.0013	.0022L	0.0004	.0025L	0.0007	.0014L	–.0004	.0018L	0	.0006L	–.0012	.0009L	–.0009	.0001T	–.0019
7T	–7	32T	–32	45T	–45	50T	–50	63T	–63	67T	–67	80T	–80	108T	–108
78L	33	53L	8	63L	18	35L	–10	45L	0	18L	–27	28L	–17	0	–45

■ For cast iron or steel housings. For housings of light metal, select tolerances which give slightly tighter fits than those shown.

* Where wider tolerances are permissible P7, N7, M7, K7, J7 and H7 may be used for P6, N6, M6, K6, J6 and H6 respectively.

Series A20000S Selection Guide

A20000S single row angular contact spherical roller bearings are suitable for a wide variety of mounting arrangements. In the application of these bearings, it is important to consider that radial loads produce a thrust reaction which must be opposed by another force…usually the thrust reaction from another bearing. This force maintains the bearing rings in their correct operating position.

Normally, two single row angular contact bearings are mounted opposed to one another on a common shaft. As thrust or thrust reactions are always present, it is advisable to calculate both bearing lives concurrently.

The selection procedures and rating formulas shown here are in agreement with The American Bearing Manufacturers Association Standards and ANSI/ ABMA STD 11-1990. Ratings are based on fatigue life. The Rating Life L10 or fatigue life at 90% reliability is the usual basis for bearing selection.

To assure a satisfactory bearing application, fitting practice, mounting, lubrication, sealing, static rating, housing strength, operating conditions and maintenance must be considered.

Steps for Selection

Step 1

Determine an appropriate L10 design life.

Type of service	Operating time, hours per year	Design life, years	L10 design life, hours
Light seasonal usage	500 to 750	3-5	3,000
Heavy seasonal usage	1,400 to 1,600	4-6	8,000
Industrial—8 hour shift	2,000	10	20,000
Industrial—16 hour shift	4,000	10	40,000
Industrial—continuous	8,700	10	80,000 to 100,000
Continuous—high reliability	—	—	120,000 to 300,000

Step 2

Determine a required $\left(\frac{C}{P}\right)$ from Table 1.

Step 3

Determine a required shaft diameter and make a temporary selection for each bearing to fit this shaft.

Step 4

Calculate each induced thrust reaction TF from the radial loads Fr on each bearing.

$$TF = \frac{0.5\ Fr}{Y2}$$

This reaction is directed along the shaft and tends to separate the individual inner ring and roller assemblies from their outer rings.

Step 5

Calculate resultant bearing thrust load Fa.

$$F_a = T_F + T$$

T_F is the thrust reaction from the opposite single row angular contact bearing. The applied thrust load T is positive (+) if in the same direction as T_F, and negative (–) if in the opposite direction. If F_a is negative, substitute zero for Fa.

Step 6

Calculate the ratio of the resultant bearing thrust load F_a to the radial load F_r for each bearing.

Step 7

Calculate the equivalent radial load P for both trial bearings.

$$P = XFr + YFa$$

If $\frac{F_a}{F_r}$ is equal to or less than e, then

$$P = X1Fr + Y1Fa \quad \text{where} \quad X_1 = 1.0,\ Y_1 = 0$$

If $\frac{F_a}{F_r}$ is greater than e, then P = X2Fr + Y2Fa.

For values of e, X2, and Y2, see the bearing rating table.

Step 8

Calculate the required C rating of each bearing to verify the trial selections.

$$\text{required } C = \left(\frac{C}{P}\right) P \text{ using } \left(\frac{C}{P}\right) \text{ from Step 2}$$

Consult the bearing rating table to see if the selected bearings meet or exceed the required C in each case.

Selection

Symbols for formulas:

C = basic load rating, pounds (or newtons)
Co = static load rating, pounds (or newtons)
e = a reference value
Fa = thrust load, pounds (or newtons)
Fr = radial load, pounds (or newtons)
L_{10} = rating life, hours
n = speed, revolutions per minute
P = equivalent radial load, pounds (or newtons)
X = radial factor
Y = thrust factor

Table 1 • Relation of L_{10} life and speed to $\left(\frac{C}{P}\right)$

Bearing Life Hours L10	Speed, n								
	50	100	200	300	400	500	600	700	800
3000	1.93	2.38	2.93	3.31	3.61	3.86	4.07	4.27	4.44
4000	2.11	2.59	3.19	3.61	3.93	4.20	4.44	4.65	4.84
5000	2.25	2.77	3.42	3.86	4.20	4.50	4.75	4.97	5.18
6000	2.38	2.93	3.61	4.07	4.44	4.75	5.02	5.25	5.47
8000	2.59	3.19	3.93	4.44	4.84	5.18	5.47	5.73	5.96
10000	2.77	3.42	4.20	4.75	5.18	5.54	5.85	6.12	6.37
12000	2.93	3.61	4.44	5.02	5.47	5.85	6.18	6.47	6.73
14000	3.07	3.78	4.65	5.25	5.73	6.12	6.47	6.77	7.05
16000	3.19	3.93	4.84	5.47	5.96	6.37	6.73	7.05	7.34
18000	3.31	4.07	5.02	5.66	6.18	6.60	6.97	7.30	7.60
20000	3.42	4.20	5.18	5.85	6.37	6.81	7.20	7.54	7.85
25000	3.65	4.50	5.54	6.25	6.81	7.29	7.70	8.06	8.39
30000	3.86	4.75	5.85	6.60	7.20	7.70	8.13	8.51	8.86
35000	4.04	4.97	6.12	6.92	7.54	8.06	8.51	8.92	9.28
40000	4.20	5.18	6.37	7.20	7.85	8.39	8.86	9.28	9.66
45000	4.36	5.36	6.60	7.46	8.13	8.69	9.18	9.61	10.00
50000	4.50	5.54	6.81	7.70	8.39	8.97	9.48	9.92	10.30
60000	4.75	5.85	7.20	8.13	8.86	9.48	10.00	10.50	10.90
70000	4.97	6.12	7.54	8.51	9.28	9.92	10.50	11.00	11.40
80000	5.18	6.37	7.85	8.86	9.66	10.30	10.90	11.40	11.90
90000	5.36	6.60	8.13	9.18	10.00	10.70	11.30	11.80	12.30
100000	5.54	6.81	8.39	9.48	10.30	11.00	11.70	12.20	12.70
150000	6.25	7.70	9.48	10.70	11.70	12.50	13.20	13.80	14.40
200000	6.81	8.39	10.30	11.70	12.70	13.60	14.40	15.00	15.70
	Speed, n								
	900	1000	1200	1500	1800	2400	3000	3600	6000
3000	4.60	4.75	5.02	5.36	5.66	6.18	6.60	6.97	8.13
4000	5.02	5.18	5.47	5.85	6.18	6.73	7.20	7.60	8.86
5000	5.36	5.54	5.85	6.25	6.60	7.20	7.70	8.13	9.48
6000	5.66	5.85	6.18	6.60	6.97	7.60	8.13	8.59	10.00
8000	6.18	6.37	6.73	7.20	7.60	8.29	8.86	9.36	10.90
10000	6.60	6.81	7.20	7.70	8.13	8.86	9.48	10.00	11.70
12000	6.97	7.20	7.60	8.13	8.59	9.36	10.00	10.60	12.30
14000	7.30	7.54	7.96	8.51	8.99	9.80	10.50	11.10	12.90
16000	7.60	7.85	8.29	8.86	9.36	10.20	10.90	11.50	13.40
18000	7.88	8.13	8.59	9.18	9.70	10.60	11.30	11.90	13.90
20000	8.13	8.39	8.86	9.48	10.00	10.90	11.70	12.30	14.40
25000	8.69	8.97	9.48	10.10	10.70	11.70	12.50	13.20	15.40
30000	9.18	9.48	10.00	10.70	11.30	12.30	13.20	13.90	16.20
35000	9.61	9.92	10.50	11.20	11.80	12.90	13.80	14.60	17.00
40000	10.00	10.30	10.90	11.70	12.30	13.40	14.40	15.20	17.70
45000	10.40	10.70	11.30	12.10	12.80	13.90	14.90	15.70	18.30
50000	10.70	11.00	11.70	12.50	13.20	14.40	15.40	16.20	18.90
60000	11.30	11.70	12.30	13.20	13.90	15.20	16.20	17.10	20.00
70000	11.80	12.20	12.90	13.80	14.60	15.90	17.00	17.90	20.90
80000	12.30	12.70	13.40	14.40	15.20	16.50	17.70	18.70	21.80
90000	12.80	13.20	13.90	14.90	15.70	17.10	18.30	19.40	22.60
100000	13.20	13.60	14.40	15.40	16.20	17.70	18.90	20.00	23.30
150000	14.90	15.40	16.20	17.30	18.30	20.00	21.40	22.60	26.30
200000	16.20	16.70	17.70	18.90	20.00	21.80	23.30	24.60	28.70

Basic Formula

$$\left(\frac{C}{P}\right) = \left(\frac{L_{10} \times n \times 60}{1{,}000{,}000}\right)^{3/10}$$

$$L_{10} = \frac{\left(\frac{C}{P}\right)^{10/3} \times 1{,}000{,}000}{n \times 60}$$

Life Expectancy (pair of bearings)

To calculate the Rating Life L_{10} of any pair of selected or trial bearings:

Step 1

Calculate each induced thrust reaction T_F from the radial loads F_r on each bearing.

$$T_F = \frac{0.5\ F_r}{Y_2}$$

This reaction is directed along the shaft and tends to separate the individual inner ring and roller assemblies from their outer rings.

Step 2

Calculate each resultant bearing thrust load Fa.

$$F_a = T_F + T$$

T_F is the thrust reaction from the opposite single row angular contact bearing. The applied thrust load T is positive (+) if in the same direction as TF, and negative (–) if in the opposite direction. If Fa is negative, substitute zero for Fa.

Step 3

Calculate the ratio of the resultant bearing,thrust load F_a to the radial load F_r for each bearing.

Step 4

Calculate the equivalent radial load P for both trial bearings. P = XFr + YFr

If $\frac{F_a}{F_r}$ is equal to or less than e, then
P = X1Fr + Y1Fa where
If $\frac{F_a}{F_r}$ is greater than e, then
P = X2Fr + Y2Fa.

For values of e, X2, and Y2 see the bearing rating table.

Step 5

Calculate each ratio of the bearing basic load rating C to its equivalent radial load.

$$\left(\frac{C}{P}\right)$$

Step 6

Approximate life expectancy of each bearing from Table 1.

Life Adjustment

The Rating Life, L10, may be modified for some applications in accordance with the formula

$$L_n = a_1 a_2 a_3 L_{10}$$

where Ln = Adjusted life for (100-n) % reliability,
a1 = Life adjustment factor for reliability
a2 = Life adjustment factor for material and processing
a3 = Life adjustment factor for operating conditions.

For most normal applications, all factors will be taken as 1, and the Rating Life used as the selection basis or life estimate. In addition, as long as standard catalog bearings are used, a2 will be normally set equal to one. The factor a3 covers such things as lubrication, misalignment, and temperature.

Some conditions that could yield a3 significantly different than unity include speeds less than 20000 DN or greater than 200000 DN, temperatures below –40°F (–40°C) or above 275°F (135°C). For other possible conditions, as well as additional information on life adjustment factors, consult Rexnord Bearing Division.

Table 2 • Series A20000S Load Ratings and Speed Limits

Bearing number	Weight		Co Static Load Rating		C Basic Load Rating		Approx. Speed Limit RPM^	e	X2	Y2
	Kilograms	pounds	newtons	pounds	newtons	pounds				
A22100S	0.2	0.5	36 500	8210	33 300	7480	7100	0.51	0.40	1.17
A22150S	0.3	0.6	46 600	10500	37 800	8510	5700	0.44	0.40	1.37
A22196S	0.5	1.1	73 800	16600	55 100	12400	4500	0.40	0.40	1.49
A23225S	0.6	1.4	98 800	22200	68 500	15400	4000	0.40	0.40	1.49
A22262S	0.9	2.0	136 100	30600	93 200	21000	3500	0.37	0.40	1.61
A23275S	2.1	4.7	187 700	42200	150 300	33800	2850	0.40	0.40	1.49
A22300S	1.4	3.0	159 200	35800	108 500	24400	3100	0.38	0.40	1.59
A23300S	2.3	5.0	201 500	45300	132 600	29800	2650	0.38	0.40	1.57
A23334S	2.0	4.4								
A22413S	4.1	9.0	395 100	88800	244 700	55000	2100	0.38	0.40	1.60

Please consult for availability.

^ For oil lubrication only. For grease lubrication, use 75% of these values.

Table 3 • Series A20000, A20000M Load Ratings and Speed Limits

Bearing Number	Weight		Co Static Load Rating		C Basic Load Rating		Approximate speed limit RPM*	e	$\frac{F_a}{F_r} \le e$		$\frac{F_a}{F_r} > e$	
	kilograms	pounds	newtons	newtons	newtons	pounds			X1	Y1	X2	Y2
A22100	0.4	1.0										
A22100M	0.4	1.0	66 100	14900	51 200	11500	7100	0.51	1.00	1.32	0.67	1.96
A22112	0.4	0.9										
A22112M	0.4	0.9										
A22118	0.6	1.3	80 500	18100	60 900	13700	6200	0.48	1.00	1.40	0.67	2.08
A22118M	0.6	1.4										
A22125	0.5	1.1										
A22125M	0.5	1.2										
A22137	0.6	1.3	93 200	20900	64 900	14600	5700	0.44	1.00	1.54	0.67	2.29
A22137M	0.6	1.4										
A22150	0.5	1.2										
A22150M	0.6	1.3										
A22177	0.9	2.0	127 700	28700	89 800	20200	4800	0.45	1.00	1.51	0.67	2.25
A22177M	0.9	2.0										
A22196	1.0	2.1	147 700	33200	94 300	21200	4500	0.40	1.00	1.68	0.67	2.50
A22196M	1.0	2.3										
A23196	1.4	3.1	189 000	42500	130 300	29300	4200	0.45	1.00	1.50	0.67	2.24
A23196M	1.5	3.3										
A24196	2.0	4.3	245 500	55200	164 600	37000	3850	0.48	1.00	1.39	0.67	2.07
A24196M	2.1	4.7										
A23200	1.4	3.2										
A23200M	1.5	3.3	197 500	44400	117 400	26400	4000	0.40	1.00	1.68	0.67	2.50
A23225	1.3	2.8										
A23225M	1.3	2.9										
A24236	1.8	3.9	238 000	53500	139 700	31400	3600	0.38	1.00	1.80	0.67	2.68
A24236M	2.0	4.3										
A22262	1.9	4.2	272 700	61300	159 700	35900	3500	0.37	1.00	1.81	0.67	2.70
A23262	2.9	6.5	249 400	67300	194 400	43700	3250	0.42	1.00	1.62	0.67	2.42
A23262M	3.1	6.9										
A23275	4.2	9.3	375 000	84300	257 500	57900	2850	0.40	1.00	1.67	0.67	2.49
A23275M	4.4	9.8										
A22275	3.0	6.6	318 000	71500	185 900	41800	3100	0.38	1.00	1.79	0.67	2.67
A22275M	3.1	6.8										
A22295	2.7	6.0										
A22295M	2.8	6.2										
A23334	4.0	8.9	403 400	90700	226 800	51000	2650	0.38	1.00	1.77	0.67	2.64
A23334M	4.3	9.4										
A22343	4.3	9.4	516 000	116000	274 000	61600	2600	0.43	1.00	1.57	0.67	2.33
A22343M	4.4	9.8										
A22351	4.9	10.9										
A22351M	5.1	11.3										
A22362	4.7	10.4										
A22362M	4.9	10.8										
A24374	7.5	16.0	609 400	137000	351 800	79100	2200	0.36	1.00	1.88	0.67	2.79
A22354	9.6	21.1										
A22354M	10.0	22.1										
A22400	8.6	18.9	790 200	178000	419 400	94300	2100	0.38	1.00	1.80	0.67	2.68
A22400M	8.8	19.3										
A22413	8.4	18.6										
A22413M	8.7	19.1										
A23472	13.6	30.0	944 700	212000	520 400	117000	1800	0.37	1.00	1.83	0.67	2.72

* For oil lubrication only. For grease lubrication, use 75% of these values.

22200LB, 22200LBK

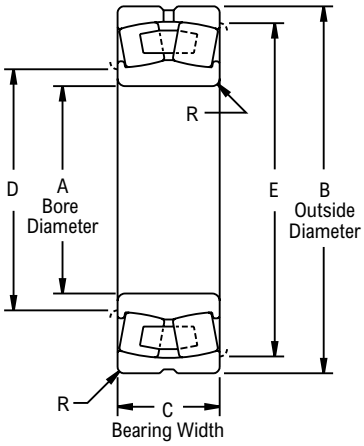

Cylindrical Bore

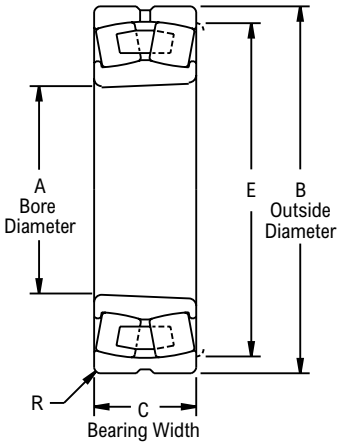

Tapered Bore

Product Features

Cylindrical or Tapered bore
Roller riding retainers
Self-aligning
High Capacity
See Features and Benefits for additional info on page 256.

Bearing Dimensions

Cylindrical Part Number	Tapered Part Number	A Bore Diameter	B Outside Diameter	C Bearing Width	D	E	R	Approx. Weight
22209LBC3	22209LBKC3	1.7717	3.3465	0.9055	2.10	3.00	0.039	1.30
		45.00	*85.00*	*23.00*	*53*	*76*	*1.00*	
22210LBC3	22210LBKC3	1.9685	3.5433	0.9055	2.30	3.20	0.039	1.40
		50.00	*90.00*	*23.00*	*58*	*81*	*1.00*	
22211LBC3	22211LBKC3	2.1654	3.9370	0.9843	2.60	3.60	0.059	1.90
		55.00	*100.00*	*25.00*	*66*	*91*	*1.50*	
22212LBC3	22212LBKC3	2.3622	4.3307	1.1024	2.80	4.00	0.059	2.60
		60.00	*110.00*	*28.00*	*71*	*102*	*1.50*	
22213LBC3	22213LBKC3	2.5591	4.7244	1.2205	2.90	4.40	0.059	3.40
		65.00	*120.00*	*31.00*	*74*	*112*	*1.50*	
22214LBC3	22214LBKC3	2.7559	4.9213	1.2205	3.10	4.60	0.059	3.70
		70.00	*125.00*	*31.00*	*79*	*117*	*1.50*	
22215LBC3	22215LBKC3	2.9528	5.1181	1.2205	3.30	4.80	0.059	3.90
		75.00	*130.00*	*33.00*	*84*	*122*	*1.50*	
22216LBC3	22216LBKC3	3.1496	5.5118	1.2992	3.50	5.10	0.079	4.90
		80.00	*140.00*	*36.00*	*89*	*130*	*2.00*	
22217LBC3	22217LBKC3	3.3465	5.9055	1.4173	3.70	5.50	0.079	6.10
		85.00	*150.00*	*40.00*	*94*	*140*	*2.00*	
22218LBC3	22218LBKC3	3.5433	6.2992	1.5748	3.90	5.90	0.079	7.60
		90.00	*160.00*	*43.00*	*99*	*150*	*2.00*	
22219LBC3	22219LBKC3	3.7402	6.6929	1.6929	4.20	6.20	0.079	9.50
		95.00	*170.00*	*46.00*	*107*	*157*	*2.00*	
22220LBC3	22220LBKC3	3.9370	7.0866	1.8110	4.40	6.60	0.079	11.40
		100.00	*180.00*	*53.00*	*112*	*168*	*2.00*	
22222LBC3	22222LBKC3	4.3307	7.8740	2.0866	4.80	7.40	0.079	16.60
		110.00	*200.00*	*58.00*	*122*	*188*	*2.00*	
22224LBC3	22224LBKC3	4.7244	8.4646	2.2835	5.20	8.00	0.079	20.20
		120.00	*215.00*	*64.00*	*132*	*203*	*2.00*	
22226LBC3	22226LBKC3	5.1181	9.0551	2.5197	5.70	8.50	0.098	25.10
		130.00	*230.00*	*64.00*	*145*	*216*	*2.50*	
22228LBC3	22228LBKC3	5.5118	9.8425	2.6772	6.10	9.30	0.098	32.40
		140.00	*250.00*	*68.00*	*155*	*236*	*2.50*	

Continued...

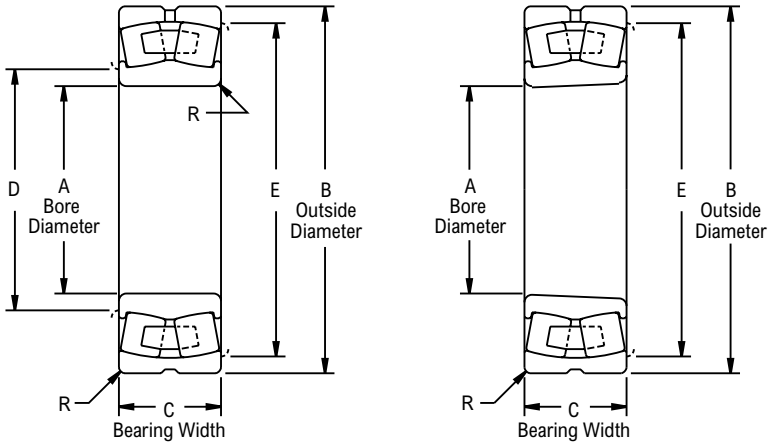

Cylindrical Bore

Tapered Bore

Continued...

Bearing Dimensions

Cylindrical Part Number	Tapered Part Number	A Bore Diameter	B Outside Diameter	C Bearing Width	D	E	R	Approx. Weight
22230LBC3	22230LBKC3	5.9055	10.6299	2.8740	6.50	10.10	0.098	40.90
		150.00	*270.00*	*73.00*	*165*	*257*	*2.50*	
22232LBC3	22232LBKC3	6.2992	11.4173	3.1496	6.90	10.90	0.098	52.00
		160.00	*290.00*	*80.00*	*175*	*277*	*2.50*	
22234LBC3	22234LBKC3	6.6929	12.2047	3.3858	7.40	11.50	0.118	64.60
		170.00	*310.00*	*86.00*	*188*	*292*	*3.00*	
22236LBC3	22236LBKC3	7.0866	12.5984	3.3858	7.80	11.90	0.118	67.40
		180.00	*320.00*	*86.00*	*198*	*302*	*3.00*	
22238LBC3	22238LBKC3	7.4803	13.3858	3.6220	8.20	12.70	0.118	81.90
		190.00	*340.00*	*92.00*	*208*	*323*	*3.00*	
22240LBC3	22240LBKC3	7.8740	14.1732	3.8583	8.60	13.50	0.118	95.00
		200.00	*360.00*	*98.00*	*218*	*343*	*3.00*	
22244LBC3	22244LBKC3	8.6614	15.7480	4.2520	9.40	15.10	0.118	133.00
		220.00	*400.00*	*108.00*	*239*	*384*	*3.00*	
22248LBC3	22248LBKC3	9.4488	17.3228	4.7244	10.60	16.30	0.157	175.70
		240.00	*440.00*	*120.00*	*269*	*414*	*4.00*	

Additional Notes

Please call 1-866-REXNORD for availability

Tapered bore, 1:12 on diameter

Dimension “R” is the largest fillet radius that will clear bearing corners

For the Selection Guide Load Ratings and Speed Limits, see the Link-Belt Spherical Roller Bearings Engineering section on pages 258 - 273.

For shaft bearing seat diameters, see Link-Belt Spherical Roller Bearings Shaft & Housing Seat Diameters section on pages 266 - 269.

Note: Dimensions subject to change. Certified dimensions of ordered material furnished on request.

22300LB, 22300LBK

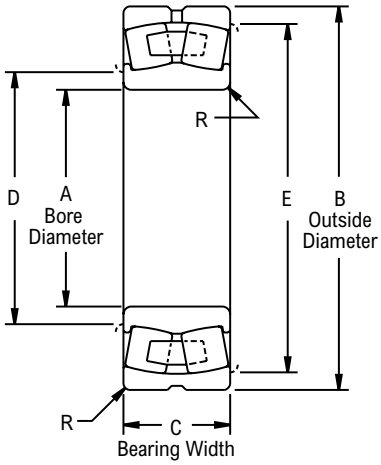

Cylindrical Bore

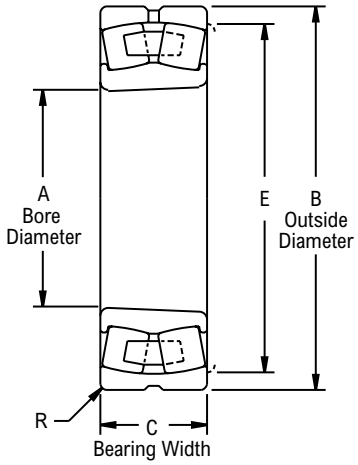

Tapered Bore

Product Features

- Cylindrical or Tapered bore
- Roller riding retainers
- Self-aligning
- Extra high capacity
- See Features and Benefits for additional info on page 256.

Bearing Dimensions

Cylindrical Part Number	Tapered Part Number	A Bore Diameter	B Outside Diameter	C Bearing Width	D	E	R	Approx. Weight
22308LBC3	22308LBKC3	1.5748	3.5433	1.2992	1.90	3.20	0.059	2.80
		40.00	*90.00*	*33.00*	*48*	*81*	*1.50*	
22309LBC3	22309LBKC3	1.7717	3.9370	1.4173	2.20	3.60	0.059	3.10
		45.00	*100.00*	*36.00*	*56*	*91*	*1.50*	
22310LBC3	22310LBKC3	1.9685	4.3307	1.5748	2.40	3.90	0.079	4.00
		50.00	*110.00*	*40.00*	*61*	*99*	*2.00*	
22311LBC3	22311LBKC3	2.1654	4.7244	1.6929	2.60	4.30	0.079	5.20
		55.00	*120.00*	*43.00*	*66*	*109*	*2.00*	
22312LBC3	22312LBKC3	2.3622	5.1181	1.8110	2.90	4.60	0.079	6.60
		60.00	*130.00*	*46.00*	*74*	*117*	*2.00*	
22313LBC3	22313LBKC3	2.5591	5.5118	1.8898	3.10	5.00	0.079	7.90
		65.00	*140.00*	*48.00*	*79*	*127*	*2.00*	
22314LBC3	22314LBKC3	2.7559	5.9055	2.0079	3.30	5.40	0.079	9.80
		70.00	*150.00*	*51.00*	*84*	*137*	*2.00*	
22315LBC3	22315LBKC3	2.9528	6.2992	2.1654	3.50	5.80	0.079	11.90
		75.00	*160.00*	*55.00*	*89*	*147*	*2.00*	
22316LBC3	22316LBKC3	3.1496	6.6929	2.2835	3.70	6.20	0.079	14.10
		80.00	*170.00*	*58.00*	*94*	*157*	*2.00*	
22317LBC3	22317LBKC3	3.3465	7.0866	2.3622	3.90	6.50	0.098	16.30
		85.00	*180.00*	*60.00*	*99*	*165*	*2.50*	
22318LBC3	22318LBKC3	3.5433	7.4803	2.5197	4.10	6.90	0.098	19.50
		90.00	*190.00*	*64.00*	*104*	*175*	*2.50*	
22319LBC3	22319LBKC3	3.7402	7.8740	2.6378	4.30	7.30	0.098	22.60
		95.00	*200.00*	*67.00*	*114*	*185*	*2.50*	
22320LBC3	22320LBKC3	3.9370	8.4646	2.8740	4.50	7.90	0.098	28.90
		100.00	*215.00*	*73.00*	*124*	*201*	*2.50*	
22322LBC3	22322LBKC3	4.3307	9.4488	3.1496	4.90	8.90	0.098	40.00
		110.00	*240.00*	*80.00*	*135*	*226*	*2.50*	
22324LBC3	22324LBKC3	4.7244	10.2362	3.3858	5.30	9.70	0.098	49.00
		120.00	*260.00*	*86.00*	*150*	*246*	*2.50*	
22326LBC3	22326LBKC3	5.1181	11.0236	3.6614	5.90	10.30	0.118	62.50
		130.00	*280.00*	*93.00*	*150*	*262*	*3.00*	
22328LBC3	22328LBKC3	5.5118	11.8110	4.0157	6.30	11.10	0.118	78.20
		140.00	*300.00*	*102.00*	*160*	*282*	*3.00*	

Continued...

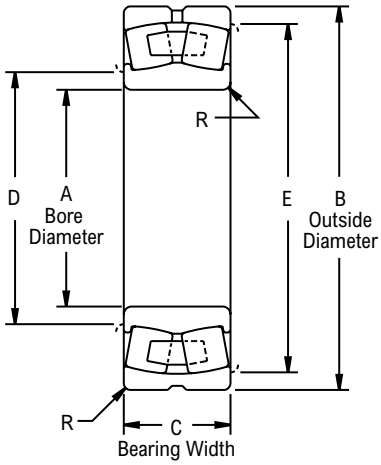

Cylindrical Bore

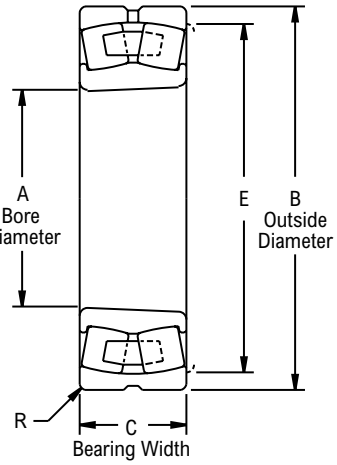

Tapered Bore

Continued...

Bearing Dimensions

Cylindrical Part Number	Tapered Part Number	A Bore Diameter	B Outside Diameter	C Bearing Width	D	E	R	Approx. Weight
22330LBC3	22330LBKC3	5.9055	12.5984	4.2520	6.60	11.90	0.118	92.00
		150.00	*320.00*	*108.00*	*168*	*302*	*3.00*	
22332LBC3	22332LBKC3	6.2992	13.3858	4.4882	7.10	12.70	0.118	110.00
		160.00	*340.00*	*114.00*	*180*	*323*	*3.00*	
22334LBC3	22334LBKC3	6.6929	14.1732	4.7244	7.40	13.50	0.118	129.00
		170.00	*360.00*	*120.00*	*188*	*343*	*3.00*	
22336LBC3	22336LBKC3	7.0866	14.9606	4.9606	7.80	14.30	0.118	153.00
		180.00	*380.00*	*126.00*	*198*	*363*	*3.00*	
22338LBC3	22338LBKC3	7.4803	15.7480	5.1968	8.40	14.90	0.157	176.00
		190.00	*400.00*	*132.00*	*213*	*378*	*4.00*	
22340LBC3	22340LBKC3	7.8740	16.5354	5.4331	8.80	15.70	0.157	200.00
		200.00	*420.00*	*138.00*	*224*	*399*	*4.00*	
22344LBC3	22344LBKC3	8.6614	18.1102	5.7087	9.60	17.30	0.157	287.00
		220.00	*460.00*	*145.00*	*244*	*439*	*4.00*	
22348LBC3	22348LBKC3	9.4488	19.6850	6.1024	10.70	18.40	0.197	321.90
		240.00	*500.00*	*155.00*	*272*	*467*	*5.00*	
22356LBC3	22356LBKC3	11.0236	22.8346	6.8898	12.60	21.30	0.236	482.80
		280.00	*580.00*	*175.00*	*320*	*541*	*6.00*	

Additional Notes

Please call 1-866-REXNORD for availability

Tapered bore, 1:12 on diameter

Dimension "R" is the largest fillet radius that will clear bearing corners

For the Selection Guide Load Ratings and Speed Limits, see the Link-Belt Spherical Roller Bearings Engineering section on pages 258 - 273.

For shaft bearing seat diameters, see Link-Belt Spherical Roller Bearings Shaft & Housing Seat Diameters section on pages 266 - 269.

Note: Dimensions subject to change. Certified dimensions of ordered material furnished on request.

23000LB, 23000LBK

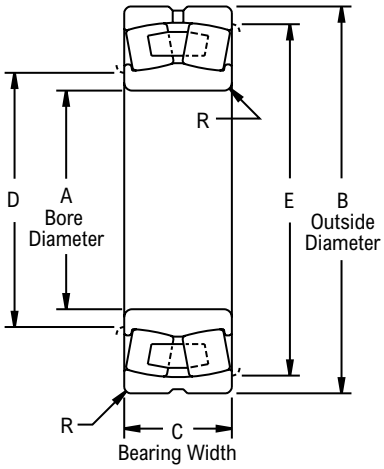

Cylindrical Bore

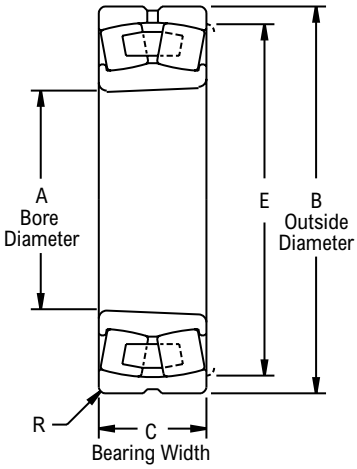

Tapered Bore

Product Features

Cylindrical or Tapered bore
Roller riding retainers
Self-aligning
Extra high capacity
See Features and Benefits for additional info on page 256.

Bearing Dimensions

Cylindrical Part Number	Tapered Part Number	A Bore Diameter	B Outside Diameter	C Bearing Width	D	E	R	Approx. Weight
23044LBC3	23044LBKC3	8.6614	13.3858	3.5433	9.60	12.60	0.118	64.80
		220.00	*340.00*	*90.00*	*244*	*320*	*3.00*	
23048LBC3	23048LBKC3	9.4488	14.1732	3.6220	10.00	13.60	0.098	74.60
		240.00	*360.00*	*92.00*	*254*	*345*	*2.50*	
23052LBC3	23052LBKC3	10.2362	15.7480	4.0945	11.40	14.70	0.157	101.90
		260.00	*400.00*	*104.00*	*290*	*373*	*4.00*	
23056LBC3	23056LBKC3	11.0236	16.5354	4.1732	11.80	15.80	0.118	117.60
		280.00	*420.00*	*106.00*	*300*	*401*	*3.00*	
23060LBC3	23060LBKC3	11.8110	18.1102	4.6457	13.00	17.00	0.118	163.30
		300.00	*460.00*	*118.00*	*330*	*432*	*3.00*	
23064LBC3	23064LBKC3	12.5984	18.8976	4.7638	13.90	16.40	0.157	165.10
		320.00	*480.00*	*121.00*	*353*	*417*	*4.00*	
23068LBC3	23068LBKC3	13.3858	20.4724	5.2362	14.80	19.20	0.197	220.50
		340.00	*520.00*	*133.00*	*376*	*488*	*5.00*	
23072LBC3	23072LBKC3	14.1732	21.2598	5.2756	15.70	20.00	0.197	231.50
		360.00	*540.00*	*134.00*	*399*	*508*	*5.00*	
23076LBC3	23076LBKC3	14.9606	22.0472	5.3150	16.50	20.80	0.197	246.90
		380.00	*560.00*	*135.00*	*419*	*528*	*5.00*	
23080LBC3	23080LBKC3	15.7480	23.6220	5.8268	17.30	22.30	0.197	319.70
		400.00	*600.00*	*148.00*	*439*	*566*	*5.00*	
23084LBC3	23084LBKC3	16.5354	24.4094	5.9055	18.10	23.10	0.197	330.70
		420.00	*620.00*	*150.00*	*460*	*587*	*5.00*	
23088LBC3	23088LBKC3	17.3228	25.5906	6.1811	19.20	24.00	0.236	378.40
		440.00	*650.00*	*157.00*	*488*	*610*	*6.00*	
23092LBC3	23092LBKC3	18.1102	26.7717	6.4173	20.00	25.10	0.236	438.70
		460.00	*680.00*	*163.00*	*508*	*638*	*6.00*	
23096LBC3	23096LBKC3	18.8976	27.5591	6.4961	20.80	25.90	0.236	463.00
		480.00	*700.00*	*165.00*	*528*	*658*	*6.00*	
230530LBC3	230530LBKC3	20.8661	30.7087	7.2835	22.90	29.00	0.236	651.20
		530.00	*780.00*	*185.00*	*582*	*737*	*6.00*	
230560LBC3	230560LBKC3	22.0472	32.2835	7.6772	24.10	30.60	0.236	756.80
		560.00	*820.00*	*195.00*	*612*	*777*	*6.00*	
230600LBC3	230600LBKC3	23.6220	34.2520	7.8740	25.80	32.50	0.236	855.80
		600.00	*870.00*	*200.00*	*655*	*826*	*6.00*	
230630LBC3	230630LBKC3	24.8031	36.2205	8.3465	27.30	34.10	0.315	1,029.60
		630.00	*920.00*	*212.00*	*693*	*866*	*8.00*	

Additional Notes

Please call 1-866-REXNORD for availability
Tapered bore, 1:12 on diameter
Dimension "R" is the largest fillet radius that will clear bearing corners
For the Selection Guide Load Ratings and Speed Limits, see the Link-Belt Spherical Roller Bearings Engineering section on pages 258 - 273.
For shaft bearing seat diameters, see Link-Belt Spherical Roller Bearings Shaft & Housing Seat Diameters section on pages 266 - 269.
Note: Dimensions subject to change. Certified dimensions of ordered material furnished on request.

23100LB, 23100LBK

Photo Shows an Unmounted Spherical Roller Bearing Unit

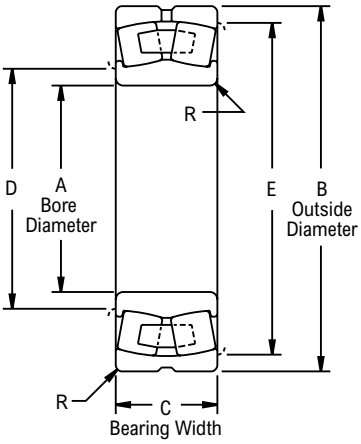

Cylindrical Bore

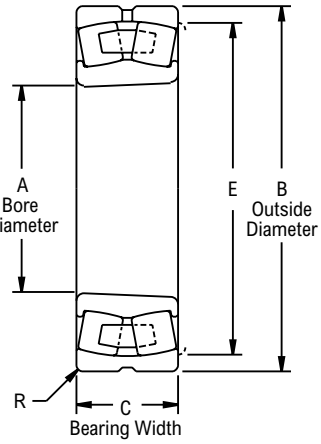

Tapered Bore

Product Features

Cylindrical or Tapered bore
Roller riding retainers
Self-aligning
High Capacity
See Features and Benefits for additional info on page 256.

Bearing Dimensions

Cylindrical Part Number	Tapered Part Number	A Bore Diameter	B Outside Diameter	C Bearing Width	D	E	R	Approx. Weight
23144LBC3	23144LBKC3	8.6614	14.5669	4.7244	9.80	13.50	0.157	116.00
		220.00	*370.00*	*120.00*	*249*	*343*	*4.00*	
23148LBC3	23148LBKC3	9.4488	15.7480	5.0394	10.60	14.70	0.157	142.00
		240.00	*400.00*	*128.00*	*269*	*373*	*4.00*	
23152LBC3	23152LBKC3	10.2362	17.3228	5.6693	11.40	16.30	0.157	193.10
		260.00	*440.00*	*144.00*	*290*	*414*	*4.00*	
23156LBC3	23156LBKC3	11.0236	18.1102	5.7480	12.40	16.90	0.197	206.30
		280.00	*460.00*	*146.00*	*315*	*429*	*5.00*	
23160LBC3	23160LBKC3	11.8110	19.6850	6.2992	13.20	18.40	0.197	273.40
		300.00	*500.00*	*160.00*	*335*	*467*	*5.00*	
23164LBC3	23164LBKC3	12.5984	21.2598	6.9291	14.00	20.00	0.197	354.90
		320.00	*540.00*	*176.00*	*356*	*508*	*5.00*	
23168LBC3	23168LBKC3	13.3858	22.8346	7.4803	14.80	21.50	0.197	451.90
		340.00	*580.00*	*190.00*	*376*	*546*	*5.00*	
23172LBC3	23172LBKC3	14.1732	23.6220	7.5591	15.70	20.00	0.197	474.00
		360.00	*600.00*	*192.00*	*399*	*508*	*5.00*	
23176LBC3	23176LBKC3	14.9606	24.4094	7.6378	16.50	23.10	0.197	500.40
		380.00	*620.00*	*194.00*	*419*	*587*	*5.00*	
23180LBC3	23180LBKC3	15.7480	25.5905	7.8740	17.60	24.00	0.236	564.40
		400.00	*650.00*	*200.00*	*447*	*610*	*6.00*	
23184LBC3	23184LBKC3	16.5354	27.5591	8.8189	18.30	25.90	0.236	745.10
		420.00	*700.00*	*224.00*	*465*	*658*	*6.00*	
23188LBC3	23188LBKC3	17.3228	28.3465	8.8976	19.20	26.70	0.236	789.20
		440.00	*720.00*	*226.00*	*488*	*678*	*6.00*	
23192LBC3	23192LBKC3	18.1102	29.9213	9.4488	20.30	27.90	0.315	925.90
		460.00	*760.00*	*240.00*	*516*	*709*	*8.00*	
23196LBC3	23196LBKC3	18.8976	31.1024	9.7638	21.10	29.10	0.315	1,040.60
		480.00	*790.00*	*248.00*	*536*	*739*	*8.00*	
231530LBC3	231530LBKC3	20.8661	34.2520	10.7087	23.20	32.20	0.315	1,381.60
		530.00	*870.00*	*272.00*	*589*	*818*	*8.00*	
231560LBC3	231560LBKC3	22.0472	36.2205	11.0236	24.40	34.10	0.315	1,599.40
		560.00	*920.00*	*280.00*	*620*	*866*	*8.00*	
231600LBC3	231600LBKC3	23.6220	38.5827	11.8110	26.10	36.40	0.315	1,975.60
		600.00	*980.00*	*300.00*	*663*	*925*	*8.00*	
231630LBC3	231630LBKC3	24.8031	40.5512	12.4016	27.30	38.30	0.315	2,288.00
		630.00	*1,030.00*	*315.00*	*693*	*973*	*8.00*	

Additional Notes

Please call 1-866-REXNORD for availability
Tapered bore, 1:12 on diameter
Dimension "R" is the largest fillet radius that will clear bearing corners
For the Selection Guide Load Ratings and Speed Limits, see the Link-Belt Spherical Roller Bearings Engineering section on pages 258 - 273.
For shaft bearing seat diameters, see Link-Belt Spherical Roller Bearings Shaft & Housing Seat Diameters section on pages 266 - 269.
Note: Dimensions subject to change. Certified dimensions of ordered material furnished on request.

23200LB, 23200LBK

Photo Shows an Unmounted Spherical Roller Bearing Unit

Product Features

Cylindrical or Tapered bore
Roller riding retainers
Self-aligning
High Capacity
See Features and Benefits for additional info on page 256.

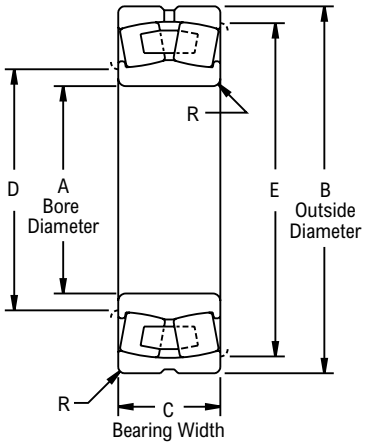

Cylindrical Bore

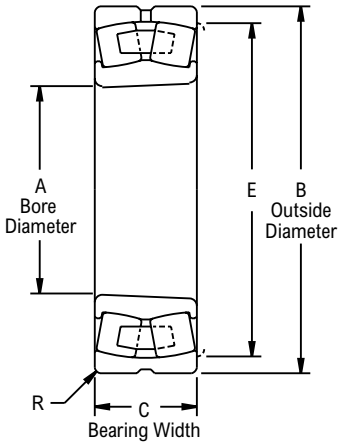

Tapered Bore

Bearing Dimensions

Cylindrical Part Number	Tapered Part Number	A Bore Diameter	B Outside Diameter	C Bearing Width	D	E	R	Approx. Weight
23244LBC3	23244LBKC3	8.6614	15.7480	5.6693	9.80	14.70	0.157	175.70
		220.00	*400.00*	*144.00*	*249*	*373*	*4.00*	
23248LBC3	23248LBKC3	9.4488	17.3228	6.2992	10.60	16.30	0.157	231.50
		240.00	*440.00*	*160.00*	*269*	*414*	*4.00*	
23252LBC3	23252LBKC3	10.2362	18.8976	6.8504	11.60	17.60	0.197	297.60
		260.00	*480.00*	*174.00*	*295*	*447*	*5.00*	
23256LBC3	23256LBKC3	11.0236	19.6850	6.9291	12.40	18.40	0.197	319.70
		280.00	*500.00*	*176.00*	*315*	*467*	*5.00*	
23260LBC3	23260LBKC3	11.8110	21.2598	7.5591	13.20	20.00	0.197	414.50
		300.00	*540.00*	*192.00*	*335*	*508*	*5.00*	
23264LBC3	23264LBKC3	12.5984	22.8346	8.1890	14.00	21.50	0.197	522.50
		320.00	*580.00*	*208.00*	*356*	*546*	*5.00*	
23268LBC3	23268LBKC3	13.3858	24.4094	8.8189	15.10	22.80	0.236	643.70
		340.00	*620.00*	*224.00*	*384*	*579*	*6.00*	
23272LBC3	23272LBKC3	14.1732	25.5905	9.1339	15.90	24.00	0.236	727.50
		360.00	*650.00*	*232.00*	*404*	*610*	*6.00*	
23276LBC3	23276LBKC3	14.9606	26.7717	9.4488	16.70	25.10	0.236	813.50
		380.00	*680.00*	*240.00*	*424*	*638*	*6.00*	
23280LBC3	23280LBKC3	15.7480	28.3465	10.0787	17.60	26.70	0.236	983.20
		400.00	*720.00*	*256.00*	*447*	*678*	*6.00*	
23284LBC3	23284LBKC3	16.5354	29.9213	10.7087	18.70	27.90	0.315	1,170.60
		420.00	*760.00*	*272.00*	*475*	*709*	*8.00*	
23288LBC3	23288LBKC3	17.3228	31.1024	11.0236	19.50	29.10	0.315	1,298.50
		440.00	*790.00*	*280.00*	*495*	*739*	*8.00*	
23292LBC3	23292LBKC3	18.1102	32.6772	11.6535	20.30	30.60	0.315	1,511.40
		460.00	*830.00*	*296.00*	*516*	*777*	*8.00*	
23296LBC3	23296LBKC3	18.8976	34.2520	12.2047	21.10	32.20	0.315	1,742.40
		480.00	*870.00*	*310.00*	*536*	*818*	*8.00*	

Additional Notes

Please call 1-866-REXNORD for availability
Tapered bore, 1:12 on diameter
Dimension "R" is the largest fillet radius that will clear bearing corners
For the Selection Guide Load Ratings and Speed Limits, see the Link-Belt Spherical Roller Bearings Engineering section on pages 258 - 273.
For shaft bearing seat diameters, see Link-Belt Spherical Roller Bearings Shaft & Housing Seat Diameters section on pages 266 - 269.
Note: Dimensions subject to change. Certified dimensions of ordered material furnished on request.

23900LB, 23900LBK

Photo Shows an Unmounted Spherical Roller Bearing Unit

Product Features

Cylindrical or Tapered bore
Roller riding retainers
Self-aligning
High Capacity
See Features and Benefits for additional info on page 256.

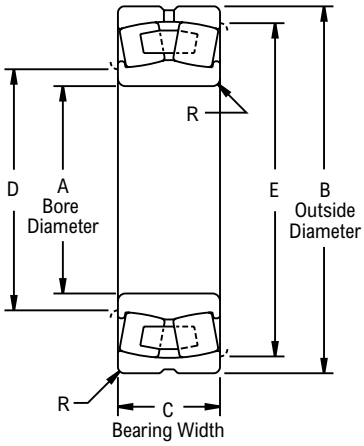

Cylindrical Bore

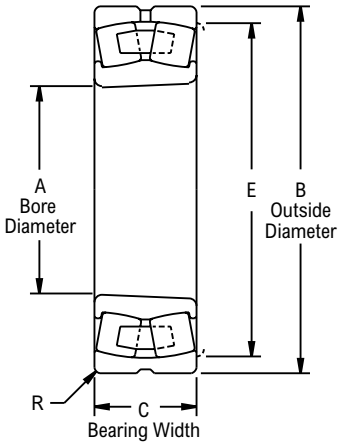

Tapered Bore

Bearing Dimensions

Cylindrical Part Number	Tapered Part Number	A Bore Diameter	B Outside Diameter	C Bearing Width	D	E	R	Approx. Weight
23944LBC3	23944LBKC3	8.6614	11.8110	2.3622	9.50	11.10	0.079	26.70
		220.00	*300.00*	*60.00*	*241*	*282*	*2.00*	
23948LBC3	23948LBKC3	9.4488	12.5984	2.3622	10.40	11.90	0.079	28.90
		240.00	*320.00*	*60.00*	*264*	*302*	*2.00*	

Additional Notes

Please call 1-866-REXNORD for availability
Tapered bore, 1:12 on diameter
Dimension “R” is the largest fillet radius that will clear bearing corners
For the Selection Guide Load Ratings and Speed Limits, see the Link-Belt Spherical Roller Bearings Engineering section on pages 258 - 273.
For shaft bearing seat diameters, see Link-Belt Spherical Roller Bearings Shaft & Housing Seat Diameters section on pages 266 - 269.
Note: Dimensions subject to change. Certified dimensions of ordered material furnished on request.

A20000S

Photo Shows an Unmounted Spherical Roller Bearing Unit

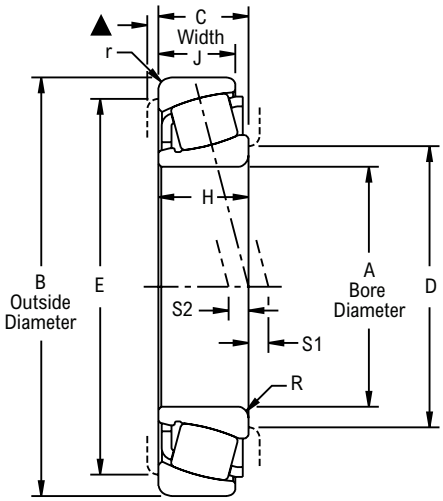

Product Features

- Single row
- Adjustable
- Self aligning
- Deep coined retainer
- Double contoured roller pocket
- See Features and Benefits for additional info on page 256.

Bearing Dimensions

Part Number	A Bore Diameter	B Outside Diameter	C Bearing Width	D	E	H	J	R	r	S1 & S2	Approx. Weight
A22100S	1.0000	2.3750	0.7810	1.37	2.00	0.7930	0.4910	0.046	0.046	0.187	1.00
A22150S	1.5000	2.8345	0.6700	1.81	2.50	0.6500	0.5460	0.062	0.062	0.015	1.10
A22196S	1.9680	3.5433	0.7870	2.38	3.18	0.7870	0.6510	0.078	0.078	0.024	1.20
A23225S	2.2500	3.9370	0.8280	2.65	3.50	0.8600	0.6930	0.093	0.062	0.000	4.00
A22262S	2.6250	4.4677	0.9480	3.06	4.07	1.0000	0.6900	0.140	0.062	0.090	2.00
A22300S	3.0000	5.1172	1.0620	3.40	4.57	1.0620	0.9280	0.078	0.078	0.000	2.40
A23300S	3.0000	5.9045	1.1090	4.00	5.34	1.2360	0.9250	0.140	0.125	0.048	5.00
A23334S	3.3457	5.9045	1.1090	4.00	5.34	1.1090	0.9250	0.125	0.125	0.048	5.10

Additional Notes

Please call 1-866-REXNORD for availability

▲ Housing recess: recommended 3/16 in, minimum 1/16 in

Dimension "R" & "r" are the largest fillet radius that will clear bearing corners

Bearing O.D. tolerance, +.001 in/-.000 in *(+0.025 mm/-0.000 mm)*

Bore tolerance for shaft sizes 3.0000 in and smaller, +.0005 in/-.0000 in *(+0.013 mm/-0.000 mm)*: for all other shaft sizes, +.0010 in/-.0000 in *(+0.025 mm/-0.000 mm)*

"S1" dimension applies to bore diameters 3.000 in to 4.1331 in, "S2" dimension for all others

For the Selection Guide Load Ratings and Speed Limits, see the Link-Belt Spherical Roller Bearings Engineering section on pages 258 - 273.

For shaft bearing seat diameters, see Link-Belt Spherical Roller Bearings Shaft & Housing Seat Diameters section on pages 266 - 269.

Note: Dimensions subject to change. Certified dimensions of ordered material furnished on request.

A20000

Photo Shows an Unmounted Spherical Roller Bearing Unit

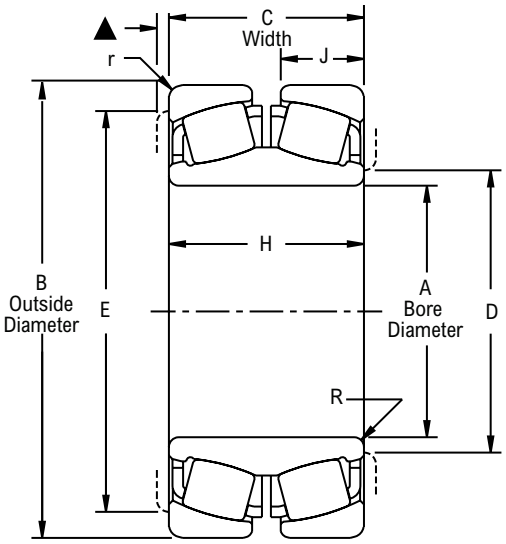

Product Features

Double row
Adjustable
Self aligning
Deep coined retainers
Double contoured roller pocket
See Features and Benefits for additional info on page 256.

Bearing Dimensions

Part Number	A Bore Diameter	B Outside Diameter	C Bearing Width	D	E	H	J	R	r	Approx. Weight
A22100	1.0000	2.3750	1.1880	1.31	2.00	1.1880	0.4910	0.046	0.046	1.20
A22112	1.1250	2.3750	1.1880	1.31	2.00	1.1880	0.4910	0.046	0.046	1.20
A22118	1.1875	2.6250	1.3120	1.50	2.31	1.3120	0.5410	0.046	0.062	1.20
A22125	1.2500	2.6250	1.3120	1.50	2.31	1.3120	0.5410	0.046	0.062	1.20
A22137	1.3775	2.8345	1.3100	1.68	2.50	1.3100	0.5460	0.046	0.062	1.60
A22150	1.5000	2.8345	1.3100	1.68	2.50	1.3100	0.5460	0.046	0.062	1.60
A22177	1.7712	3.3464	1.5780	2.00	2.87	1.5780	0.6510	0.080	0.062	1.60
A22196	1.9680	3.5433	1.5260	2.25	3.18	1.5260	0.6510	0.062	0.078	2.30
A23196	1.9680	3.9370	1.6560	2.25	3.50	1.6560	0.6240	0.093	0.062	2.30
A24196	1.9680	4.3299	2.0620	2.18	3.83	2.0620	0.8360	0.062	0.080	4.00
A23200	2.0000	3.9370	1.6560	2.50	3.50	1.6560	0.6930	0.093	0.062	4.00
A23225	2.2500	3.9370	1.6560	2.50	3.50	1.6560	0.6930	0.093	0.062	4.00
A24236	2.3616	4.3307	1.7500	2.68	3.87	1.7500	0.7630	0.062	0.078	4.00
A22262	2.6250	4.4677	1.7160	3.00	4.07	1.7160	0.6900	0.140	0.062	6.60
A23262	2.6250	5.0000	2.1880	2.90	4.44	2.1880	0.9360	0.078	0.078	6.60
A22275	2.7500	5.1172	2.1250	3.31	4.57	2.1500	0.9280	0.080	0.078	6.90
A22295	2.9522	5.1172	2.1250	3.31	4.57	2.1500	0.9280	0.140	0.078	6.90
A23334	3.3457	5.9045	2.3130	3.75	5.34	2.3130	0.9250	0.078	0.125	6.90
A22343	3.4375	6.0000	2.7500	4.00	5.43	2.7500	1.1730	0.078	0.125	11.30
A22351	3.5100	6.0000	2.7500	4.00	5.43	2.7500	1.1730	0.078	0.125	11.30
A22362	3.6250	6.0000	2.7500	4.00	5.43	2.7500	1.1730	0.078	0.125	11.30
A24374	3.7402	7.0866	2.6770	4.19	6.38	2.6770	1.1520	0.093	0.125	11.30

Additional Notes

Please call 1-866-REXNORD for availability
▲ Housing recess: recommended 3/16 in, minimum 1/16 in
Dimension "R" & "r"are the largest fillet radius that will clear bearing corners
Bearing O.D. tolerance, +.001 in/-.000 in *(+0.025 mm/-0.000 mm)*
Bore tolerance for shaft sizes 2.5000 in and smaller, +.0005 in/-.0000 in *(+0.013 mm/-0.000 mm)*: for all other shaft sizes, +.0010 in/-.0000 in *(+0.025 mm/-0.000 mm)*
Bearing width tolerance, +/-.025 in *(+/-0.64 mm)*
Housing must allow clearance for this adjustment on dimension "C"

For the Selection Guide Load Ratings and Speed Limits, see the Link-Belt Spherical Roller Bearings Engineering section on pages 258 - 273.
For shaft bearing seat diameters, see Link-Belt Spherical Roller Bearings Shaft & Housing Seat Diameters section on pages 266 - 269.
Note: Dimensions subject to change. Certified dimensions of ordered material furnished on request.

A20000M

Photo Shows an Unmounted Spherical Roller Bearing Unit

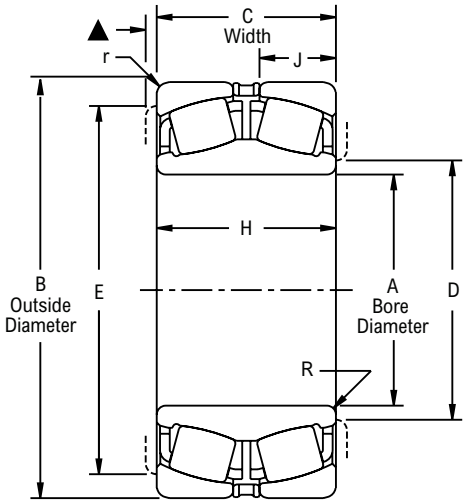

Product Features

Double row
Factory adjusted
Self aligning
Deep coined retainers
Double contoured roller pocket
See Features and Benefits for additional info on page 256.

Bearing Dimensions

Part Number	A Bore Diameter	B Outside Diameter	C Bearing Width	D	E	H	J	R	r	Approx. Weight
A22100M	1.0000	2.3750	1.1880	1.31	2.00	1.1880	0.4910	0.046	0.046	1.00
A22112M	1.1250	2.3750	1.1880	1.31	2.00	1.1880	0.4910	0.046	0.046	1.00
A22118M	1.1875	2.6250	1.3120	1.50	2.31	1.3120	0.5410	0.046	0.062	1.00
A22125M	1.2500	2.6250	1.3120	1.50	2.31	1.3120	0.5410	0.046	0.062	1.00
A22137M	1.3775	2.8345	1.3100	1.68	2.50	1.3100	0.5460	0.046	0.062	1.70
A22150M	1.5000	2.8345	1.3100	1.68	2.50	1.3100	0.5460	0.046	0.062	1.70
A22177M	1.7712	3.3464	1.5780	2.00	2.87	1.5780	0.6510	0.080	0.062	1.70
A22196M	1.9680	3.5433	1.5260	2.25	3.18	1.5260	0.6510	0.062	0.078	2.40
A23196M	1.9680	3.9370	1.6560	2.25	3.50	1.6560	0.6240	0.093	0.062	2.40
A23200M	2.0000	3.9370	1.6560	2.50	3.50	1.6560	0.6930	0.093	0.062	4.00
A23225M	2.2500	3.9370	1.6560	2.50	3.50	1.6560	0.6930	0.093	0.062	4.00
A24196M	1.9680	4.3299	2.0620	2.18	3.83	2.0620	0.8360	0.062	0.080	4.00
A24236M	2.3616	4.3307	1.7500	2.68	3.87	1.7500	0.7630	0.062	0.078	4.00
A23262M	2.6250	5.0000	2.1880	2.90	4.44	2.1880	0.9360	0.078	0.078	6.70
A22275M	2.7500	5.1172	2.1250	3.31	4.57	2.1500	0.9280	0.080	0.078	9.50
A22295M	2.9522	5.1172	2.1250	3.31	4.57	2.1500	0.9280	0.140	0.078	9.50
A23334M	3.3457	5.9045	2.3130	3.75	5.34	2.3130	0.9250	0.078	0.125	9.50
A22343M	3.4375	6.0000	2.7500	4.00	5.43	2.7500	1.1730	0.078	0.125	15.00
A22351M	3.5100	6.0000	2.7500	4.00	5.43	2.7500	1.1730	0.078	0.125	15.00
A22362M	3.6250	6.0000	2.7500	4.00	5.43	2.7500	1.1730	0.078	0.125	15.00

Additional Notes

Please call 1-866-REXNORD for availability
Complete part number includes clearance symbol, i.e. A22100MC0
▲ Housing recess: recommended 3/16 in, minimum 1/16 in
Dimension "R" & "r" are the largest fillet radius that will clear bearing corners
Bearing O.D. tolerance, +.001 in/-.000 in *(+0.025 mm/-0.000 mm)*
Bore tolerance for shaft sizes 2.5000 in and smaller, +.0005 in/-.0000 in *(+0.013 mm/-0.000 mm)*: for all other shaft sizes, +.0010 in/-.0000 in *(+0.025 mm/-0.000 mm)*
Bearing width tolerance, +/-.025 in *(+/-0.64 mm)*

Housing must allow clearance for this adjustment on dimension "C"
For the Selection Guide Load Ratings and Speed Limits, see the Link-Belt Spherical Roller Bearings Engineering section on pages 258 - 273.
For shaft bearing seat diameters, see Link-Belt Spherical Roller Bearings Shaft & Housing Seat Diameters section on pages 266 - 269.
Note: Dimensions subject to change. Certified dimensions of ordered material furnished on request.

Ball Bearings
Standard Duty (200 Series) Units: Link-Belt

Contents

	Page
Features and Benefits	286
Nomenclature	288
Engineering	290
Dimensions	
Pillow Blocks	299
Flange Blocks	321
Take-up Blocks	359
Hanger Units	366
Take-up Assemblies	369
Take-up Frames	373
Hanger and Trough Units	377
Unmounted Replacement Bearings	379

Industries Served

Aggregates
Agriculture
Air Handling
Package Handling
Construction
Shipping

200 Series Standard & Intermediate Duty Ball Bearings

200 Series standard and intermediate duty ball bearing units provide a versatility of application arrangements for carrying shafts with radial or combination radial and thrust loads. They are designed for general purpose industrial machinery, conveyors, chain and belt drives, fans and blowers, power transmission and many other applications.

Collar Mounted Ball Bearings

Series CL200, U200, S200, W200, Y200 collar mounted or spring locking ball bearings, and round, square and hex bore ball bearings provide economic and versatile arrangements for supporting shafts, especially with the 2-piece formed steel flanged housings.

These product lines are designed for light industrial applications, agricultural machinery, lawn and garden equipment, recreational vehicles and other applications.

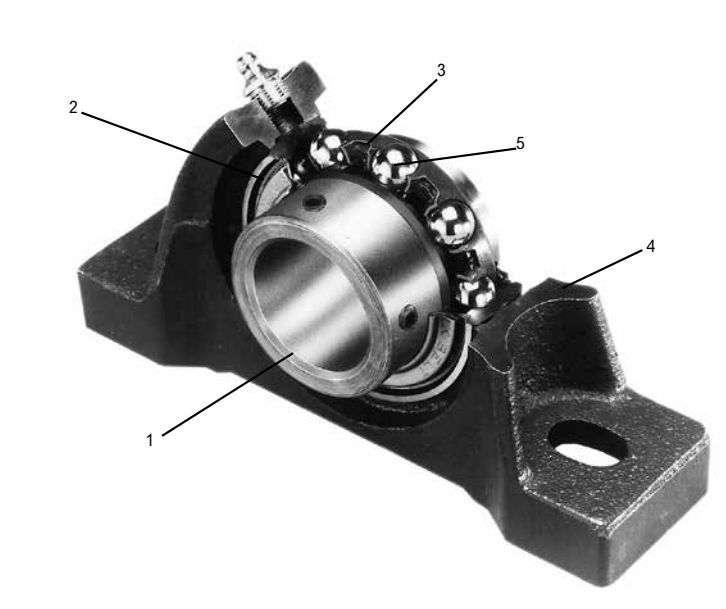

1. Inner Ring

Extended or wide inner ring for moderate or high stability and load support.

2. Choice of Locking Device

Choice of Centrik-Lok locking device, eccentric cam locking collar or spring locking or spring locking collar with set screws to lock inner ring securely to shaft.

3. Choice of Seal Type

Choice of steel-clad type H labyrinth seal, type N single lip seal or type E3 triple lip seal. W200 & S200 series have the type E single lip seal only available.

4. One-piece Housing

Compact one-piece housing provides excellent mounting support.

5. Precision Ball Bearing

Alignable precision deep groove ball bearing manufactured of quality alloy bearing steel provides high capacity and long life.

1. Precision Ball Bearing

Precision deep groove ball bearings or quality alloy bearing steel provide high capacity and long life.

2. Choice of Locking Device

Choice of Centrik-Lok locking device, eccentric cam locking collar or spring locking or spring locking collar with set screws to lock inner ring securely to shaft.

3. Optional Features

Optional features such as spherical or cylindrical O.D.'s, relubricatable or non-relubricatable.

4. Inner Ring Options

Extended or wide inner rings to meet diverse application requirements.

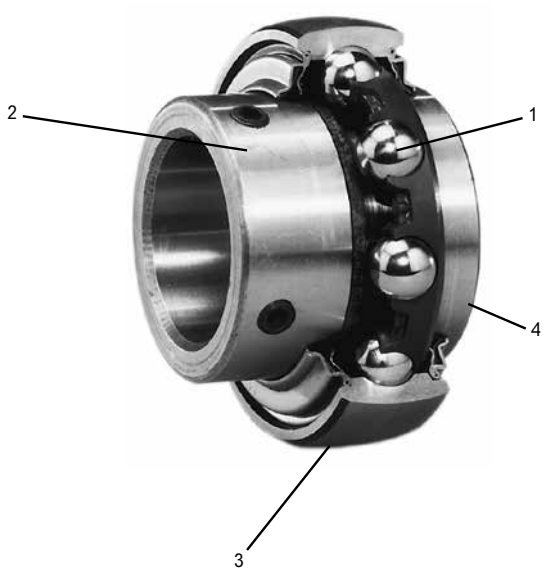

Wide and Extended Inner Ring Ball Bearings

Centrik-Lok CL

Precision alignable ball bearings of deep groove construction for high capacity and high precision applications. Centrik-Lok device securely locks the bearing to the shaft. This method of locking provides excellent holding power and also centers the shaft in the bearing. It eliminates shaft damage because setscrews don't contact the shaft making bearing removal easier. The C200 wide inner ring furnishes increased shaft support and accommodates wider seals for extra lubricant capacity.

Spring Locking

Precision alignable ball bearings of deep groove construction for high capacity and high precision applications. Spring locking collar or setscrew locking securely locks the bearing to the shaft. The U200 wide inner ring furnishes increased shaft support and accommodates wider seals for extra lubricant capacity.

Eccentric Cam Locking Collars

Precision alignable ball bearings of deep groove construction. Eccentric cam locking collars hold the bearings securely to the shaft and further tightens with bearing rotation. The Y200 wide inner ring provides increased shaft support and accommodates wide seals for extra lubricant capacity.

One-piece Housings

Rugged one-piece precision machined housings of many types provide a versatility of mounting arrangement and facilitate installation. All mounting surfaces are fully machined and all housings provide for easy bearing relubrication. Grease flows through the fitting into a machined grease groove and through the lubricant holes of the outer ring directly into the bearing chamber between the seals. Pillow blocks have slotted bolt holes with ample space provided for drilling dowel pin holes. Flanged units have drilled mounting holes. Take-up units have machined slots for accurate adjustment.

Steel Clad Seals

All bearing type seals are crimped tightly in the bearing outer rings with steel members and cannot be blown out during relubrication.

Type H Multi-labyrinth Seal

This seal has contoured external trash guard is an excellent all purpose low friction seal for grease lubrication.

Type N Lip Seals

These seals have the same contoured external trash guard for maximum lip protection and a full land riding lip for grease retention and dirt exclusion. These seals ride on a precision ground surface of the bearing inner ring for smooth operation and tightness.

Type E Molded Lip Seal

The type E seal has external trash guard for maximum lip protection and a full land riding lip for grease retention and dirt exclusion.

Type E3 Triple Lip Seal

This seal is a tight high torque seal for ultimate dirt exclusion. It has an external trash guard to protect the precision die molded lip members.

Type FF Flingers

This seal is for "free running" applications and/or temperatures over 400°F where contamination is not severe.

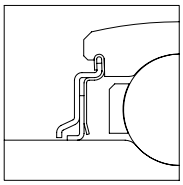

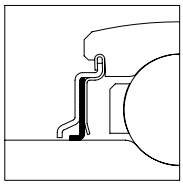

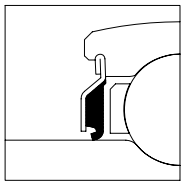

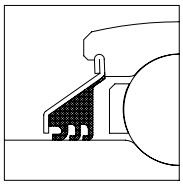

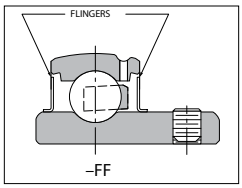

200 Series Nomenclature

PL 3 U 2 E 20 H C K75

Symbol	Description
F	Flanged unit, 3 and 4-bolt
FB	Flanged bracket unit, 3-bolt
FF	Flanged screw conveyor unit, 4-bolt
FC	Flanged cartridge unit, 4-bolt round
FX	Flanged unit, 2-bolt
FR	Flanged unit, 3 and 4-bolt inboard mounting
FXR	Flanged unit, 2-bolt inboard mounting
HM	Hanger screw conveyor unit
P	Pillow block, standard backing
PH	Pillow block, high backing
PL	Pillow block, low backing
PS	Pillow block, formed steel housing
PT	Pillow block, tapped base
T	Take-up, standard slot
TH	Take-up, wide slot
TAS	Conveyor take-up, formed steel frame
TDS	Conveyor take-up, hinged top, welded steel frame
NT	Conveyor take-up, welded channel frame
3	Integral bearing seals
CL	Wide inner ring, Centrik-Lok collar
S	Narrow inner ring, spring locking
U	Wide inner ring, spring locking
Y	Wide inner ring, eccentric cam locking collar
W	Narrow inner ring, eccentric cam locking collar
None	Non-relubricatable bearing
G	Relubricatable bearing
2	200 Series ball bearing designation
B	Inner ring bore equal to a bore of preceding smaller bearing group
E	Inner ring bore equal to a bore of following larger bearing group
20	Shaft size in sixteenths of an inch
M30	Shaft size, metric series in millimeters
J	Steel retainers
E3	Triple lip seals
E	Molded single lip seals
FF	Flingers only, 50% grease fill
HFF	Flingers only, 10% oil fill
MHFF	Flingers only, 10% grease fill
H	Floating labyrinth seals
N	Single lip seals
C	Closed end unit
K75	Nickel plated housing
18	Take-up adjustment, inches
K4	100% Grease Filled
K5	No Grease - Preservative only
K6	100% Grease filled and housing plugged
K13	Housing Plugged
K75	Nickel Plated Housing
K82	Black oxide coated rings
18A	SHC100 Grease
18W	SHC460 Grease
18Y	SHC220 Grease
4C	molykote 44 Grease
99A	Food Grade Grease
2, 3, 4, 5	Clearances other than standard

200 Series Collar Unmounted Ball Bearings Nomenclature

U B G 2 E 20 H L

Symbol	Description
CL	Wide Inner Ring, Centrik-Lok Collar
ER	Adapter series, cylindrical O.D. with lube groove and O.D. locating ring
MSL	Ball bearing, cylindrical O.D., wide inner ring, spring locking
MSLN	Ball bearing, cylindrical O.D., narrow inner ring, spring locking
RER	Rubber cartridge unit (used in FPSR2 units)
S	Extended inner ring, spring locking
U	Wide inner ring, spring locking
Y	Wide inner ring, eccentric cam locking collar
W	Extended inner ring, eccentric cam locking collar
None	O.D. of outer ring is spherical
B	O.D. of outer ring is cylindrical
None	Non-relubricatable bearing
G	Relubricatable bearing
2	200 Series ball bearing designation
B	Inner ring bore equal to a bore of preceding smaller bearing group
E	Inner ring bore equal to a bore of following larger bearing group
20	Shaft size in sixteenths of an inch
M30	Shaft size, metric series in millimeters
E3	Triple lip seals
E	Molded single lip seals
H	Floating labyrinth seals
N	Single lip seals
L1	Bearing without collar
L	Bearing with collar & setscrews

Hex, Round and Square Bore Ball Bearings Nomenclature

31 R B G 3 - 2 10 J E3

Symbol	Description
None	Bore is basic metric size
31	Shaft size in sixteenths of an inch
R	Bearing bore is round
S	Bearing bore is square
K	Bearing bore is hex
None	O.D. of outer ring is spherical
B	O.D. of outer ring is cylindrical
None	Non-relubricatable
G	Relubricatable (two holes in outer ring @ 180°)
None	Metric width outer ring; basic inch width inner ring
2	Basic inch width outer ring; intermediate inch width inner ring
3	Basic inch width outer ring; basic inch width inner ring
4	Basic inch width outer ring; unground spherical O.D. with flat ground cylindrical center; intermediate inch width inner ring
5	Metric width outer ring; intermediate inch width inner ring
6	Basic inch width outer ring; wide inch width inner ring
7	Wide metric width outer ring; intermediate inch width inner ring
8	Wide metric width outer ring; wide inch width inner ring
2	Series 200 ball bearing designation
E	Bore is .031 inch oversize
10	One fifth of basic mm bore size
None	Non-metallic retainer
J	Formed steel retainer, two-piece
N	Single lip seals
E3	Triple lip seals

Seal Selection Guide

The choice of the seal for a mounted bearing is often the key to successful bearing operation and long service life. The Seal Selection Guide incorporates years of experience against the wide variety of conditions encountered on actual applications. Following the simple selection procedure outlined can translate the benefits of that broad experience to the individual applications through the choice of the most effective seal.

How to Use the Selection Guide

a. The appropriate seal for a given application may be selected by comparing the job application conditions against those listed in the Seal Rating Guide on this page.

b. When more than one application condition is present, the most appropriate seal may be selected based on prime sealing for the most detrimental condition, and secondary consideration given to the other application conditions.

c. If further evaluation of the seals must be made, then refer to the General Design and Characteristic Guide

d. Addition of auxiliary caps will enhance the primary seal performance shown in the chart.

Considerations in Addition to Seal Selection

Under certain adverse conditions, other changes should be considered to achieve maximum bearing life:

a. High temperature lubricants where housing or ambient temperatures exceed +200°F.

b. Special greases for additional bearing protection where excessive water, solvents or chemicals are present.

c. EP (extreme pressure) greases where high load, high shock load, or continuous vibration is present.

d. Readjustment of internal operating clearance of bearing where extreme high or low temperature conditions exist.

Seal Rating Guide

Application Conditions	Seal Ratings			
	Clearance H	Single Lip E	Single Lip N	Triple Lip E3
Shaft Position				
Horizontal Shaft	4	4	4	4
Veritcal Shaft	1	4	4	4
Operating Temperature				
Below -40°F	4	1	1	1
-40°F to 0°F	4	3	3	3
0°F to +250°F	4	4	4	4
+250°F to +400°F	4	0	0	0
Over 400°F	4	0	0	0
Speed				
Equal to / Less than limit below	4	4	4	4
More than limit below	4	1	1	1
Vibration/Shock				
Occasional - Mild	3	4	4	4
Occasional - Severe	2	4	4	4
Continuous - Mild	1	3	3	3
Continuous - Severe	0	3	3	3
Abrasive Material				
Coarse - Over #10 Mesh	4	4	4	4
Small - #10 to #50 Mesh	3	4	4	4
Fine - #50 to #200 Mesh	1	3	3	4
Very fine - Under #200 Mesh	0	3	3	4
"Caking or buildup" (cement, etc.)	2	3	3	4
Moisture				
Splash	2	4	4	4
Rain	2	4	4	4
Saturated Atmosphere	1	4	4	4
Flooding	0	3	3	4
Pressure Wash	0	3	3	4
Fibrous Material				
Short Fibers (lint, etc.)	1	3	3	4
Long Fibers (grass, etc.)	1	3	3	4
Chemical				
Acid Fumes and Liquids	1	1	1	1
Alkaline Fumes and Liquids	1	1	1	1

Rating Code

4 - Excellent - Best seal for conditions listed.
3 - Good - Sealability is above average.
2 - Fair - Seal performs under intermittent conditions.
1 - Limited - Actual conditions must be known to evaluate sealability. Check "General Characteristic Guide" for construction as well as benefits and limitations for further evaluation.
0 - Not acceptable - Will not effectively perform seal functions. Contact Rexnord for special assistance in the realm of materials and designs.

Seal Speed Limit Table*

Size Code		203	204	205	206	207	208	209	210	211	212	213	215	217	220
Bearing Series	CL		212	214 215 216	218 219 2E20	220 222 223	224	226 227 228	230 231 2E32	232 235 2E36	236 238 239	240 243	244 247 2E48	255 2E56	263 2E64
	Y	2B08 210 211	212	214 215 216	218 219 2E20	220 222 223	224	226 227 228	231 2E32	232 235	236 238 239				
	U	2B08 210 211	212	214 215 216	218 219 2E20	220 222 223	224	226 227 228	231 2E32	232 235	236 238 239	240 243	244 247 2E48	255 2E56	263 2E64
	W	2B08 210	212	214 215 216	218 219 2E20	220 222 223	224	226 227 228	231 2E32						
	S		212	214 215 216	218 219 2E20	220 222 223	224	226 227 228	231						
(RPM)	Flingers	15800	13400	11400	9800	8400	7500	6800	6400	5800	5300	N/A	4400	N/A	N/A
	H	12000	10000	9600	8000	6850	6000	5330	4800	4360	4000	N/A	N/A	N/A	N/A
	E	9000	7500	6800	5600	4800	4500	4000	3600	N/A	N/A	N/A	N/A	N/A	N/A
	N	12000	10000	9600	8000	6850	6000	5330	4800	4360	4000	3850	3300	2950	2500
	E3	N/A	N/A	1000	N/A	700	650	600	550	500	450	400	350	300	N/A
Size Code		203	204	205	206	207	208	209	210	211	212	213	215	217	220

Refer to Seal Rating Guide shown above for speeds in excess of those listed in this table.

* Actual bearing speed limits are largely based upon the applied load and can be found on the Load Rating Table.

Seal Availability by Size Code and Inner Race Style

	H	N	E	E3	MHFF	HFF	FF
203	CL U Y	CL U S Y W	CL U S Y W		CL U S Y W	CL U S Y W	CL U S Y W
204	CL U Y	CL U S Y W	CL U S Y W		CL U S Y W	CL U S Y W	CL U S Y W
205	CL U Y	CL U S Y W	CL U S Y W	CL U Y	CL U S Y W	CL U S Y W	CL U S Y W
206	CL U Y	CL U S Y W	CL U S Y W	CL U Y	CL U S Y W	CL U S Y W	CL U S Y W
207	CL U Y	CL U S Y W	CL U S Y W	CL U Y	CL U S Y W	CL U S Y W	CL U S Y W
208	CL U Y	CL U S Y W	CL U S Y W	CL U Y	CL U S Y W	CL U S Y W	CL U S Y W
209	CL U Y	CL U S Y W	CL U S Y W	CL U Y	CL U S Y W	CL U S Y W	CL U S Y W
210	CL U Y	CL U S Y W	CL U S Y W	CL U Y	CL U S Y W	CL U S Y W	CL U S Y W
211	CL U Y	CL U S Y	CL U S Y	CL U Y	CL U S Y	CL U S Y	CL U S Y
212	CL U Y	CL U S Y	CL U S Y	CL U Y	CL U S Y	CL U S Y	CL U S Y
213		CL U S	CL U S	CL U	CL U S	CL U S	CL U S
215		CL U S	CL U S	CL U	CL U S	CL U S	CL U S
217		CL U	CL U	CL U	CL U	CL U	CL U
220		CL U	CL U	CL U	CL U	CL U	CL U

200 Series Standard & Intermediate Duty End Cap Options

Size Code	Inner Ring Style	Pillow Blocks				Flange Blocks				Take-up Blocks	
		P3	PH3	PL3	PT3	FX3	F3	FB3	FC3	T3	TH3
203	CL	CL2116		CL2116		CL2116	CL2116				
	Y	CL2116		CL2116		CL2116	CL2116				
	U	CL2116		CL2116		CL2116	CL2116				
	W	CL2116		CL2116		CL2116	CL2116				
	S	CL2116		CL2116		CL2116	CL2116				
204	CL	CL2126		CL2126	CL2126	CL2126	CL2126	CL2126			CL2126
	Y	Y2126N		Y2126N	CL2126	Y2126N	Y2126N	Y2126N		Y2126	Y2126N
	U	Y2126N		Y2126N	CL2126	Y2126N	Y2126N	Y2126N		Y2126	Y2126N
	W	Y2126N		Y2126N	CL2126	Y2126N	Y2126N	Y2126N			Y2126N
	S	Y2126N		Y2126N	CL2126						
205	CL	CL2166		CL2166	CL2166	CL2166	CL2166	CL2166	CL2166		CL2166
	Y	Y2166N		Y2166N	CL2166	Y2166N	Y2166N	Y2166N	Y2166N	Y2166	Y2166N
	U	Y2166N		Y2166N	CL2166	Y2166N	Y2166N	Y2166N	Y2166N	Y2166	Y2166N
	W	Y2166N		Y2166N	CL2166	Y2166N	Y2166N	Y2166N	Y2166N		Y2166N
	S	Y2166N		Y2166N	CL2166						
206	CL	CL2196		CL2196	CL2196	CL2196	CL2196	CL2196	CL2196		CL2196
	Y	Y2196N	Y2196	Y2196N	CL2196	Y2196N	Y2196N	Y2196N	Y2196N	Y2196	Y2196N
	U	Y2196N	Y2196	Y2196N	CL2196	Y2196N	Y2196N	Y2196N	Y2196N	Y2196	Y2196N
	W	Y2196N		Y2196N	CL2196	Y2196N	Y2196N	Y2196N	Y2196N		Y2196N
	S	Y2196N		Y2196N	CL2196						
207	CL	CL2236		CL2236	CL2236	CL2236	CL2236	CL2236	CL2236		CL2236
	Y	Y2236N	Y2236	Y2236N	CL2236	Y2236N	Y2236N	Y2236N	Y2236N	Y2236	Y2236N
	U	Y2236N	Y2236	Y2236N	CL2236	Y2236N	Y2236N	Y2236N	Y2236N	Y2236	Y2236N
	W	Y2236N		Y2236N	CL2236	Y2236N	Y2236N	Y2236N	Y2236N		Y2236N
	S	Y2236N		Y2236N	CL2236						
208	CL	CL2256		CL2256	CL2256	CL2256	CL2256		CL2256		CL2256
	Y	Y2256N		Y2256N	CL2256	Y2256N	Y2256N		Y2256N	Y2256	Y2256N
	U	Y2256N		Y2256N	CL2256	Y2256N	Y2256N		Y2256N	Y2256	Y2256N
	W	Y2256N		Y2256N	CL2256	Y2256N	Y2256N		Y2256N		Y2256N
	S	Y2256N		Y2256N	CL2256						
209	CL	CL2286		CL2286	CL2286	CL2286	CL2286		CL2286		CL2286
	Y	Y2286N	Y2286	Y2286N	CL2286	Y2286N	Y2286N		Y2286N	Y2286	Y2286N
	U	Y2286N	Y2286	Y2286N	CL2286	Y2286N	Y2286N		Y2286N	Y2286	Y2286N
	W	Y2286N		Y2286N	CL2286	Y2286N	Y2286N		Y2286N		Y2286N
	S	Y2286N		Y2286N	CL2286						
210	CL	CL2316		CL2316	CL2316	CL2316	CL2316		CL2316		CL2316
	Y	Y2316N	Y2316	Y2316N	CL2316	Y2316N	Y2316N		Y2316N	Y2316	Y2316N
	U	Y2316N	Y2316	Y2316N	CL2316	Y2316N	Y2316N		Y2316N	Y2316	Y2316N
	W	Y2316N		Y2316N	CL2316	Y2316N	Y2316N		Y2316N		Y2316N
	S	Y2316N		Y2316N	CL2316						
211	CL	CL2356		CL2356		CL2356	CL2356		CL2356		CL2356
	Y	CL2356	Y2356	CL2356		Y2356	Y2356		Y2356	Y2356	Y2356
	U	CL2356	Y2356	CL2356		Y2356	Y2356		Y2356	Y2356	Y2356
	S	CL2356		CL2356							
212	CL	CL2396		CL2396			CL2396		CL2396		CL2396
	Y	CL2396	Y2396	CL2396			Y2396		Y2396		Y2396
	U	CL2396	Y2396	CL2396			Y2396		Y2396		Y2396
	S	CL2396		CL2396							
213	CL										
	U	U2436C					U2436C		U2436C		
215	CL	CL2486					CL2486		CL2486		
	U	U2476C					U2476C		U2476C		
	S										
217	CL										
	U	U2556C					U2556C		U2556C		
220	CL										
	U	U2636C							U2636C		

No offering

Requires non-standard housing

Caps ending in "6N" are polypropylene material, all others are steel.

Caps not available in housing styles not listed.

200 Series Ball Bearings Selection Guide

To select a bearing, determine the applied radial load, the applied thrust load, the desired Rating Life, and applicable operating conditions. The procedure shown here will aid in selecting a bearing to meet an L_{10} design life. The formulas for calculating life expectancy should be used to determine the Rating Life L_{10} for the bearing selected.

The selection procedures and rating formulas shown here are in agreement with The American Bearing Manufacturers Association Standards and ANSI/ABMA Standards STD 9-1990. Ratings are based on fatigue life. The Rating Life or fatigue life at 90% reliability is the usual basis for bearing selection.

Series C200, U200, Y200, and hex, square and round bore bearings have wide inner rings for load support; however, the S200 and W200 series are extended on one side only for compactness and low cost. In combination with its companion line of economically designed housings, this series is applicable to light or moderate duty requirements. Where non-relubricatable bearings are used, bearing life is often limited by grease life, which is in turn affected by operating conditions. Also, economically designed housings must be applied within proportionate load limits. To assure a satisfactory bearing application, fitting practice, mounting, lubrication, sealing, static rating, housing strength, operating conditions and maintenance must be considered.

Steps for Selection

Step 1

Determine an appropriate L_{10} design life.

Type of service	Operating time, hours per year	Design life, years	L_{10} design life, hours
Light seasonal usage	500 to 750	3-5	3,000
Heavy seasonal usage	1,400 to 1,600	4-6	8,000
Industrial—8 hour shift	2,000	10	20,000

Step 2

Determine a required $\left(\frac{C}{P}\right)$ from Table 1.

Step 3

Calculate the required C and select a ball bearing.

a For radial load only:

$P = F_r$

required $C = \left(\frac{C}{P}\right) P$ using $\left(\frac{C}{P}\right)$ from Step 2

Select a ball bearing from Table 3 with a basic load rating C equal to or greater than the required C.

b For combined radial and thrust loads when $\frac{F_a}{F_r}$ is 0.19 or less:

$P = F_r$

required $C = \left(\frac{C}{P}\right) P$ using $\left(\frac{C}{P}\right)$ from Step 2

Select a ball bearing from Table 3 with a basic load rating C equal to or greater than the required C.

Step 3 (continued)

c For combined radial and thrust loads when $\frac{F_a}{F_r}$ is greater than 0.19, use the following trial method:

Maximum $P = .56F_r + 2.30F_a$

Maximum required $C = \left(\frac{C}{P}\right) P$ using $\left(\frac{C}{P}\right)$ from Step 2

Select a trial ball bearing with a basic load rating C from Table 3 approximately equal to the maximum required C.

With this trial bearing calculate: $\frac{F_a}{Nd^2}$

Determine X and Y from Table 2.

Calculate P for the trial bearing.

$P = XF_r + YF_a$

required $C = \left(\frac{C}{P}\right) P$ for the trial bearing using $\left(\frac{C}{P}\right)$ from Step 2

Consult Table 3, basic load rating. If a smaller bearing meets or nearly meets the required C, its life expectancy can be calculated. Note: If the load P is greater than .25C for series C200, U200, Y200, hex, square, and round bore bearings or greater than .15C for series S200 and W200, consult Rexnord Bearing Products.

Selection

Symbols for formulas:

C = basic load rating, pounds (or newtons)
C_o = static load rating, pounds (or newtons)
e = a reference value
F_a = thrust load, pounds (or newtons)
F_r = radial load, pounds (or newtons)
L_{10} = rating life, hours
n = speed, revolutions per minute
P = equivalent radial load, pounds (or newtons)
X = radial factor
Y = thrust factor

Table 1 • Relation of L_{10} life a nd speed to $\left(\frac{C}{P}\right)$

Bearing life, hours L10	$\left(\frac{C}{P}\right)$ ratio								
	Speed, n								
	50	100	200	300	400	500	600	700	800
3000	2.08	2.62	3.30	3.77	4.15	4.47	4.75	5.01	5.23
4000	2.29	2.88	3.63	4.15	4.57	4.92	5.23	5.51	5.76
5000	2.46	3.10	3.91	4.47	4.92	5.30	5.64	5.93	6.20
6000	2.62	3.30	4.15	4.75	5.23	5.64	5.99	6.30	6.59
8000	2.88	3.63	4.57	5.23	5.76	6.20	6.59	6.94	7.25
10000	3.10	3.91	4.92	5.64	6.20	6.68	7.10	7.47	7.81
12000	3.30	4.15	5.23	5.99	6.59	7.10	7.54	7.94	8.30
14000	3.47	4.37	5.51	6.30	6.94	7.47	7.94	8.36	8.74
16000	3.63	4.57	5.76	6.59	7.25	7.81	8.30	8.74	9.14
18000	3.77	4.75	5.99	6.86	7.54	8.13	8.63	9.09	9.50
20000	3.91	4.92	6.20	7.10	7.81	8.42	8.94	9.41	9.84
25000	4.21	5.30	6.68	7.65	8.42	9.07	9.63	10.1	10.6
30000	4.47	5.64	7.10	8.13	8.94	9.63	10.2	10.8	11.3
35000	4.71	5.93	7.47	8.55	9.41	10.1	10.8	11.3	11.9
40000	4.92	6.20	7.81	8.94	9.84	10.6	11.3	11.9	12.4
45000	5.12	6.45	8.13	9.30	10.2	11.0	11.7	12.3	12.9
50000	5.30	6.68	8.42	9.63	10.6	11.4	12.1	12.8	13.4
60000	5.64	7.10	8.94	10.2	11.3	12.1	12.9	13.6	14.2
70000	5.93	7.47	9.41	10.8	11.9	12.8	13.6	14.3	14.9
80000	6.20	7.81	9.84	11.3	12.4	13.4	14.2	14.9	15.6
90000	6.45	8.13	10.2	11.7	12.9	13.9	14.8	15.5	16.2
100000	6.68	8.42	10.6	12.1	13.4	14.4	15.3	16.1	16.8
150000	7.65	9.63	12.1	13.9	15.3	16.5	17.5	18.4	19.3
200000	8.42	10.6	13.4	15.3	16.8	18.1	19.3	20.3	21.2
	Speed, n								
	900	1000	1200	1500	1800	2400	3600	6000	10000
3000	5.44	5.64	5.99	6.45	6.86	7.54	8.63	10.2	12.1
4000	5.99	6.20	6.59	7.10	7.54	8.30	9.50	11.3	13.4
5000	6.45	6.68	7.10	7.65	8.13	8.94	10.2	12.1	14.4
6000	6.86	7.10	7.54	8.13	8.63	9.50	10.9	12.9	15.3
8000	7.54	7.81	8.30	8.94	9.50	10.5	12.0	14.2	16.8
10000	8.13	8.42	8.94	9.63	10.2	11.3	12.9	15.3	18.1
12000	8.63	8.94	9.50	10.2	10.9	12.0	13.7	16.2	19.3
14000	9.09	9.41	10.0	10.8	11.4	12.6	14.4	17.1	20.3
16000	9.50	9.84	10.5	11.3	12.0	13.2	15.1	17.9	21.2
18000	9.88	10.2	10.9	11.7	12.4	13.7	15.7	18.6	22.0
20000	10.2	10.6	11.3	12.1	12.9	14.2	16.2	19.3	22.8
25000	11.0	11.4	12.1	13.1	13.9	15.3	17.5	20.7	24.6
30000	11.7	12.1	12.9	13.9	14.8	16.2	18.6	22.0	26.1
35000	12.3	12.8	13.6	14.6	15.5	17.1	19.6	23.2	27.5
40000	12.9	13.4	14.2	15.3	16.2	17.9	20.5	24.3	28.7
45000	13.4	13.9	14.8	15.9	16.9	18.6	21.3	25.2	29.9
50000	13.9	14.4	15.3	16.5	17.5	19.3	22.0	26.1	31.0
60000	14.8	15.3	16.2	17.5	18.6	20.5	23.4	27.8	32.9
70000	15.5	16.1	17.1	18.4	19.6	21.5	24.6	29.2	34.6
80000	16.2	16.8	17.9	19.3	20.5	22.5	25.8	30.5	36.2
90000	16.9	17.5	18.6	20.0	21.3	23.4	26.8	31.8	37.7
100000	17.5	18.1	19.3	20.7	22.0	24.3	27.8	32.9	39.0
150000	20.0	20.7	22.0	23.7	25.2	27.8	31.8	37.7	44.6
200000	22.0	22.8	24.3	26.1	27.8	30.5	35.0	41.4	49.1

Basic formula

$$\left(\frac{C}{P}\right) = \left(\frac{L_{10} \times n \times 60}{1{,}000{,}000}\right)^{1/3}$$

$$L_{10} = \frac{\left(\frac{C}{P}\right)^3 \times 1{,}000{,}000}{n \times 60}$$

Life Expectancy

To calculate the Rating Life L_{10} of any selected or trial bearing:

Step 1 Determine the equivalent radial load P.

a For radial load only:
$P = F_r$

b For combined radial and thrust load:
$P = XF_r + YF_a$ using X and Y from Table 2 below.

Step 2 Calculate the ratio of basic load rating C to the equivalent radial load.

$$\left(\frac{C}{P}\right)$$

Step 3 Approximate the bearing life from Table 1.

Table 2 • X and Y factors for ball bearings

$\frac{F_a}{Nd^2}$	e	$\frac{F_a}{F_r} \le e$		$\frac{F_a}{F_r} > e$	
		X	Y	X	Y
25	.19	1.0	0	.56	2.30
37.5	.21	1.0	0	.56	2.15
50	.22	1.0	0	.56	1.99
75	.24	1.0	0	.56	1.85
100	.26	1.0	0	.56	1.71
125	.27	1.0	0	.56	1.63
150	.28	1.0	0	.56	1.56
200	.30	1.0	0	.56	1.45
300	.34	1.0	0	.56	1.31
500	.38	1.0	0	.56	1.15
750	.42	1.0	0	.56	1.04
1000	.44	1.0	0	.56	1.00

For values between those in the table linear interpolation can be used.

Life Adjustment

The Rating Life, L_{10}, may be modified for some applications in accordance with the formula

$$L'_n = a_1 a_2 a_3 L_{10}$$

where L'_n = Adjusted life for (100-n) % reliablility,

a_1 = Life adjustment factor for reliability

a_2 = Life adjustment factor for material and processing

a_3 = Life adjustment factor for operating conditions.

For most normal applications, all factors will be taken as 1, and the Rating Life used as the selection basis or life estimate. In addition, as long as standard catalog bearings are used, *a2* will be normally set equal to one. The factor *a3* covers such things as lubrication, misalignment, and temperature. Some conditions that could yield *a3* significantly different than unity include speeds less than 20000 DN or greater than 200000 DN, temperatures below –40°F *(–40°C)* or above 275°F *(135°C)*. For other possible conditions, as well as additional information on life adjustment factors, consult Rexnord Bearing Products.

Table 3 • Load Ratings, Speed Limits and Ball Data

Size Code	C Basic load rating		Co Static load rating		Approximate speed limit RPM*				d Ball diameter	N Number of balls	Nd^2
	pounds	newtons	pounds	newtons	N & H Seals	E Seals‡	E3 Seals	Flingers	inches		
203	2360	*10500*	1110	*4490*	12000	9000		15800	19/64	7	0.617
204	2870	*12800*	1480	*6590*	10000	7500		13400	5/16	8	0.781
205	3150	*14000*	1760	*7830*	9600	6800	1000	11400	5/16	9	0.879
206	4390	*19500*	2530	*11300*	8000	5600		9800	3/8	9	1.27
207	5810	*25800*	3440	*15300*	6850	4800	700	8400	7/16	9	1.72
208	7330	*32600*	4460	*19900*	6000	4500	650	7500	1/2	9	2.25
209	7370	*32800*	4590	*20400*	5330	4000	600	6800	1/2	9	2.25
210	7920	*35200*	5220	*23200*	4800	3600	550	6400	1/2	10	2.50
211	9800	*43600*	6570	*29200*	4360	3200	500	5800	9/16	10	3.16
212	11840	*52700*	8080	*36000*	4000	3000	450	5300	5/8	10	3.91
213	12920	*57500*	9010	*40100*	3850	2850	400		21/32	10	4.31
215	15080	*67000*	11100	*49200*	3300	2700	350	4400	11/16	11	5.20
217	18850	*83850*	14300	*63600*	2950	2550	300	4050	25/32	11	6.71
220	27560	*122550*	20900	*92900*	2500	2250		3600	1	10	10.00

If the load P is greater than 15% of the C rating for S200 and W200 or 25% of the C rating for all others, consult Rexnord Bearing Division.

For U200, Y200, S200 and W200 Series reduce C Basic Load Rating by 23%

For CL200 Series reduce C Basic Load Rating by 15%.

* Based on grease lubrication and moderate load.

‡ E seal operation at higher speeds up to H seal speed limit is allowable providing the lip seal friction does not result in operating temperatures over 225°F *(107°C)*.

Table 4 • Radial load ratings in pounds at various RPM for appropriate L_{10} life hours

Bearing Size Number			Radial Load Ratings, Pounds																	
			Speed, RPM																	
CL200 Y200 U200 W200 S200	Size Code	L_{10} Minimum life, hours	50	100	200	300	400	500	600	700	800	900	1000	1200	1500	1800	2000	2500	3000	3500
2B08	203	8000	820	651	517	451	410	381	358	340	326	313	302	284	264	248	240	223	210	199
210		20000	604	480	381	333	302	281	264	251	240	231	223	210	195	183	177	164	154	147
211		40000	480	381	302	264	240	223	210	199	190	183	177	166	154	145	140	130	123	116
2M17		100000	353	281	223	195	177	164	154	147	140	135	130	123	114	107	103	96	90	86
212	204	8000	996	791	627	548	498	462	435	413	395	380	367	345	321	302	291	270	254	242
		20000	734	582	462	404	367	341	321	304	291	280	270	254	236	222	215	199	187	178
2M20		40000	582	462	367	321	291	270	254	242	231	222	215	202	187	176	170	158	149	141
		100000	429	341	270	236	215	199	187	178	170	164	158	149	138	130	125	116	110	104
214	205	8000	1095	869	690	603	548	508	478	454	435	418	403	380	352	332	320	297	280	266
215		20000	807	640	508	444	403	375	352	335	320	308	297	280	260	244	236	219	206	196
216		40000	640	508	403	352	320	297	280	266	254	244	236	222	206	194	187	174	164	155
2M25		100000	472	375	297	260	236	219	206	196	187	180	174	164	152	143	138	128	121	115
218	206	8000	1523	1209	960	838	762	707	665	632	605	581	561	528	490	461	445	413	389	370
219		20000	1122	891	707	618	561	521	490	466	445	428	413	389	361	340	328	305	287	272
2E20		40000	891	707	561	490	445	413	389	370	354	340	328	309	287	270	260	242	228	216
2M30		100000	656	521	413	361	328	305	287	272	260	250	242	228	211	199	192	178	168	159
220	207	8000	2015	1599	1269	1109	1007	935	880	836	799	769	742	698	648	610	589	547	515	489
222		20000	1484	1178	935	817	742	689	648	616	589	566	547	515	478	450	434	403	379	360
223		40000	1178	935	742	648	589	547	515	489	468	450	434	408	379	357	344	320	301	286
2M35		100000	868	689	547	478	434	403	379	360	344	331	320	301	279	263	254	236	222	211
224	208	8000	2542	2017	1601	1399	1271	1180	1110	1055	1009	970	936	881	818	770	743	690	649	617
		20000	1873	1486	1180	1031	936	869	818	777	743	715	690	649	603	567	548	508	478	454
2M40		40000	1486	1180	936	818	743	690	649	617	590	567	548	515	478	450	435	403	380	361
		100000	1095	869	690	603	548	508	478	454	435	418	403	380	352	332	320	297	280	266
226	209	8000	2555	2028	1610	1406	1278	1186	1116	1060	1014	975	941	886	822	774	747	694	653	620
227		20000	1883	1494	1186	1036	941	874	822	781	747	718	694	653	606	570	551	511	481	457
228		40000	1494	1186	941	822	747	694	653	620	593	570	551	518	481	453	437	406	382	363
2M45		100000	1101	874	694	606	551	511	481	457	437	420	406	382	354	333	322	299	281	267
231	210	8000	2745	2178	1729	1510	1372	1274	1199	1139	1089	1047	1011	952	883	831	803	745	701	666
2E32		20000	2022	1605	1274	1113	1011	939	883	839	803	772	745	701	651	612	591	549	517	491
		40000	1605	1274	1011	883	803	745	701	666	637	612	591	556	517	486	469	436	410	389
2M50		100000	1183	939	745	651	591	549	517	491	469	451	436	410	381	358	346	321	302	287
232	211	8000	3398	2697	2141	1870	1699	1577	1484	1410	1349	1297	1252	1178	1094	1029	994	922	868	825
235		20000	2504	1987	1577	1378	1252	1162	1094	1039	994	955	922	868	806	758	732	680	640	608
		40000	1987	1577	1252	1094	994	922	868	825	789	758	732	689	640	602	581	539	508	482
2M55		100000	1464	1162	922	806	732	680	640	608	581	559	539	508	471	443	428	397	374	355
							E3 SEALS													
236	212	8000	4106	3259	2586	2259	2053	1906	1793	1704	1629	1567	1513	1423	1321	1243	1201	1114	1049	996
238		20000	3025	2401	1906	1665	1513	1404	1321	1255	1201	1154	1114	1049	974	916	885	821	773	734
239		40000	2401	1906	1513	1321	1201	1114	1049	996	953	916	885	832	773	727	702	652	613	583
2M60		100000	1769	1404	1114	974	885	821	773	734	702	675	652	613	569	536	517	480	452	429
																N & E SEALS				
240	213	8000	4480	3556	2822	2465	2240	2079	1957	1859	1778	1709	1650	1553	1442	1357	1310	1216	1144	1087
243		20000	3301	2620	2079	1816	1650	1532	1442	1370	1310	1259	1216	1144	1062	1000	965	896	843	801
		40000	2620	2079	1650	1442	1310	1216	1144	1087	1040	1000	965	908	843	793	766	711	669	636
2M65		100000	1930	1532	1216	1062	965	896	843	801	766	737	711	669	621	585	564	524	493	468
244	215	8000	5228	4149	3293	2877	2614	2427	2284	2169	2075	1995	1926	1812	1683	1583	1529	1419	1335	
247		20000	3852	3057	2427	2120	1926	1788	1683	1598	1529	1470	1419	1335	1240	1167	1126	1046	984	
2E48		40000	3057	2427	1926	1683	1529	1419	1335	1269	1213	1167	1126	1060	984	926	894	830	781	
2M75		100000	2253	1788	1419	1240	1126	1046	984	935	894	860	830	781	725	682	659	611	575	
255	217	8000	6535	5187	4117	3596	3267	3033	2854	2711	2593	2494	2407	2266	2103	1979	1911	1774		
2E56		20000	4815	3822	3033	2650	2407	2235	2103	1998	1911	1837	1774	1669	1550	1458	1408	1307		
		40000	3822	3033	2407	2103	1911	1774	1669	1586	1517	1458	1408	1325	1230	1157	1117	1037		
2M85		100000	2816	2235	1774	1550	1408	1307	1230	1168	1117	1074	1037	976	906	853	823	764		
263	220	8000	9555	7583	6019	5258	4777	4435	4173	3964	3792	3646	3520	3312	3075	2894	2794			
2E64		20000	7040	5588	4435	3874	3520	3268	3075	2921	2794	2686	2593	2441	2266	2132	2058			
		40000	5588	4435	3520	3075	2794	2593	2441	2318	2217	2132	2058	1937	1798	1692	1634			
2M100		100000	4117	3268	2593	2266	2058	1911	1798	1708	1634	1571	1517	1427	1325	1247	1204			

If the load P is greater than 15% of the C rating for S200 and W200 or 25% of the C rating for all others, consult Rexnord Bearing Division.

For U200, Y200, S200 and W200 Series reduce C Basic Load Rating by 23%.

For CL200 Series reduce C Basic Load Rating by 15%.

Operation in the high speed shaded areas requires frequent lubrication.

Housing Bearing Seat Diameters For Cylindrical O.D. Ball Bearings

Class of fit selection

Housing Construction	Operating Condition			Class of fit*	Remarks
Housing not split radially	Housing rotating in relation to direction of load	Normal and heavy loads		N6	Outer ring not axially displaceable
		Light loads		M6	
	Direction of load indeterminate	Heavy shock loads			
		Normal and heavy loads where outer ring does not have to be axially displaceable		K6	Outer ring, as a rule, not axially displaceable
Housing split or not split radially		Normal and light loads where displaceability of outer ring is desirable		J6	Outer ring, as a rule, axially displaceable
	Housing stationary in relation to direction of loads	Shock loads temporary complete unloading			
		All loads	Housing not split radially	H6	Outer ring is easily displaceable axially
			Housing split radially	H7	

*For cast iron or steel housings. For housings of light metal, select tolerances which give slightly tighter fits than those shown.

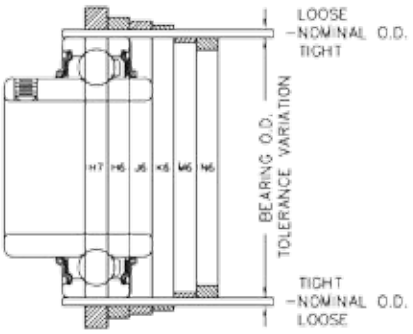

Class of fit and housing bores (inches/µm)

Basic Size W200, Y200, U200, C200	Basic Size R200, S200, K200,	Nominal Bearing O.D. and Housing Bore mm	Nominal Bearing O.D. and Housing Bore inches	Bearing O.D. Tolerance △	Bearing/housing diameter fits ▲ H7 Tolerance Fit	H7 Housing Bore	H6 Tolerance Fit	H6 Housing Bore	J6 Tolerance Fit	J6 Housing Bore	K6 Tolerance Fit	K6 Housing Bore	M6 Tolerance Fit	M6 Housing Bore	N6 Tolerance Fit	N6 Housing Bore
				+.0000	.0000	–.0000	.00000	–.0000	.0002T	–.0002	.0005T	–.0005	.0008T	–.0008	.0011T	–.0011
2M17	211	203	*40*	1.5748 –.0005	.0015L	+.0010	.0011L	+.0006	.0009L	+.0004	.0006L	+.0001	.0003L	–.0002	.0000	–.0005
2M20	212	204	*47*	1.8504 +0	0	– 0	0	– 0	5T	– 5	13T	–13	20T	–20	28T	–28
				–13	38L	+25	28L	+15	23L	+10	15L	+2	8L	–5	0	–13
2M25	216	205	*52*	2.0472 +.0000	.0000	–.0000	.0000	–.0000	.0002T	–.0002	.0006T	–.0006	.0010T	–.0010	.0013T	–.0013
2M30	219	206	*62*	2.4409 –.0005	.0017L	+.0012	.0012L	+.0007	.0010L	+.0005	.0006L	+.0001	.0002L	–.0003	.0001T	–.0006
2M35	223	207	*72*	2.8346 +0	0	– 0	0	– 0	5T	– 5	15T	–15	25T	–25	33T	– 43
2M40	225	208	*80*	3.1496 –13	43L	+30	30L	+17	26L	+13	15L	+2	5L	– 8	2T	–15
2M45	228	209	*85*	3.3465 +.0000	.0000	–.0000	.0000	–.0000	.0002T	–.0002	.0007T	–.0007	.0012T	–.0012	.0016T	–.0016
2M50	231	210	*90*	3.5433 –.0006	.0020L	+.0014	.0015L	+.0009	.0013L	+.0007	.0008L	+.0002	.0003L	–.0003	.0001T	–.0007
2M55	235	211	*100*	3.9370 +0	0	– 0	0	– 0	5T	– 5	18T	–18	30T	– 30	40T	– 40
2M60	239	212	*110*	4.3307 –15	50L	+35	38L	+23	33L	+18	20L	+5	8L	– 8	3T	–18

Please consult for availability.

1µm = *.001 mm*

The appropriate housing bore for any class of fit can be easily determined by applying the housing tolerance to the nominal housing bore.

Example, (using basic size 211 and class of fit H7):

		inches		mm	
Nominal housing bore	=	1.5748	1.5748	40.000	40.000
Housing bore tolerance	=	– .0000	+ .0010	– 0.000	+ 0.025
Resultant housing bore	=	1.5748	1.5758	40.000	40.025

▲ Symbol L indicates a loose or clearance fit. Symbol T indicates a tight or interference fit.

△ The arithmetical mean of the largest and smallest single diameter to be within tolerance shown. Allowable deviations from mean diameter per ANSI/ABMA Standard 20, latest printing.

ER, ER-K Series Housing Fits

Size Code	Outside Diameter of Bearing		Rotating Housing				Stationary Housing			
			Diameter		Resultant Fit		Diameter		Resultant Fit	
	Min	Max	Min	Max	Loose	Tight	Min	Max	Loose	Tight
204	1.8499	1.8540	1.8498	1.8504	0.0005	0.0006	1.8503	1.8509	0.0010	0.0001
205	2.0466	2.0472	2.0466	2.0471	0.0005	0.0006	2.0471	2.0476	0.0010	0.0001
206	2.4403	2.4409	2.4403	2.4408	0.0005	0.0006	2.4408	2.4413	0.0010	0.0001
207	2.8340	2.8346	2.8340	2.8345	0.0005	0.0006	2.8345	2.8350	0.0010	0.0001
208	3.1490	3.1496	3.1490	3.1495	0.0005	0.0006	3.1495	3.1500	0.0010	0.0001
209	3.3457	3.3465	3.3458	3.3464	0.0007	0.0007	3.3464	3.3470	0.0013	0.0001
210	3.5425	3.5433	3.5426	3.5432	0.0007	0.0007	3.5432	3.5438	0.0013	0.0001
211	3.9362	3.9370	3.9363	3.9369	0.0007	0.0007	3.9369	3.9375	0.0013	0.0001
212	4.3299	4.3307	4.3300	4.3306	0.0007	0.0007	4.3306	4.3312	0.0013	0.0001
214	4.9203	4.9213	4.9204	4.9212	0.0009	0.0009	4.9211	4.9219	0.0016	0.0002
215	5.1171	5.1181	5.1172	5.1180	0.0009	0.0009	5.1179	5.1187	0.0016	0.0002
216	5.5108	5.5118	5.5109	5.5117	0.0009	0.0009	5.5116	5.5124	0.0016	0.0002

P3CL200N

Interchange: *P2BDL, GRP200, NP-T*

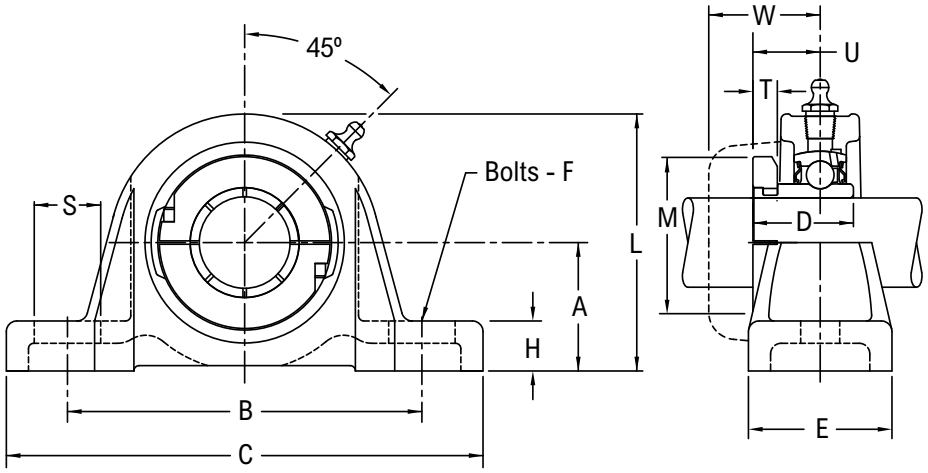

Product Features

- Corrosion resistant powder coating
- Cast iron housing
- Broad range of sealing options
- Wide inner ring for increased shaft stability
- Centrik-Lok CL shaft locking device
- Alignable and relubricatable
- Black Oxide
- See Features and Benefits for additional info on pages 286 - 287.

Bearing Dimensions

Size Code	Shaft Diameter	Part Number	A Base to Centerline Height	B Distance Between Bolt Holes	C	D	E	F Bolts	H	L	M	S	U	W	Approx. Weight
203	1/2	P3CL2B08N *■	1 3/16	3 1/2	4 5/8	1 3/32	1 5/16	3/8	1/2	2 11/32	1 5/8	3/4	41/64	1 13/64	1.00
	5/8	P3CL210N *■													
	11/16	P3CL211N *■													
	17.00	*P3CL2M17N *■*	*30.16*	*88.90*	*117.50*	*27.78*	*33.33*	*10.00*	*12.70*	*59.50*	*41.28*	*19.00*	*16.30*	*30.60*	*0.45*
204	3/4	P3CL212N *■	1 5/16	3 7/8	5 1/8	1 9/32	1 7/16	3/8	1/2	2 19/32	2 1/16	3/4	3/4	1 19/64	1.70
	20.00	*P3CL2M20N *■*	*33.34*	*98.40*	*130.20*	*32.54*	*36.51*	*10.00*	*12.70*	*65.90*	*52.39*	*19.00*	*19.00*	*32.90*	*0.76*
205	7/8	P3CL214N Δ*■	1 7/16	4	5 3/8	1 23/64	1 21/64	3/8	9/16	2 7/8	2 13/64	3/4	51/64	1 9/32	1.90
	15/16	P3CL215N Δ*■													
	1	P3CL216N Δ*■													
	25.00	*P3CL2M25N Δ*■*	*36.51*	*101.60*	*136.50*	*34.53*	*33.73*	*10.00*	*14.30*	*73.00*	*55.96*	*19.00*	*20.20*	*32.50*	*0.86*
206	1 1/8	P3CL218N Δ*■	1 11/16	4 5/8	6 5/16	1 9/16	1 5/8	1/2	11/16	3 5/16	2 19/32	15/16	61/64	1 29/64	2.70
	1 3/16	P3CL219N Δ*■													
	1 1/4	P3CL2E20N Δ*■													
	30.00	*P3CL2M30N Δ*■*	*42.86*	*117.50*	*160.30*	*39.69*	*41.27*	*12.00*	*17.50*	*84.10*	*65.88*	*23.80*	*24.20*	*36.90*	*1.22*
207	1 1/4	P3CL220N Δ*■	1 7/8	4 15/16	6 3/8	1 49/64	1 3/4	1/2	13/16	3 11/16	3 3/64	7/8	1 7/64	1 35/64	3.70
	1 3/8	P3CL222N Δ*■													
	1 7/16	P3CL223N Δ*■													
	35.00	*P3CL2M35N Δ*■*	*47.62*	*125.40*	*161.90*	*44.85*	*44.45*	*12.00*	*20.60*	*93.70*	*77.39*	*22.22*	*28.20*	*39.30*	*1.67*
208	1 1/2	P3CL224N Δ*■	2	5 3/8	7 1/16	1 29/32	1 7/8	1/2	13/16	4	3 3/16	15/16	1 11/64	1 41/64	4.70
	40.00	*P3CL2M40N Δ*■*	*50.80*	*136.50*	*179.40*	*48.42*	*47.60*	*12.00*	*20.60*	*101.60*	*80.96*	*23.80*	*29.80*	*41.70*	*2.12*
209	1 5/8	P3CL226N Δ*■	2 1/8	5 11/16	7 1/4	2 1/32	2	1/2	13/16	4 5/16	3 3/8	1	1 15/64	1 21/32	5.40
	1 11/16	P3CL227N Δ*■													
	1 3/4	P3CL228N Δ*■													
	45.00	*P3CL2M45N Δ*■*	*53.98*	*144.46*	*184.20*	*51.59*	*50.80*	*12.00*	*20.60*	*109.50*	*85.73*	*25.40*	*31.40*	*42.10*	*2.43*

Continued...

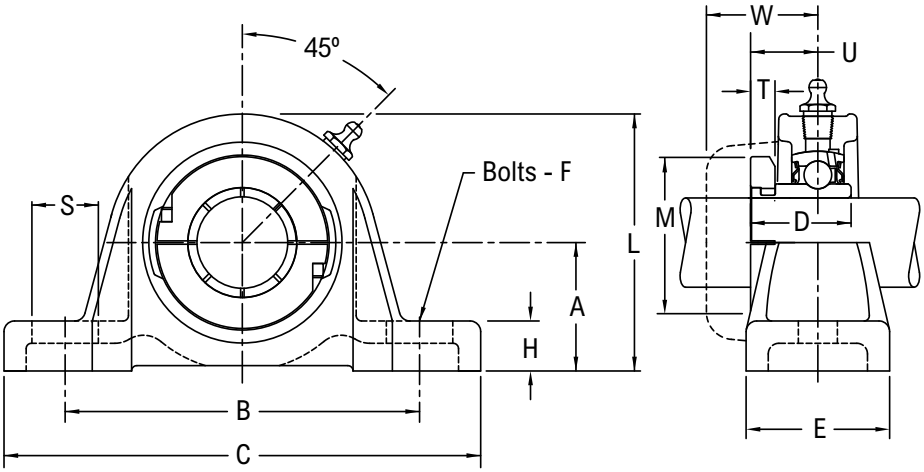

Continued...

Bearing Dimensions

Size Code	Shaft Diameter	Part Number	A Base to Centerline Height	B Distance Between Bolt Holes	C	D	E	F Bolts	H	L	M	S	U	W	Approx. Weight
210	1 15/16	P3CL231N Δ*■	2 1/4	6 3/16	7 7/8	2 3/32	2 1/8	5/8	7/8	4 9/16	3 3/4	15/16	1 17/64	1 25/32	6.10
	2	P3CL2E32N Δ*■													
	50.00	*P3CL2M50N Δ*■*	*57.15*	*157.20*	*200.00*	*53.18*	*54.00*	*16.00*	*22.20*	*115.88*	*95.25*	*23.80*	*32.10*	*45.20*	*2.75*
211	2	P3CL232N Δ*■	2 1/2	6 29/32	8 7/8	2 1/4	2 5/16	5/8	1	5	4 5/64	1 7/32	1 13/32	2 1/64	7.80
	2 3/16	P3CL235N Δ*■													
	55.00	*P3CL2M55N Δ*■*	*63.50*	*175.41*	*225.42*	*57.15*	*58.73*	*16.00*	*25.40*	*127.00*	*103.58*	*30.95*	*35.70*	*51.20*	*3.51*
212	2 1/4	P3CL236N Δ*■	2 11/16	7 1/2	9 1/2	2 1/2	2 3/8	5/8	1 1/8	5 3/8	4 9/32	1 1/8	1 9/16	2 7/64	11.40
	2 3/8	P3CL238N Δ*■													
	2 7/16	P3CL239N Δ*■													
	60.00	*P3CL2M60N Δ*■*	*68.26*	*190.50*	*241.30*	*63.50*	*60.32*	*16.00*	*28.60*	*136.50*	*108.74*	*28.57*	*39.70*	*53.60*	*5.13*
213	2 1/2	P3CL240NΔ*	3	8 1/8	10 1/2	2 3/4	2 7/8	3/4	1 5/16	6	4 51/64	1 3/16	1 3/4	2 15/64	15.90
	2 11/16	P3CL243NΔ*													
	65.00	*P3CL2M65NΔ**	*76.20*	*206.40*	*266.70*	*69.85*	*73.00*	*20.00*	*33.30*	*152.40*	*121.84*	*30.20*	*44.45*	*56.75*	*7.16*
215	2 3/4	P3CL244NΔ*	3 1/4	8 7/8	11 3/4	2 59/64	3 1/4	3/4	1 3/8	6 1/2	5 1/4	1 5/16	1 27/32	2 29/64	19.50
	2 15/16	P3CL247NΔ*													
	3	P3CL2E48NΔ*													
	75.00	*P3CL2M75NΔ**	*82.55*	*225.40*	*298.40*	*74.22*	*82.60*	*20.00*	*34.90*	*165.10*	*133.35*	*33.30*	*46.83*	*62.31*	*8.78*
217	3 7/16	P3CL255NΔ*	3 3/4	10	13	3 39/64	3 1/2	7/8	1 5/8	7 7/16	5 23/32	1 5/8	2 11/64	2 57/64	28.70
	3 1/2	P3CL2E56NΔ*													
	85.00	*P3CL2M85NΔ**	*95.25*	*254.00*	*330.20*	*91.68*	*88.90*	*24.00*	*41.30*	*188.90*	*145.26*	*41.30*	*55.17*	*73.42*	*12.92*
220	3 15/16	P3CL263N*	4 7/16	11 7/8	15 1/4	4 7/64	4 1/4	7/8	1 13/16	8 7/8	6 1/2	1 7/8	2 7/16	3	50.20
	4	P3CL2E64N*													
	100.00	*P3CL2M100N**	*112.71*	*301.60*	*387.40*	*104.38*	*108.00*	*24.00*	*46.00*	*225.40*	*165.10*	*47.60*	*61.91*	*76.20*	*22.60*

Additional Notes

Please call 1-866-REXNORD for availability

Lubrication fitting tap size: for size code 203, 1/4 in-28 UNF: for all other size codes, 1/8 in PT

Base to centerline tolerance, +0.000 in/-0.010 in *(+0.00 mm/-0.25 mm)*

* N lip seals standard

■ Available with H labyrinth seals

Δ Available with E3 triple lip seals

Nickel plated housings available through all size codes, add suffix K75

For the Selection Guide, Load Ratings and Speed Limits, see the Link-Belt 200 Series Ball Bearing Engineering section on pages 290 - 298.

Note: Dimensions subject to change. Certified dimensions of ordered material furnished on request.

P3Y200

Interchange: *P2BSXR, SY-WF, HCP200, RAS*

Photo Shows a 2-Bolt Ball Bearing Pillow Block Unit

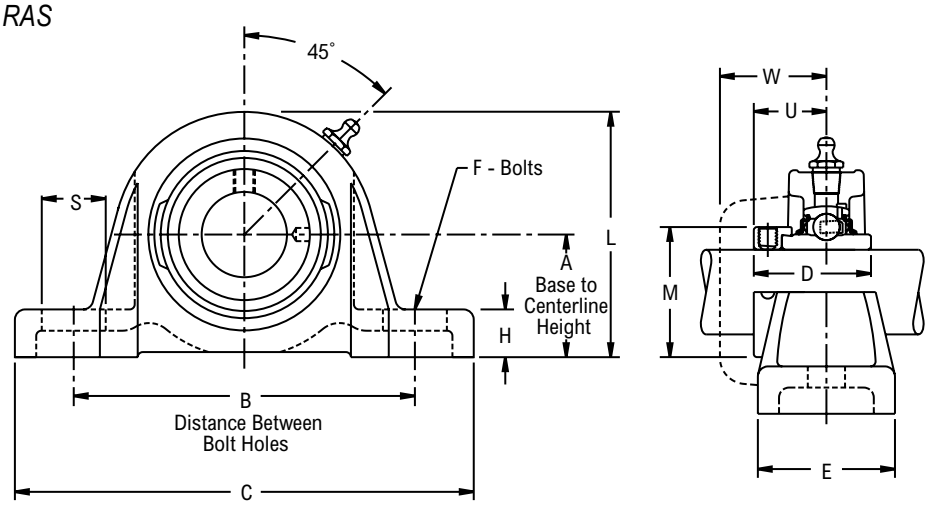

Product Features

- Corrosion-resistant powder coating
- Cast iron housing
- Broad range of sealing options
- Wide inner ring for increased shaft stability
- Eccentric cam locking device
- Alignable & relubricatable
- See Features and Benefits for additional info on pages 286 - 287.

Bearing Dimensions

Size Code	Shaft Diameter	Part Number	A Base to Centerline Height	B Distance Between Bolt Holes	C	D	E	F Bolts	H	L	M	S	U	W	Approx. Weight
203	1/2	P3Y2B08N *■	1 3/16	3 1/2	4 5/8	1 15/32	1 5/16	3/8	1/2	2 11/32	1 1/8	3/4	59/64	1 13/64	1.10
	5/8	P3Y210N *■													
	11/16	P3Y211N *■													
204	3/4	P3Y212N *■	1 5/16	3 7/8	5 1/8	1 23/32	1 7/16	3/8	1/2	2 19/32	1 5/16	3/4	1 3/64	1 19/64	1.80
205	7/8	P3Y214N *Δ■	1 7/16	4	5 3/8	1 3/4	1 21/64	3/8	9/16	2 7/8	1 1/2	3/4	1 1/16	1 9/32	2.00
	15/16	P3Y215N *Δ■													
	1	P3Y216N *Δ■													
206	1 1/8	P3Y218N *Δ■	1 11/16	4 5/8	6 5/16	1 29/32	1 5/8	1/2	11/16	3 5/16	1 3/4	15/16	1 3/16	1 29/64	2.80
	1 3/16	P3Y219N *Δ■													
	1 1/4	P3Y2E20N *Δ■													
207	1 1/4	P3Y220N *Δ■	1 7/8	4 15/16	6 3/8	2 1/64	1 3/4	1/2	13/16	3 11/16	2 3/16	7/8	1 9/32	1 35/64	4.00
	1 3/8	P3Y222N *Δ■													
	1 7/16	P3Y223N *Δ■													
208	1 1/2	P3Y224N *Δ■	2	5 3/8	7 1/16	2 7/32	1 7/8	1/2	13/16	4	2 3/8	15/16	1 3/8	1 41/64	5.00
209	1 5/8	P3Y226N *Δ■	2 1/8	5 11/16	7 1/4	2 7/32	2	1/2	13/16	4 5/16	2 1/2	1	1 3/8	1 21/32	5.70
	1 11/16	P3Y227N *Δ■													
	1 3/4	P3Y228N *Δ■													
210	1 15/16	P3Y231N *Δ■	2 1/4	6 3/16	7 7/8	2 15/32	2 1/8	5/8	7/8	4 1/2	2 3/4	15/16	1 1/2	1 25/32	6.40
	2	P3Y2E32N *Δ■													
211	2	P3Y232N *Δ■	2 1/2	6 29/32	8 7/8	2 13/16	2 5/16	5/8	1	5	3	1 7/32	1 23/32	2 1/64	8.40
	2 3/16	P3Y235N *Δ■													
212	2 1/4	P3Y236N *Δ■	2 11/16	7 1/2	9 1/2	3 1/16	2 3/8	5/8	1 1/8	5 3/8	3 5/16	1 1/8	1 27/32	2 7/64	11.60
	2 3/8	P3Y238N *Δ■													
	2 7/16	P3Y239N *Δ■													

Additional Notes

- Please call 1-866-REXNORD for availability
- Lubrication fitting tap size: for size code 203, 1/4 in-28 UNF: for all other size codes, 1/8 in PT
- Base to centerline tolerance, +.000 in/-.010 in *(+0.00 mm/-0.25 mm)*
- * N lip seals standard
- ■ Available with H labyrinth seals
- Δ Available with E3 triple lip seals
- Nickel plated housings available, add suffix K75
- For the Selection Guide, Load Ratings and Speed Limits, see the Link-Belt 200 Series Ball Bearing Engineering section on pages 290 - 298.
- Note: Dimensions subject to change. Certified dimensions of ordered material furnished on request.

P3U200

Interchange: *P2BSC, SY-TF, UCP200, NP, YAS*

Photo Shows a 2-Bolt Ball Bearing Pillow Block Unit

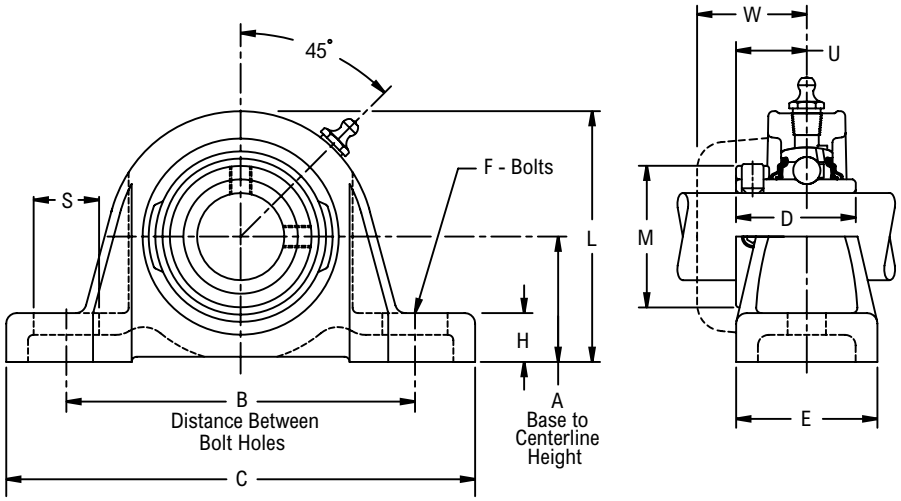

Product Features

- Corrosion-resistant powder coating
- Cast iron housing
- Broad range of sealing options
- Wide inner ring for increased shaft stability
- Spring locking setscrew mount
- Alignable & relubricatable
- See Features and Benefits for additional info on pages 286 - 287.

Bearing Dimensions

Size Code	Shaft Diameter	Part Number	A Base to Centerline Height	B Distance Between Bolt Holes	C	D	E	F Bolts	H	L	M	S	U	W	Approx. Weight
203	1/2	P3U2B08N *■	1 3/16	3 1/2	4 5/8	1 3/32	1 5/16	3/8	1/2	2 11/32	-	3/4	41/64	1 13/64	1.00
	5/8	P3U210N *■													
	11/16	P3U211N *■													
	17.00	*P3U2M17N *■*	*30.16*	*88.90*	*117.50*	*27.78*	*33.33*	*10.00*	*12.70*	*59.50*	*-*	*19.00*	*16.30*	*30.60*	*0.45*
204	3/4	P3U212N *■	1 5/16	3 7/8	5 1/8	1 9/32	1 7/16	3/8	1/2	2 19/32	-	3/4	3/4	1 19/64	1.70
	20.00	*P3U2M20N *■*	*33.34*	*98.40*	*130.20*	*32.54*	*36.51*	*10.00*	*12.70*	*65.90*	*-*	*19.00*	*19.00*	*32.90*	*0.76*
205	7/8	P3U214N *Δ■	1 7/16	4	5 3/8	1 23/64	1 21/64	3/8	9/16	2 7/8	-	3/4	51/64	1 9/32	1.90
	15/16	P3U215N *Δ■													
	1	P3U216N *Δ■													
	25.00	*P3U2M25N *Δ■*	*36.51*	*101.60*	*136.50*	*34.53*	*33.73*	*10.00*	*14.30*	*73.00*	*-*	*19.00*	*20.20*	*32.50*	*0.86*
206	1 1/8	P3U218N *Δ■	1 11/16	4 5/8	6 5/16	1 9/16	1 5/8	1/2	11/16	3 5/16	-	15/16	61/64	1 29/64	2.70
	1 3/16	P3U219N *Δ■													
	1 1/4	P3U2E20N *Δ■													
	30.00	*P3U2M30N *Δ■*	*42.86*	*117.50*	*160.30*	*39.69*	*41.27*	*12.00*	*17.50*	*84.10*	*-*	*23.80*	*24.20*	*36.90*	*1.22*
207	1 1/4	P3U220N Δ*■	1 7/8	4 15/16	6 3/8	1 49/64	1 3/4	1/2	13/16	3 11/16	-	7/8	1 7/64	1 35/64	3.70
	1 3/8	P3U222N Δ*■													
	1 7/16	P3U223N Δ*■													
	35.00	*P3U2M35N Δ*■*	*47.62*	*125.40*	*161.90*	*44.85*	*44.45*	*12.00*	*20.60*	*93.70*	*-*	*22.22*	*28.20*	*39.30*	*1.67*
208	1 1/2	P3U224N Δ*■	2	5 3/8	7 1/16	1 29/32	1 7/8	1/2	13/16	4	-	15/16	1 11/64	1 41/64	4.70
	40.00	*P3U2M40N Δ*■*	*50.80*	*136.50*	*179.40*	*48.42*	*47.60*	*12.00*	*20.60*	*101.60*	*-*	*23.80*	*29.80*	*41.70*	*2.12*
209	1 5/8	P3U226N Δ*■	2 1/8	5 11/16	7 1/4	2 1/32	2	1/2	13/16	4 5/16	-	1	1 15/64	1 21/32	5.40
	1 11/16	P3U227N Δ*■													
	1 3/4	P3U228N Δ*■													
	45.00	*P3U2M45N Δ*■*	*53.98*	*144.46*	*184.20*	*51.59*	*50.80*	*12.00*	*20.60*	*109.50*	*-*	*25.40*	*31.40*	*42.10*	*2.43*
210	1 15/16	P3U231N Δ*■	2 1/4	6 3/16	7 7/8	2 3/32	2 1/8	5/8	7/8	4 1/2	-	15/16	1 17/64	1 25/32	6.10
	2	P3U2E32N Δ*■													
	50.00	*P3U2M50N Δ*■*	*57.15*	*157.20*	*200.00*	*53.18*	*54.00*	*16.00*	*22.20*	*114.30*	*-*	*23.80*	*32.10*	*45.20*	*2.75*
211	2	P3U232N Δ*■	2 1/2	6 29/32	8 7/8	2 1/4	2 5/16	5/8	1	5	-	1 7/32	1 13/32	2 1/64	7.80
	2 3/16	P3U235N Δ*■													
	55.00	*P3U2M55N Δ*■*	*63.50*	*175.41*	*225.42*	*57.15*	*58.73*	*16.00*	*25.40*	*127.00*	*-*	*30.95*	*35.70*	*51.20*	*3.51*
212	2 1/4	P3U236N Δ*■	2 11/16	7 1/2	9 1/2	2 1/2	2 3/8	5/8	1 1/8	5 3/8	-	1 1/8	1 9/16	2 7/64	11.40
	2 3/8	P3U238N Δ*■													
	2 7/16	P3U239N Δ*■													
	60.00	*P3U2M60N Δ*■*	*68.26*	*190.50*	*241.30*	*63.50*	*60.32*	*16.00*	*28.60*	*136.50*	*-*	*28.57*	*39.70*	*53.60*	*5.13*

Continued...

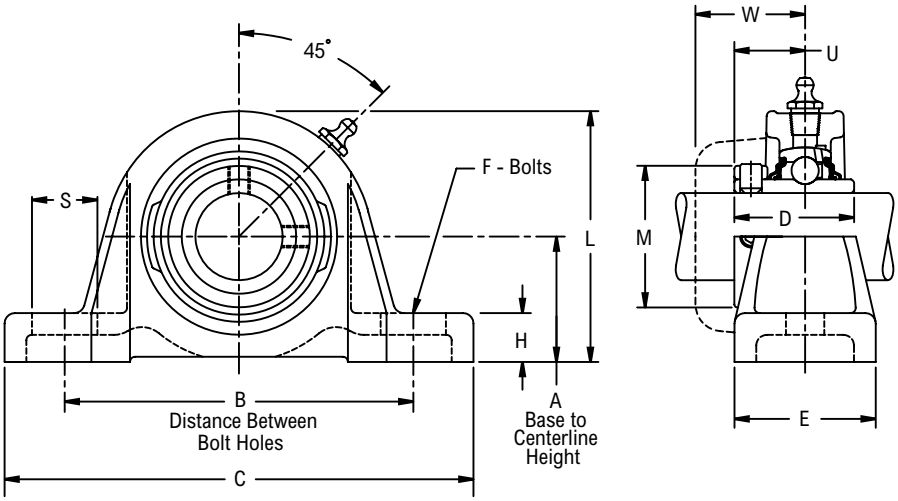

Continued...

Bearing Dimensions

Size Code	Shaft Diameter	Part Number	A Base to Centerline Height	B Distance Between Bolt Holes	C	D	E	F Bolts	H	L	M	S	U	W	Approx. Weight
213	2 1/2	P3U240NΔ*	3	8 1/8	10 1/2	2 11/16	2 7/8	3/4	1 5/16	6	4 3/16	1 3/16	1 11/16	2 1/16	15.90
	2 11/16	P3U243NΔ*													
	65.00	*P3U2M65NΔ**	*76.20*	*206.40*	*266.70*	*68.26*	*73.00*	*20.00*	*33.30*	*152.40*	*106.40*	*30.20*	*42.90*	*52.40*	*7.16*
215	2 3/4	P3U244NΔ*	3 1/4	8 7/8	11 3/4	2 7/8	3 1/4	3/4	1 3/8	6 1/2	4 5/8	1 5/16	1 13/16	2 7/32	19.50
	2 15/16	P3U247NΔ*													
	3	P3U2E48NΔ*													
	75.00	*P3U2M75NΔ**	*82.55*	*225.40*	*298.40*	*73.02*	*82.60*	*20.00*	*34.90*	*165.10*	*117.50*	*33.30*	*46.00*	*56.40*	*8.78*
217	3 7/16	P3U255NΔ*	3 3/4	10	13	3 9/16	3 1/2	7/8	1 5/8	7 7/16	5 3/16	1 5/8	2 1/8	2 1/2	28.70
	3 1/2	P3U2E56NΔ*													
	85.00	*P3U2M85NΔ ***	*95.25*	*254.00*	*330.20*	*90.49*	*88.90*	*24.00*	*41.30*	*188.90*	*131.80*	*41.30*	*54.00*	*63.50*	*12.92*
220	3 15/16	P3U263N*	4 7/16	11 7/8	15 1/4	4 1/4	4 1/4	7/8	1 13/16	8 7/8	5 15/16	1 7/8	2 37/64	3 1/64	50.20
	4	P3U2E64N*													
	100.00	*P3U2M100N**	*112.71*	*301.60*	*387.40*	*107.95*	*108.00*	*24.00*	*46.00*	*225.40*	*150.80*	*47.60*	*65.50*	*76.60*	*22.60*

Additional Notes

Please call 1-866-REXNORD for availability
Lubrication fitting tap size: for size code 203, 1/4 in-28 UNF: for all other size codes, 1/8 in PT
Base to centerline tolerance, +.000 in/-.010 in *(+0.00 mm/-0.25 mm)*
Size codes 203 to 212 don't have mounting collars
* N lip seals standard
■ Available with H labyrinth seals

Δ Available with E3 triple lip seals
Nickel plated housings available in all size codes
For the Selection Guide, Load Ratings and Speed Limits, see the Link-Belt 200 Series Ball Bearing Engineering section on pages 290 - 298.
Note: Dimensions subject to change. Certified dimensions of ordered material furnished on request.

P3W200

Interchange: *P2BSXV, SY-FM, FHP200-G, VPE100, VAS*

Photo Shows a 2-Bolt Ball Bearing Pillow Block Unit

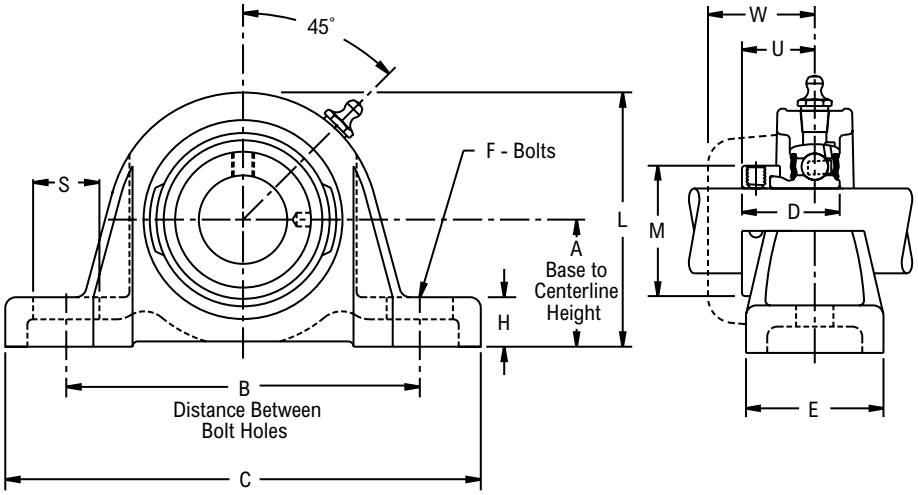

Product Features

- Corrosion-resistant powder coating
- Cast iron housing
- Eccentric cam locking device
- Alignable & relubricatable
- See Features and Benefits for additional info on pages 286 - 287.

Bearing Dimensions

Size Code	Shaft Diameter	Part Number	A Base to Centerline Height	B Distance Between Bolt Holes	C	D	E	F Bolts	H	L	M	S	U	W	Approx. Weight
203	1/2	P3W2B08E ▲	1 3/16	3 1/2	4 5/8	1 1/8	1 5/16	3/8	1/2	2 11/32	1 1/8	3/4	7/8	1 13/64	0.90
	5/8	P3W210E ▲													
204	3/4	P3W212E ▲	1 5/16	3 7/8	5 1/8	1 7/32	1 7/16	3/8	1/2	2 19/32	1 5/16	3/4	59/64	1 19/64	1.60
205	7/8	P3W214E ▲	1 7/16	4	5 3/8	1 7/32	1 21/64	3/8	9/16	2 7/8	1 1/2	3/4	59/64	1 9/32	1.80
	15/16	P3W215E ▲													
	1	P3W216E ▲													
206	1 1/8	P3W218E ▲	1 11/16	4 5/8	6 5/16	1 13/32	1 5/8	1/2	11/16	3 5/16	1 3/4	15/16	1 3/64	1 29/64	2.50
	1 3/16	P3W219E ▲													
	1 1/4	P3W2E20E ▲													
207	1 1/4	P3W220E ▲	1 7/8	4 15/16	6 3/8	1 17/32	1 3/4	1/2	13/16	3 11/16	2 3/16	13/16	1 5/32	1 35/64	3.70
	1 3/8	P3W222E ▲													
	1 7/16	P3W223E ▲													
208	1 1/2	P3W224E ▲	2	5 3/8	7 1/16	1 23/32	1 7/8	1/2	13/16	4	2 3/8	15/16	1 9/32	1 41/64	4.60
209	1 5/8	P3W226E ▲	2 1/8	5 11/16	7 1/4	1 23/32	2	1/2	13/16	4 5/16	2 1/2	1	1 9/32	1 21/32	5.00
	1 11/16	P3W227E ▲													
	1 3/4	P3W228E ▲													
210	1 15/16	P3W231E ▲	2 1/4	6 3/16	7 7/8	1 23/32	2 1/8	5/8	7/8	4 9/16	2 3/4	15/16	1 9/32	1 25/32	5.50
	2	P3W2E32E ▲													

Additional Notes

Please call 1-866-REXNORD for availability

Lubrication fitting tap size: for size code 203, 1/4 in-28 UNF: for all other size codes, 1/8 in PT

Base to centerline tolerance, +.000 in/-.010 in *(+0.00 mm/-0.25 mm)*

▲ E lip seals standard

Nickel plated housings available, add suffix K75

For the Selection Guide, Load Ratings and Speed Limits, see the Link-Belt 200 Series Ball Bearing Engineering section on pages 290 - 298.

Note: Dimensions subject to change. Certified dimensions of ordered material furnished on request.

P3S200

Interchange: *P2BVSC, SY-RM, FHSP200-G, VPS100, SAS*

Photo Shows a 2-Bolt Ball Bearing Pillow Block Unit

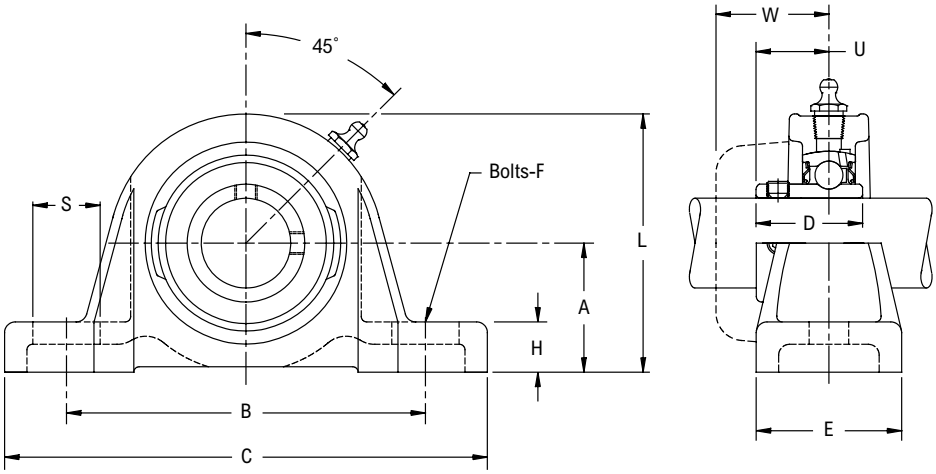

Product Features

- Corrosion-resistant powder coating
- Cast iron housing
- Broad range of sealing options
- Spring locking setscrew mount
- Alignable & relubricatable
- See Features and Benefits for additional info on pages 286 - 287.

Bearing Dimensions

Size Code	Shaft Diameter	Part Number	A Base to Centerline Height	B Distance Between Bolt Holes	C	D	E	F Bolts	H	L	S	U	W	Approx. Weight
203	1/2	P3S2B08E♦● □Δ	1 3/16	3 1/2	4 5/8	63/64	1 5/16	3/8	1/2	2 11/32	3/4	41/64	1 13/64	1.11
	5/8	P3S210E♦● □Δ												1.07
	11/16	P3S211E♦● □Δ												1.05
204	3/4	P3S212E♦● □Δ	1 5/16	3 7/8	5 1/8	1 1/8	1 7/16	3/8	1/2	2 19/32	3/4	3/4	1 19/64	1.51
	20.00	*P3S2M20E♦● □Δ*	*33.32*	*98.40*	*130.20*	*28.58*	*36.52*	*10.00*	*12.70*	*65.90*	*19.00*	*19.00*	*32.90*	*0.70*
205	7/8	P3S214E♦● □Δ	1 7/16	4	5 3/8	1 11/64	1 21/64	3/8	9/16	2 7/8	3/4	51/64	1 9/32	1.81
	15/16	P3S215E♦● □Δ												1.78
	1	P3S216E♦● □Δ												1.75
	25.00	*P3S2M25E♦● □Δ*	*36.52*	*101.60*	*136.50*	*29.77*	*33.73*	*10.00*	*14.30*	*73.00*	*19.00*	*20.20*	*32.50*	*0.80*
206	1 1/8	P3S218E♦● □Δ	1 11/16	4 5/8	6 5/16	1 11/32	1 5/8	1/2	11/16	3 5/16	15/16	61/64	1 29/64	2.45
	1 3/16	P3S219E♦● □Δ												2.42
	1 1/4	P3S2E20E♦● □Δ												2.39
	30.00	*P3S2M30E♦● □Δ*	*42.88*	*117.50*	*160.30*	*34.14*	*41.28*	*12.00*	*17.50*	*84.10*	*23.80*	*24.20*	*36.90*	*1.10*
207	1 1/4	P3S220E♦● □Δ	1 7/8	4 15/16	6 3/8	1 9/16	1 3/4	1/2	13/16	3 11/16	7/8	1 7/64	1 35/64	3.57
	1 3/8	P3S222E♦● □Δ												3.47
	1 7/16	P3S223E♦● □Δ												3.41
	35.00	*P3S2M35E♦● □Δ*	*47.62*	*125.40*	*161.90*	*39.67*	*44.45*	*12.00*	*20.60*	*93.70*	*22.22*	*28.20*	*39.30*	*1.60*
208	1 1/2	P3S224E♦● □Δ	2 1/8	5 3/8	7 1/16	1 21/32	1 7/8	1/2	13/16	4	15/16	1 11/64	1 41/64	4.60
	1 5/8	P3S2E26E♦● □Δ												4.46
	40.00	*P3S2M40E♦● □Δ*	*53.98*	*136.50*	*179.40*	*42.06*	*47.62*	*12.00*	*20.60*	*101.60*	*23.80*	*29.80*	*41.70*	*2.00*
209	1 5/8	P3S226E♦● □Δ	2 1/8	5 11/16	7 1/4	1 49/64	2	1/2	13/16	4 5/16	1	1 15/64	1 21/32	5.28
	1 11/16	P3S227E♦● □Δ												5.21
	1 3/4	P3S228E♦● □Δ												5.14
210	1 7/8	P3S230E♦● □Δ	2 1/4	6 3/16	7 7/8	1 13/16	2 1/8	5/8	7/8	4 9/16	15/16	1 17/64	1 25/32	6.28
	1 15/16	P3S231E♦● □Δ												6.19
	2	P3S2E32E♦● □Δ												6.10
211	2	P3S232E♦● □Δ	2 1/2	6 29/32	8 7/8	1 13/16	2 5/16	5/8	1	5	1 7/32	1 9/32	2 1/64	7.78
	2 3/16	P3S235E♦● □Δ												7.48
	2 1/4	P3S2E36E♦● □Δ												7.38
212	2 1/4	P3S236E♦● □Δ	2 3/4	7 1/2	9 1/2	1 57/64	2 3/8	5/8	1 7/64	5 3/8	1 1/8	1 5/16	2 7/64	10.12
	2 3/8	P3S238E♦● □Δ												9.88
	2 7/16	P3S239E♦● □Δ												9.76
215	2 15/16	P3S247E♦● □Δ	3 1/2	8 7/8	12	2 17/64	2 7/8	7/8	1 7/32	6 21/32	1 5/16	1 15/32	2 7/32	16.73

Additional Notes

- Please call 1-866-REXNORD for availability
- Lubrication fitting tap size: for size codes 203 thru 205, 1/4-28 UNF: for all other size codes, 1/8 in PT
- Base to centerline tolerance, +/- .005 in *(+/- 0.13 mm)*
- Lip seals standard
- ♦ Available with E1 viton seals for all size codes
- ♦ Nickel plated housings available, add suffix K75
- Available with free running style seals, add suffix ● FF, □ HFF or Δ MHFF for all size codes
- For the Selection Guide, Load Ratings and Speed Limits, see the Link-Belt 200 Series Ball Bearing Engineering section on pages 290 - 298.
- Note: Dimensions subject to change. Certified dimensions of ordered material furnished on request.

PH3Y200

Interchange: *P2BSXRU*

Photo Shows a 2-Bolt Ball Bearing Pillow Block Unit

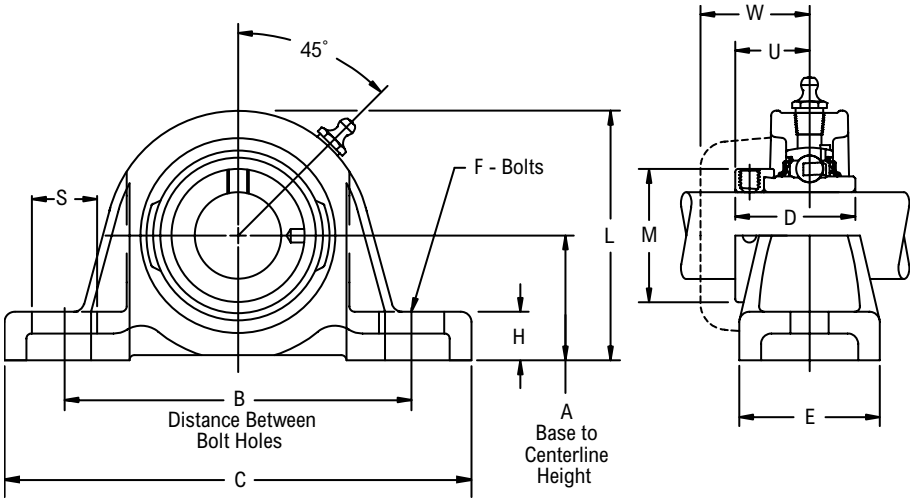

Product Features

- Corrosion-resistant powder coating
- Cast iron housing
- Broad range of sealing options
- Wide inner ring for increased shaft stability
- Eccentric cam locking device
- Alignable & relubricatable
- High base to center height
- See Features and Benefits for additional info on pages 286 - 287.

Bearing Dimensions

Size Code	Shaft Diameter	Part Number	A Base to Centerline Height	B Distance Between Bolt Holes	C	D	E	F Bolts	H	L	M	S	U	W	Approx. Weight
206	1 1/8	PH3Y218N *Δ■	2	5 1/2	7	1 29/32	1 15/16	1/2	11/16	3 5/8	1 3/4	7/8	1 3/16	1 29/64	3.70
	1 3/16	PH3Y219N *Δ■													
	1 1/4	PH3Y2E20N *Δ■													
207	1 1/4	PH3Y220N *Δ■	2 3/8	6 1/4	8 1/4	2 1/64	2 1/2	5/8	3/4	4 1/4	2 3/16	1 1/4	1 9/32	1 35/64	4.70
	1 3/8	PH3Y222N *Δ■													
	1 7/16	PH3Y223N *Δ■													
209	1 5/8	PH3Y226N *Δ■	2 3/8	6 5/8	8 1/4	2 7/32	2 3/8	5/8	3/4	4 9/16	2 1/2	15/16	1 3/8	1 21/32	7.90
	1 11/16	PH3Y227N *Δ■													
	1 3/4	PH3Y228N *Δ■													
210	1 15/16	PH3Y231N *Δ■	2 3/4	8 1/16	10 1/8	2 15/32	2 5/8	5/8	7/8	5	2 3/4	1 1/4	1 1/2	1 25/32	9.50
211	2	PH3Y232N *Δ■	3 1/8	8 7/8	11 3/8	2 13/16	3	5/8	7/8	5 5/8	3	1 1/8	1 23/32	2 1/64	13.20
	2 3/16	PH3Y235N *Δ■													
212	2 1/4	PH3Y236N *Δ■	3 1/8	8 7/8	11 3/8	3 1/16	3	3/4	7/8	5 7/8	3 5/16	1 1/4	1 27/32	2 7/64	14.40
	2 3/8	PH3Y238N *Δ■													
	2 7/16	PH3Y239N *Δ■													

Additional Notes

Please call 1-866-REXNORD for availability
Lubrication fitting tap size, 1/8 in PT
Base to centerline tolerance, +.000 in/-.010 in *(+0.00 mm/-0.25 mm)*
* N lip seals standard
■ Available with H labyrinth seals
Δ Available with E3 triple lip seals

For the Selection Guide, Load Ratings and Speed Limits, see the Link-Belt 200 Series Ball Bearing Engineering section on pages 290 - 298.

Note: Dimensions subject to change. Certified dimensions of ordered material furnished on request.

PH3U200

Interchange: *P2BSCU*

Photo Shows a 2-Bolt Ball Bearing Pillow Block Unit

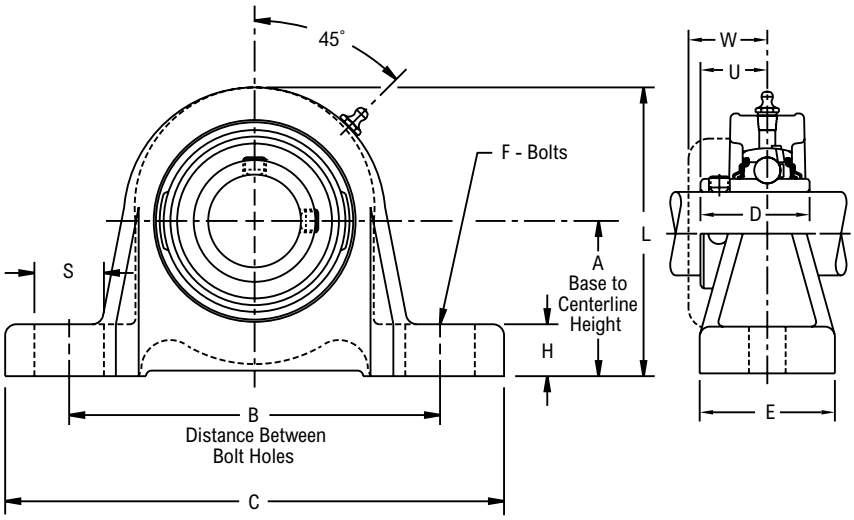

Product Features

- Corrosion-resistant powder coating
- Cast iron housing
- Broad range of sealing options
- Wide inner ring for increased shaft stability
- Spring locking setscrew mount
- Alignable & relubricatable
- High base to center height
- See Features and Benefits for additional info on pages 286 - 287.

Bearing Dimensions

Size Code	Shaft Diameter	Part Number	A Base to Centerline Height	B Distance Between Bolt Holes	C	D	E	F Bolts	H	L	S	U	W	Approx. Weight
206	1 1/8	PH3U218N *Δ■	2	5 1/2	7	1 9/16	1 15/16	1/2	11/16	3 5/8	7/8	61/64	1 29/64	3.80
	1 3/16	PH3U219N *Δ■												
	1 1/4	PH3U2E20N *Δ■												
	30.00	*PH3U2M30N *Δ■*	*50.80*	*139.70*	*177.80*	*39.69*	*49.20*	*12.00*	*17.50*	*92.10*	*22.20*	*24.20*	*36.90*	*1.71*
207	1 1/4	PH3U220N *Δ■	2 3/8	6 1/4	8 1/4	1 49/64	2 1/2	5/8	3/4	4 1/4	1 1/4	1 7/64	1 35/64	4.70
	1 3/8	PH3U222N *Δ■												
	1 7/16	PH3U223N *Δ■												
	35.00	*PH3U2M35N *Δ■*	*60.32*	*158.80*	*209.60*	*44.85*	*63.50*	*16.00*	*19.00*	*108.00*	*31.80*	*28.20*	*39.30*	*2.12*
209	1 5/8	PH3U226N *Δ■	2 3/8	6 5/8	8 1/4	2 1/32	2 3/8	5/8	3/4	4 9/16	15/16	1 15/64	1 21/32	7.90
	1 11/16	PH3U227N *Δ■												
	1 3/4	PH3U228N *Δ■												
	45.00	*PH3U2M45N *Δ■*	*60.32*	*168.30*	*209.60*	*51.59*	*60.30*	*16.00*	*19.00*	*115.90*	*23.80*	*31.40*	*42.10*	*3.56*
210	1 15/16	PH3U231N *Δ■	2 3/4	8 1/16	10 1/8	2 3/32	2 5/8	5/8	7/8	5	1 1/4	1 17/64	1 25/32	9.50
	50.00	*PH3U2M50N *Δ■*	*69.85*	*204.80*	*257.20*	*53.18*	*66.70*	*16.00*	*22.20*	*127.00*	*31.80*	*32.10*	*46.40*	*4.28*
211	2	PH3U232N *Δ■	3 1/8	8 7/8	11 3/8	2 1/4	3	5/8	7/8	5 5/8	1 1/8	1 13/32	2 1/64	13.20
	2 3/16	PH3U235N *Δ■												
	55.00	*PH3U2M55N *Δ■*	*79.38*	*225.40*	*288.90*	*57.15*	*76.20*	*16.00*	*22.20*	*142.90*	*28.60*	*35.70*	*51.20*	*5.94*
212	2 1/4	PH3U236N *Δ■	3 1/8	8 7/8	11 3/8	2 1/2	3	3/4	7/8	5 7/8	1 1/4	1 9/16	2 7/64	14.40
	2 3/8	PH3U238N *Δ■												
	2 7/16	PH3U239N *Δ■												
	60.00	*PH3U2M60N *Δ■*	*79.38*	*225.40*	*288.90*	*63.50*	*76.20*	*20.00*	*22.20*	*149.20*	*31.80*	*39.70*	*53.60*	*6.48*

Additional Notes

Please call 1-866-REXNORD for availability
Lubrication fitting tap size, 1/8 in PT
Base to centerline tolerance, +.000 in/-.010 in *(+0.00 mm/-0.25 mm)*
* N lip seals standard
■ Available with H labyrinth seals
Δ Available with E3 triple lip seals

For the Selection Guide, Load Ratings and Speed Limits, see the Link-Belt 200 Series Ball Bearing Engineering section on pages 290 - 298.

Note: Dimensions subject to change. Certified dimensions of ordered material furnished on request.

PL3Y200

Interchange: *P2BSXRB, SYH-WF, HCLP200, RAK*

Photo Shows a 2-Bolt Ball Bearing Pillow Block Unit

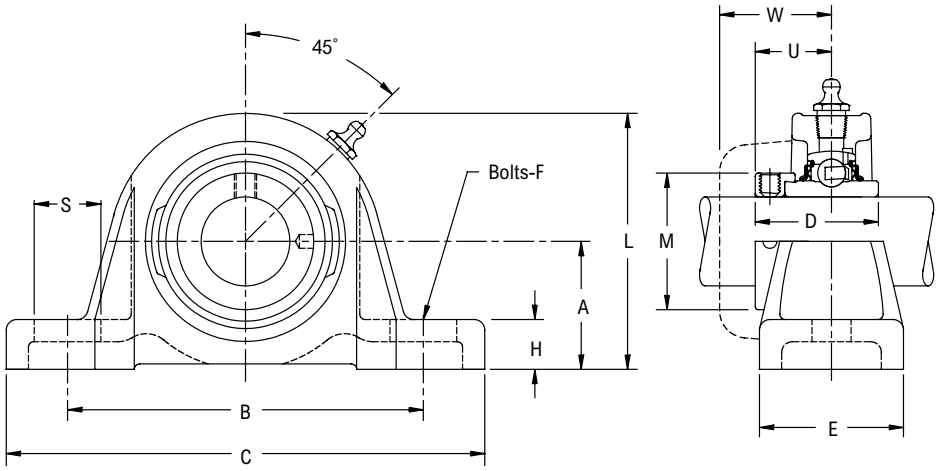

Product Features

- Corrosion-resistant powder coating
- Cast iron housing
- Broad range of sealing options
- Wide inner ring for increased shaft stability
- Eccentric cam locking device
- Alignable & relubricatable
- Low base to center height
- See Features and Benefits for additional info on pages 286 - 287.

Bearing Dimensions

Size Code	Shaft Diameter	Part Number	A Base to Centerline Height	B Distance Between Bolt Holes	C	D	E	F Bolts	H	L	M	S	U	W	Approx. Weight
203	1/2	PL3Y2B08N *■	1 1/16	3 1/2	4 5/8	1 15/32	1 5/16	3/8	3/8	2 7/32	1 1/8	3/4	59/64	1 13/64	1.00
	5/8	PL3Y210N *■													
	11/16	PL3Y211N *■													
204	3/4	PL3Y212N *■	1 1/4	3 7/8	5 1/8	1 23/32	1 7/16	3/8	7/16	2 17/32	1 5/16	3/4	1 3/64	1 19/64	1.70
205	7/8	PL3Y214N *Δ■	1 5/16	4	5 3/8	1 3/4	1 21/64	3/8	7/16	2 3/4	1 1/2	3/4	1 1/16	1 9/32	1.90
	15/16	PL3Y215N *Δ■													
	1	PL3Y216N *Δ■													
206	1 1/8	PL3Y218N *Δ■	1 9/16	4 5/8	6 5/16	1 29/32	1 5/8	1/2	9/16	3 3/16	1 3/4	15/16	1 3/16	1 29/64	2.60
	1 3/16	PL3Y219N *Δ■													
	1 1/4	PL3Y2E20N *Δ■													
207	1 1/4	PL3Y220N *Δ■	1 13/16	4 15/16	6 3/8	2 1/64	1 3/4	1/2	3/4	3 5/8	2 3/16	7/8	1 9/32	1 35/64	3.80
	1 3/8	PL3Y222N *Δ■													
	1 7/16	PL3Y223N *Δ■													
208	1 1/2	PL3Y224N *Δ■	1 15/16	5 3/8	7 1/16	2 7/32	1 7/8	1/2	47/64	3 15/16	2 3/8	15/16	1 3/8	1 41/64	4.80
209	1 5/8	PL3Y226N *Δ■	2 1/16	5 11/16	7 1/4	2 7/32	2	1/2	3/4	4 1/4	2 1/2	1	1 3/8	1 21/32	5.50
	1 11/16	PL3Y227N *Δ■													
	1 3/4	PL3Y228N *Δ■													
210	1 15/16	PL3Y231N *Δ■	2 3/16	6 3/16	7 7/8	2 15/32	2 1/8	5/8	13/16	4 1/2	2 3/4	15/16	1 1/2	1 25/32	6.20
	2	PL3Y2E32N *Δ■													
211	2	PL3Y232N *Δ■	2 7/16	6 29/32	8 7/8	2 13/16	2 5/16	5/8	15/16	4 15/16	3	1 7/32	1 23/32	2 1/64	8.00
	2 3/16	PL3Y235N *Δ■													
212	2 1/4	PL3Y236N *Δ■	2 11/16	7 1/2	9 1/2	3 1/16	2 1/2	5/8	1 1/8	5 3/8	3 5/16	1 1/16	1 27/32	2 7/64	11.60
	2 3/8	PL3Y238N *Δ■													
	2 7/16	PL3Y239N *Δ■													

Additional Notes

Please call 1-866-REXNORD for availability

Lubrication fitting tap size: for size code 203, 1/4 in-28 UNF: for all other size codes, 1/8 in PT

Base to centerline tolerance, +.000 in/-.010 in *(+0.00 mm/-0.25 mm)*

* N lip seals standard

■ Available with H labyrinth seals

Δ Available with E3 triple lip seals

For the Selection Guide, Load Ratings and Speed Limits, see the Link-Belt 200 Series Ball Bearing Engineering section on pages 290 - 298.

Note: Dimensions subject to change. Certified dimensions of ordered material furnished on request.

PL3U200

Interchange: *P2BSCB, SYH-TF, UCLP200, NPL, YAK*

Photo Shows a 2-Bolt Ball Bearing Pillow Block Unit

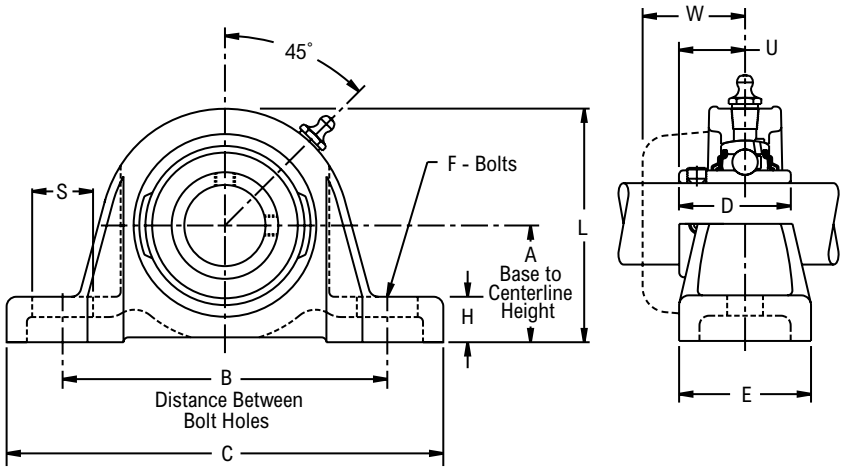

Product Features

- Corrosion-resistant powder coating
- Cast iron housing
- Broad range of sealing options
- Wide inner ring for increased shaft stability
- Spring locking setscrew mount
- Alignable & relubricatable
- Low base to center height
- See Features and Benefits for additional info on pages 286 - 287.

Bearing Dimensions

Size Code	Shaft Diameter	Part Number	A Base to Centerline Height	B Distance Between Bolt Holes	C	D	E	F Bolts	H	L	S	U	W	Approx. Weight
203	1/2	PL3U2B08N *■	1 1/16	3 1/2	4 5/8	1 3/32	1 5/16	3/8	3/8	2 7/32	3/4	41/64	1 13/64	0.90
	5/8	PL3U210N *■												
	11/16	PL3U211N *■												
	17.00	*PL3U2M17N *■*	*26.99*	*88.90*	*117.47*	*27.78*	*33.34*	*10.00*	*9.52*	*56.35*	*19.05*	*16.30*	*30.60*	*0.41*
204	3/4	PL3U212N *■	1 1/4	3 7/8	5 1/8	1 9/32	1 7/16	3/8	7/16	2 17/32	3/4	3/4	1 19/64	1.60
	20.00	*PL3U2M20N *■*	*31.75*	*98.40*	*130.20*	*32.54*	*36.51*	*10.00*	*11.10*	*64.30*	*19.05*	*19.00*	*32.90*	*0.72*
205	7/8	PL3U214N *Δ■	1 5/16	4	5 3/8	1 23/64	1 21/64	3/8	7/16	2 3/4	3/4	51/64	1 9/32	1.80
	15/16	PL3U215N *Δ■												
	1	PL3U216N *Δ■												
	25.00	*PL3U2M25N *Δ■*	*33.34*	*101.60*	*136.52*	*34.53*	*33.73*	*10.00*	*11.11*	*69.85*	*19.05*	*20.20*	*32.50*	*0.81*
206	1 1/8	PL3U218N *Δ■	1 9/16	4 5/8	6 5/16	1 9/16	1 5/8	1/2	9/16	3 3/16	15/16	61/64	1 29/64	2.50
	1 3/16	PL3U219N *Δ■												
	1 1/4	PL3U2E20N *Δ■												
	30.00	*PL3U2M30N *Δ■*	*39.69*	*117.47*	*160.30*	*39.69*	*41.27*	*12.00*	*14.28*	*80.96*	*23.81*	*24.20*	*36.90*	*1.13*
207	1 1/4	PL3U220N *Δ■	1 13/16	4 15/16	6 3/8	1 49/64	1 3/4	1/2	3/4	3 5/8	7/8	1 7/64	1 35/64	3.50
	1 3/8	PL3U222N *Δ■												
	1 7/16	PL3U223N *Δ■												
	35.00	*PL3U2M35N *Δ■*	*46.04*	*125.40*	*161.90*	*44.85*	*44.45*	*12.00*	*19.00*	*92.10*	*22.22*	*28.20*	*39.30*	*1.58*
208	1 1/2	PL3U224N *Δ■	1 15/16	5 3/8	7 1/16	1 29/32	1 7/8	1/2	47/64	3 15/16	15/16	1 11/64	1 41/64	4.50
	40.00	*PL3U2M40N *Δ■*	*49.21*	*136.50*	*179.40*	*48.42*	*47.60*	*12.00*	*18.65*	*100.00*	*23.80*	*29.80*	*41.70*	*2.03*
209	1 5/8	PL3U226N *Δ■	2 1/16	5 11/16	7 1/4	2 1/32	2	1/2	3/4	4 1/4	1	1 15/64	1 21/32	5.20
	1 11/16	PL3U227N *Δ■												
	1 3/4	PL3U228N *Δ■												
	45.00	*PL3U2M45N *Δ■*	*52.39*	*144.46*	*184.20*	*51.59*	*50.80*	*12.00*	*19.00*	*108.00*	*25.40*	*31.40*	*42.10*	*2.34*
210	1 15/16	PL3U231N *Δ■	2 3/16	6 3/16	7 7/8	2 3/32	2 1/8	5/8	13/16	4 1/2	15/16	1 17/64	1 25/32	5.90
	2	PL3U2E32N *Δ■												
	50.00	*PL3U2M50N *Δ■*	*55.56*	*157.20*	*200.00*	*53.18*	*54.00*	*16.00*	*20.60*	*114.30*	*23.80*	*32.10*	*45.20*	*2.66*
211	2	PL3U232N *Δ■	2 7/16	6 29/32	8 7/8	2 1/4	2 5/16	5/8	15/16	4 15/16	1 7/32	1 13/32	2 1/64	7.40
	2 3/16	PL3U235N *Δ■												
	55.00	*PL3U2M55N *Δ■*	*61.91*	*175.41*	*225.42*	*57.15*	*58.73*	*16.00*	*23.80*	*125.40*	*30.95*	*35.70*	*51.20*	*3.33*
212	2 1/4	PL3U236N *Δ■	2 11/16	7 1/2	9 1/2	2 1/2	2 1/2	5/8	1 1/8	5 3/8	1 1/16	1 9/16	2 7/64	11.00
	2 3/8	PL3U238N *Δ■												
	2 7/16	PL3U239N *Δ■												
	60.00	*PL3U2M60N *Δ■*	*68.26*	*190.50*	*241.30*	*63.50*	*63.50*	*16.00*	*28.60*	*136.50*	*27.00*	*39.70*	*53.60*	*4.95*

Additional Notes

Please call 1-866-REXNORD for availability

Lubrication fitting tap size: for size code 203, 1/4 in-28 UNF: for all other size codes, 1/8 in PT

Base to centerline tolerance, +.000 in/-.010 in *(+0.00 mm/-0.25 mm)*

* N lip seals standard

■ Available with H labyrinth seals

Δ Available with E3 triple lip seals

For the Selection Guide, Load Ratings and Speed Limits, see the Link-Belt 200 Series Ball Bearing Engineering section on pages 290 - 298.

Note: Dimensions subject to change. Certified dimensions of ordered material furnished on request.

PL3W200

Interchange: *P2BSXVB, SYH-FM, FHLP200-G, VPLE100, VAK*

Photo Shows a 2-Bolt Ball Bearing Pillow Block Unit

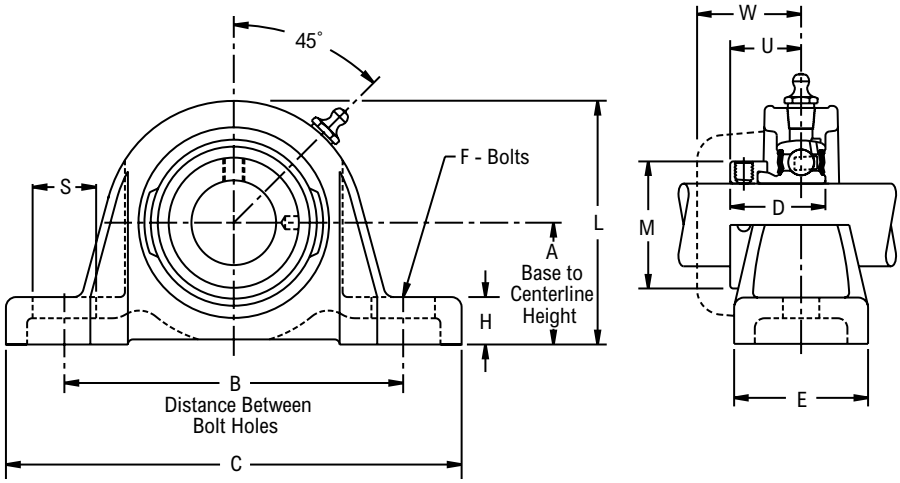

Product Features

- Corrosion-resistant powder coating
- Cast iron housing
- Eccentric cam locking device
- Alignable & relubricatable
- Low base to center height
- See Features and Benefits for additional info on pages 286 - 287.

Bearing Dimensions

Size Code	Shaft Diameter	Part Number	A Base to Centerline Height	B Distance Between Bolt Holes	C	D	E	F Bolts	H	L	M	S	U	W	Approx. Weight
203	1/2	PL3W2B08E ▲	1 1/16	3 1/2	4 5/8	1 1/8	1 5/16	3/8	3/8	2 7/32	1 1/8	3/4	7/8	1 13/64	0.90
	5/8	PL3W210E ▲													
204	3/4	PL3W212E ▲	1 1/4	3 7/8	5 1/8	1 7/32	1 7/16	3/8	7/16	2 17/32	1 5/16	3/4	59/64	1 19/64	1.60
205	7/8	PL3W214E ▲	1 5/16	4	5 3/8	1 7/32	1 21/64	3/8	7/16	2 3/4	1 1/2	3/4	59/64	1 9/32	1.80
	15/16	PL3W215E ▲													
	1	PL3W216E ▲													
206	1 1/8	PL3W218E ▲	1 9/16	4 5/8	6 5/16	1 13/32	1 5/8	1/2	9/16	3 3/16	1 3/4	15/16	1 3/64	1 29/64	2.50
	1 3/16	PL3W219E ▲													
	1 1/4	PL3W2E20E ▲													
207	1 1/4	PL3W220E ▲	1 13/16	4 15/16	6 3/8	1 17/32	1 3/4	1/2	3/4	3 5/8	2 3/16	7/8	1 5/32	1 35/64	3.70
	1 3/8	PL3W222E ▲													
	1 7/16	PL3W223E ▲													
208	1 1/2	PL3W224E ▲	1 15/16	5 3/8	7 1/16	1 23/32	1 7/8	1/2	47/64	3 15/16	2 3/8	15/16	1 9/32	1 41/64	4.60
209	1 5/8	PL3W226E ▲	2 1/16	5 11/16	7 1/4	1 23/32	2	1/2	3/4	4 1/4	2 1/2	1	1 9/32	1 21/32	5.00
	1 11/16	PL3W227E ▲													
	1 3/4	PL3W228E ▲													
210	1 15/16	PL3W231E ▲	2 3/16	6 3/16	7 7/8	1 23/32	2 1/8	5/8	13/16	4 1/2	2 3/4	15/16	1 9/32	1 25/32	5.50
	2	PL3W2E32E ▲													

Additional Notes

Please call 1-866-REXNORD for availability

Lubrication fitting tap size: for size code 203, 1/4 in-28 UNF: for all other size codes, 1/8 in PT

Base to centerline tolerance, +.000 in/-.010 in *(+0.00 mm/-0.25 mm)*

▲ E lip seals standard

For the Selection Guide, Load Ratings and Speed Limits, see the Link-Belt 200 Series Ball Bearing Engineering section on pages 290 - 298.

Note: Dimensions subject to change. Certified dimensions of ordered material furnished on request.

PL3S200

Interchange: *P2BVSCB, SYH-RM, FHSLP200-G, VPL100, SAK*

Photo Shows a 2-Bolt Ball Bearing Pillow Block Unit

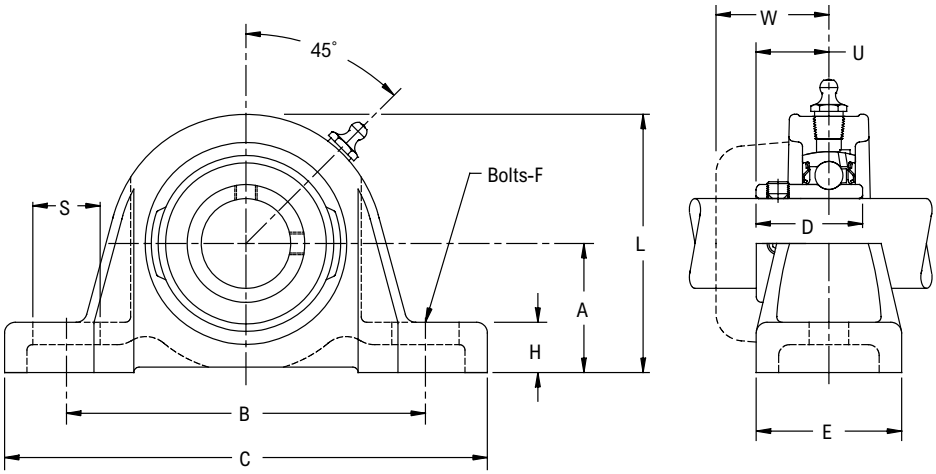

Product Features

- Corrosion-resistant powder coating
- Cast iron housing
- Broad range of sealing options
- Spring locking setscrew mount
- Alignable & relubricatable
- Low base to center height
- See Features and Benefits for additional info on pages 286 - 287.

Bearing Dimensions

Size Code	Shaft Diameter	Part Number	A Base to Centerline Height	B Distance Between Bolt Holes	C	D	E	F Bolts	H	L	S	U	W	Approx. Weight
203	1/2	PL3S2B08E♦● □Δ	1 1/16	3 1/2	4 5/8	63/64	1 5/16	3/8	3/8	2 7/32	3/4	41/64	1 13/64	1.06
	5/8	PL3S210E♦● □Δ												1.02
	11/16	PL3S211E♦● □Δ												1.00
204	3/4	PL3S212E♦● □Δ	1 1/4	3 7/8	5 1/8	1 1/8	1 7/16	3/8	7/16	2 7/32	3/4	3/4	1 19/64	1.44
	20.00	*PL3S2M20E♦● □Δ*	*31.75*	*98.40*	*130.20*	*28.58*	*36.52*	*10.00*	*11.10*	*56.35*	*19.05*	*19.00*	*32.90*	*0.60*
205	7/8	PL3S214E♦● □Δ	1 5/16	4	5 3/8	1 11/64	1 21/64	3/8	7/16	2 3/4	3/4	51/64	1 9/32	1.71
	15/16	PL3S215E♦● □Δ												1.68
	1	PL3S216E♦● □Δ												1.67
	25.00	*PL3S2M25E♦● □Δ*	*33.32*	*101.60*	*136.52*	*29.77*	*33.73*	*10.00*	*11.10*	*69.85*	*19.05*	*20.20*	*32.50*	*0.80*
206	1 1/8	PL3S218E♦● □Δ	1 9/16	4 5/8	6 5/16	1 11/32	1 5/8	1/2	9/16	3 3/16	15/16	61/64	1 29/64	2.27
	1 3/16	PL3S219E♦● □Δ												2.24
	1 1/4	PL3S2E20E♦● □Δ												2.21
	30.00	*PL3S2M30E♦● □Δ*	*39.67*	*117.47*	*160.30*	*34.14*	*41.28*	*12.00*	*14.28*	*80.96*	*23.81*	*24.20*	*36.90*	*1.00*
207	1 1/4	PL3S220E♦● □Δ	1 13/16	4 15/16	6 3/8	1 9/16	1 3/4	1/2	3/4	3 5/8	7/8	1 7/64	1 35/64	3.47
	1 3/8	PL3S222E♦● □Δ												3.37
	1 7/16	PL3S223E♦● □Δ												3.31
	35.00	*PL3S2M35E♦● □Δ*	*46.02*	*125.40*	*161.90*	*39.67*	*44.45*	*12.00*	*19.00*	*92.08*	*22.22*	*28.20*	*39.30*	*1.50*
208	1 1/2	PL3S224E♦● □Δ	1 15/16	5 3/8	7 1/16	1 21/32	1 7/8	1/2	3/4	3 15/16	15/16	1 11/64	1 41/64	4.54
	1 5/8	PL3S2E26E♦● □Δ												4.40
	40.00	*PL3S2M40E♦● □Δ*	*49.22*	*136.50*	*179.40*	*42.06*	*47.62*	*12.00*	*19.00*	*100.02*	*23.80*	*29.80*	*41.70*	*2.00*
209	1 5/8	PL3S226E♦● □Δ	2 1/16	5 11/16	7 1/4	1 49/64	2	1/2	3/4	4 1/4	1	1 15/64	1 21/32	5.22
	1 11/16	PL3S227E♦● □Δ												5.15
	1 3/4	PL3S228E♦● □Δ												5.08
210	1 7/8	PL3S230E♦● □Δ	2 3/16	6 3/16	7 7/8	1 13/16	2 1/8	5/8	13/16	4 1/2	15/16	1 17/64	1 25/32	6.15
	1 15/16	PL3S231E♦● □Δ												6.06
	2	PL3S2E32E♦● □Δ												5.97
211	2	PL3S232E♦● □Δ	2 7/16	6 29/32	8 7/8	1 13/16	2 5/16	5/8	15/16	4 15/16	1 7/32	1 9/32	2 1/64	7.61
	2 3/16	PL3S235E♦● □Δ												7.31
	2 1/4	PL3S2E36E♦● □Δ												7.21
212	2 1/4	PL3S236E♦● □Δ	2 11/16	7 1/2	9 5/8	1 57/64	2 3/8	5/8	1	5 13/32	1 1/16	1 5/16	2 7/64	10.07
	2 3/8	PL3S238E♦● □Δ												9.83
	2 7/16	PL3S239E♦● □Δ												9.71
215	2 15/16	PL3S247E♦● □Δ	3 5/16	9 1/8	12	2 17/64	2 7/8	7/8	1 1/32	6 15/32	1 7/8	1 15/32	2 7/32	16.23

Additional Notes

- Please call 1-866-REXNORD for availability
- Lubrication fitting tap size: for size codes 203 thru 205, 1/4-28 UNF: for all other size codes, 1/8 in PT
- Base to centerline tolerance, +/- .005 in*(+/- 0.13 mm)*
- Lip seals standard
- ♦ Available with E1 viton seals for all size codes
- Available with free running style seals, add suffix ● FF, □ HFF or Δ MHFF for all size codes
- For the Selection Guide, Load Ratings and Speed Limits, see the Link-Belt 200 Series Ball Bearing Engineering section on pages 290 - 298.
- Note: Dimensions subject to change. Certified dimensions of ordered material furnished on request.

PT3CL200N

Interchange: *TBDL, TB-T*

Photo Shows a 2-Bolt Ball Bearing Tapped Base Pillow Block

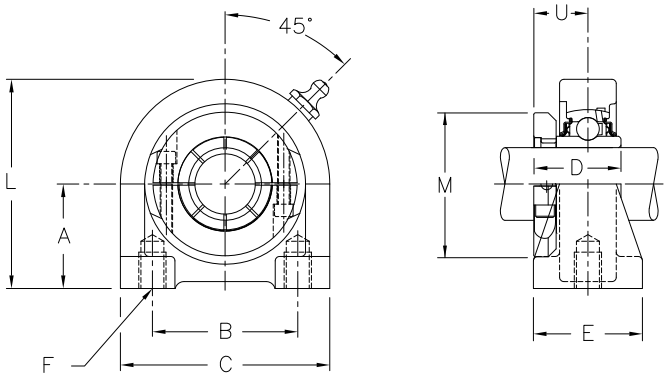

Product Features

Corrosion-resistant powder coating
Cast iron tapped base housing
Broad range of sealing options
Wide inner ring for increased shaft stability
Spring locking setscrew mount
Alignable & relubricatable
See Features and Benefits for additional info on pages 286 - 287.

Bearing Dimensions

Size Code	Shaft Diameter	Part Number	A Base to Centerline Height	B Distance Between Bolt Holes	C	D	E	F Depth	F Tap	L	M	U	Approx. Weight
204	3/4	PT3CL212N *■	1 5/16	2	2 7/8	1 11/32	1 1/2	1/2	3/8-16	2 19/32	1 15/16	13/16	1.20
205	7/8	PT3CL214N *Δ■	1 7/16	2	2 7/8	1 3/8	1 1/2	1/2	3/8-16	2 7/8	2 5/64	57/64	1.40
	15/16	PT3CL215N *Δ■											
	1	PT3CL216N *Δ■											
206	1 1/8	PT3CL218N *Δ■	1 11/16	3	4	1 9/16	1 1/2	5/8	7/16-14	3 5/16	2 15/32	29/32	2.50
	1 3/16	PT3CL219N *Δ■											
	1 1/4	PT3CL2E20N *Δ■											
207	1 1/4	PT3CL220N *Δ■	1 7/8	3 1/4	4 13/32	1 3/4	2	3/4	1/2-13	3 11/16	2 7/8	1 1/32	3.40
	1 3/8	PT3CL222N *Δ■											
	1 7/16	PT3CL223N *Δ■											
208	1 1/2	PT3CL224N *Δ■	1 15/16	3 1/2	4 5/8	1 15/16	1 7/8	3/4	1/2-13	3 15/16	3 3/64	1 11/64	3.67
	1 5/8	PT3CL2E26N *Δ■											3.53
209	1 11/16	PT3CL227N *Δ■	2 1/8	3 3/4	5	1 61/64	2	7/8	1/2-13	4 1/4	3 17/64	1 7/32	4.90
	1 3/4	PT3CL228N *Δ■											
210	1 15/16	PT3CL231N *Δ■	2 1/4	4	5 7/16	2 5/64	2	7/8	5/8-11	4 1/2	3 5/8	1 21/64	5.60
	2	PT3CL2E32N *Δ■											

Additional Notes

Please call 1-866-REXNORD for availability
Lubrication fitting tap size, 1/8 in PT
Base to centerline tolerance, +.000 in/-.010 in *(+0.00 mm/-0.25 mm)*
* N lip seals standard
■ Available with H labyrinth seals
Δ Available with E3 triple lip seals

For the Selection Guide, Load Ratings and Speed Limits, see the Link-Belt 200 Series Ball Bearing Engineering section on pages 290 - 298.

Note: Dimensions subject to change. Certified dimensions of ordered material furnished on request.

PT3U200

Interchange: *TBSC, UCPAS200, TB, YTB*

Photo Shows a 2-Bolt Ball Bearing Tapped Base Pillow Block

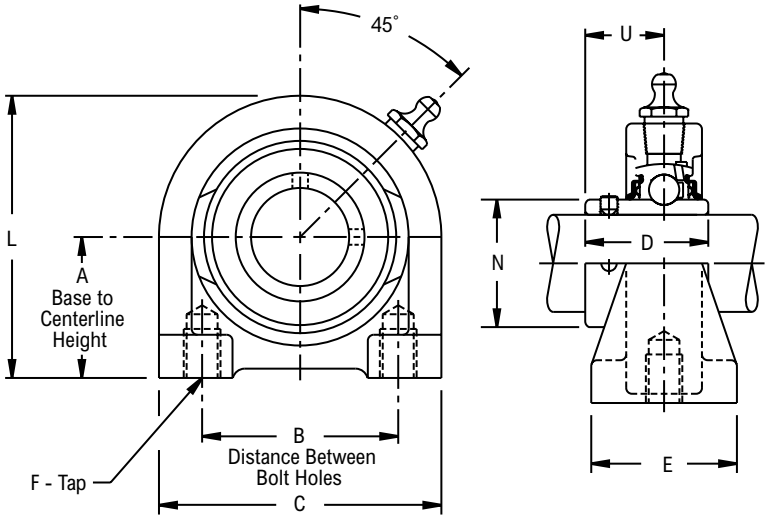

Product Features

- Corrosion-resistant powder coating
- Cast iron tapped base housing
- Broad range of sealing options
- Wide inner ring for increased shaft stability
- Spring locking setscrew mount
- Alignable & relubricatable
- See Features and Benefits for additional info on pages 286 - 287.

Bearing Dimensions

Size Code	Shaft Diameter	Part Number	A Base to Centerline Height	B Distance Between Bolt Holes	C	D	E	F Depth	F Tap	L	N	U	Approx. Weight
204	3/4	PT3U212N *■	1 5/16	2	2 7/8	1 9/32	1 1/2	1/2	3/8-16	2 19/32	1 1/8	3/4	1.20
205	7/8	PT3U214N *Δ■	1 7/16	2	2 7/8	1 23/64	1 1/2	1/2	3/8-16	2 7/8	1 5/16	51/64	1.40
	15/16	PT3U215N *Δ■											
	1	PT3U216N *Δ■											
206	1 1/8	PT3U218N *Δ■	1 11/16	3	4	1 9/16	1 1/2	5/8	7/16-14	3 5/16	1 19/32	61/64	2.50
	1 3/16	PT3U219N *Δ■											
	1 1/4	PT3U2E20N *Δ■											
207	1 1/4	PT3U220N *Δ■	1 7/8	3 1/4	4 13/32	1 49/64	2	3/4	1/2-13	3 11/16	1 27/32	1 7/64	3.40
	1 3/8	PT3U222N *Δ■											
	1 7/16	PT3U223N *Δ■											
208	1 1/2	PT3U224N *Δ■	1 15/16	3 1/2	4 5/8	1 29/32	1 7/8	3/4	1/2-13	3 15/16	2 3/32	1 11/64	3.67
209	1 11/16	PT3U227N *Δ■	2 1/8	3 3/4	5	2 1/32	2	7/8	1/2-13	4 1/4	2 9/32	1 15/64	4.90
	1 3/4	PT3U228N *Δ■											
210	1 15/16	PT3U231N *Δ■	2 1/4	4	5 7/16	2 3/32	2	7/8	5/8-11	4 1/2	2 15/32	1 17/64	5.60
	2	PT3U2E32N *Δ■											

Additional Notes

Please call 1-866-REXNORD for availability
Lubrication fitting tap size, 1/8 in PT
Base to centerline tolerance, +.000 in/-.010 in *(+0.00 mm/-0.25 mm)*
* N lip seals standard
■ Available with H labyrinth seals
Δ Available with E3 triple lip seals

For the Selection Guide, Load Ratings and Speed Limits, see the Link-Belt 200 Series Ball Bearing Engineering section on pages 290 - 298.

Note: Dimensions subject to change. Certified dimensions of ordered material furnished on request.

PT3S200

Interchange: *TBVSC, STB*

Photo Shows a 2-Bolt Ball Bearing Tapped Base Pillow Block

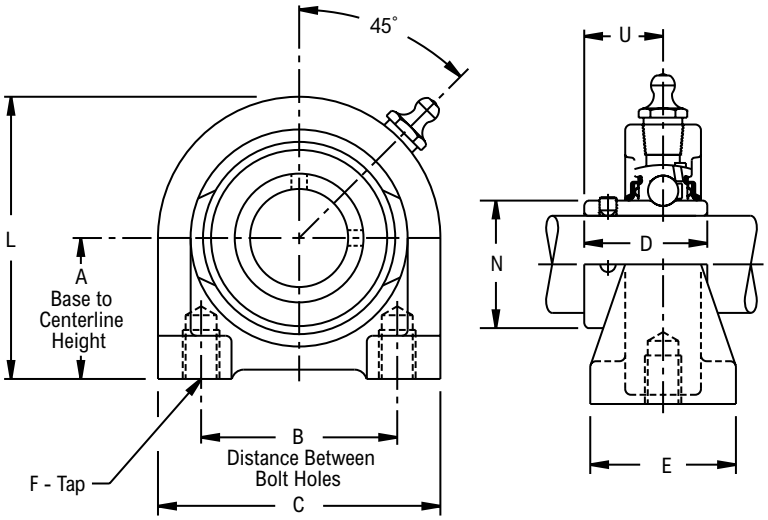

Product Features

Corrosion-resistant powder coating
Cast iron tapped base housing
Broad range of sealing options
Spring locking setscrew mount
Alignable & relubricatable
See Features and Benefits for additional info on pages 286 - 287.

Bearing Dimensions

Size Code	Shaft Diameter	Part Number	A Base to Centerline Height	B Distance Between Bolt Holes	F Depth	F Tap	C	D	E	L	U	Approx. Weight
203	1/2	PT3S2B08E♦● □Δ	1 5/16	2	1/2	3/8-16	2 7/8	63/64	1 5/16	2 13/32	41/64	1.06
	5/8	PT3S210E♦● □Δ										1.02
	11/16	PT3S211E♦● □Δ										1.00
204	3/4	PT3S212E♦● □Δ	1 5/16	2	1/2	3/8-16	2 7/8	1 1/8	1 1/2	2 19/32	3/4	1.20
	20.00	*PT3S2M20E♦● □Δ*	*33.32*	*50.80*	*12.70*	*3/8-16*	*73.00*	*28.58*	*38.10*	*65.90*	*19.00*	*0.50*
205	7/8	PT3S214E♦● □Δ	1 7/16	2	1/2	3/8-16	2 7/8	1 11/64	1 1/2	2 7/8	51/64	1.40
	15/16	PT3S215E♦● □Δ										1.37
	1	PT3S216E♦● □Δ										1.34
	25.00	*PT3S2M25E♦● □Δ*	*36.52*	*50.80*	*12.70*	*3/8-16*	*73.02*	*29.77*	*38.10*	*73.02*	*20.20*	*0.60*
206	1 1/8	PT3S218E♦● □Δ	1 11/16	3	5/8	7/16-14	4	1 11/32	1 1/2	3 5/16	61/64	2.35
	1 3/16	PT3S219E♦● □Δ										2.32
	1 1/4	PT3S2E20E♦● □Δ										2.29
	30.00	*PT3S2M30E♦● □Δ*	*42.88*	*76.20*	*15.90*	*7/16-14*	*101.60*	*34.14*	*38.10*	*84.10*	*24.20*	*1.00*
207	1 1/4	PT3S220E♦● □Δ	1 7/8	3 1/4	3/4	1/2-13	4 13/32	1 9/16	2	3 11/16	1 7/64	3.13
	1 3/8	PT3S222E♦● □Δ										3.03
	1 7/16	PT3S223E♦● □Δ										2.97
	35.00	*PT3S2M35E♦● □Δ*	*47.62*	*82.55*	*19.00*	*1/2-13*	*111.90*	*39.67*	*50.80*	*93.70*	*28.20*	*1.40*
208	1 1/2	PT3S224E♦● □Δ	1 15/16	3 1/2	3/4	1/2-13	4 5/8	1 21/32	1 7/8	3 15/16	1 11/64	3.67
	1 5/8	PT3S2E26E♦● □Δ										3.53
	40.00	*PT3S2M40E♦● □Δ*	*49.22*	*88.90*	*19.00*	*1/2-13*	*117.50*	*42.06*	*47.62*	*100.00*	*29.80*	*1.60*
209	1 5/8	PT3S226E♦● □Δ	2 1/8	3 3/4	7/8	1/2-13	5	1 49/64	2	4 1/4	1 15/64	4.75
	1 11/16	PT3S227E♦● □Δ										4.68
	1 3/4	PT3S228E♦● □Δ										4.61
210	1 7/8	PT3S230E♦● □Δ	2 1/4	4	7/8	5/8-11	5 7/16	1 13/16	2	4 1/2	1 17/64	5.66
	1 15/16	PT3S231E♦● □Δ										5.57
	2	PT3S2E32E♦● □Δ										5.48

Additional Notes

Please call 1-866-REXNORD for availability
Lubrication fitting tap, 1/8 in PT
Base to centerline tolerance, +/- .005 in *(+/- 0.13 mm)*
Lip seals standard
♦ Available with E1 viton seals
Available with free running style seals, add suffix ● FF, □ HFF or Δ MHFF

For the Selection Guide, Load Ratings and Speed Limits, see the Link-Belt 200 Series Ball Bearing Engineering section on pages 290 - 298.

Note: Dimensions subject to change. Certified dimensions of ordered material furnished on request.

PSY200

Photo Shows a 2-Bolt Ball Bearing Pillow Block Unit with Stamped Steel Housing

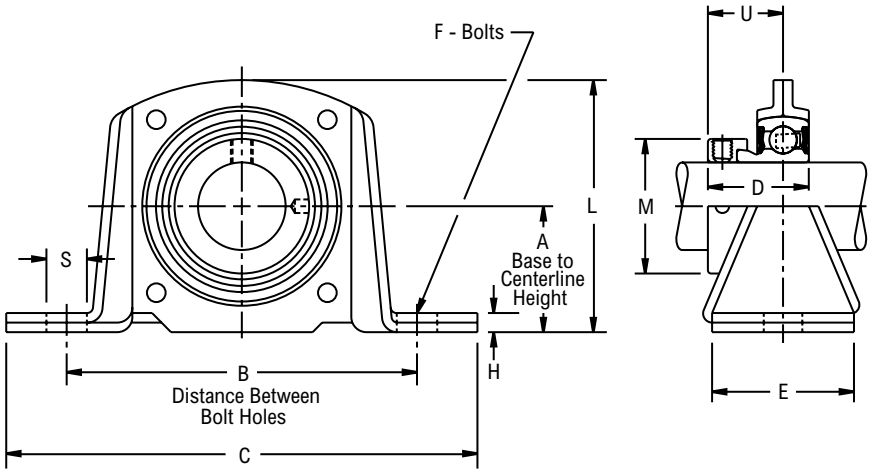

Product Features

- Formed steel housing
- Broad range of sealing options
- Wide inner ring for increased shaft stability
- Eccentric cam locking device
- Alignable & non-relubricatable
- See Features and Benefits for additional info on pages 286 - 287.

Bearing Dimensions

Size Code	Shaft Diameter	Part Number	Radial Load Rating	A Base to Centerline Height	B Distance Between Bolt Holes	C	D	E	F Bolts	H	L	M	S	U	Approx. Weight
203	1/2	PSY2B08N *■	600	1 3/16	3 1/2	4 5/8	1 15/32	1 1/16	3/8	7/32	2 11/32	1 1/8	33/64	59/64	0.90
	5/8	PSY210N *■													
	11/16	PSY211N *■													
204	3/4	PSY212N *■	700	1 5/16	3 7/8	5 1/8	1 23/32	1 1/8	3/8	7/32	2 5/8	1 5/16	9/16	1 3/64	1.10
205	7/8	PSY214N *Δ■	800	1 7/16	4 1/16	5 3/8	1 3/4	1 7/32	3/8	7/32	2 55/64	1 1/2	1/2	1 1/16	1.30
	15/16	PSY215N *Δ■													
	1	PSY216N *Δ■													
206	1 1/8	PSY218N *Δ■	985	1 11/16	4 49/64	6 5/16	1 29/32	1 7/16	1/2	5/16	3 5/16	1 3/4	49/64	1 3/16	2.00
	1 3/16	PSY219N *Δ■													
	1 1/4	PSY2E20N *Δ■													
207	1 1/4	PSY220N *Δ■	1,300	1 7/8	5 5/64	6 15/16	2 1/64	1 5/8	1/2	5/16	3 3/4	2 3/16	49/64	1 9/32	2.70
	1 3/8	PSY222N *Δ■													
	1 7/16	PSY223N *Δ■													

Additional Notes

Please call 1-866-REXNORD for availability

* N lip seals standard

■ Available with H labyrinth seals

Δ Available with E3 triple lip seals

For the Selection Guide, Load Ratings and Speed Limits, see the Link-Belt 200 Series Ball Bearing Engineering section on pages 290 - 298.

Note: Dimensions subject to change. Certified dimensions of ordered material furnished on request.

PSU200

Photo Shows a 2-Bolt Ball Bearing Pillow Block Unit with Stamped Steel Housing

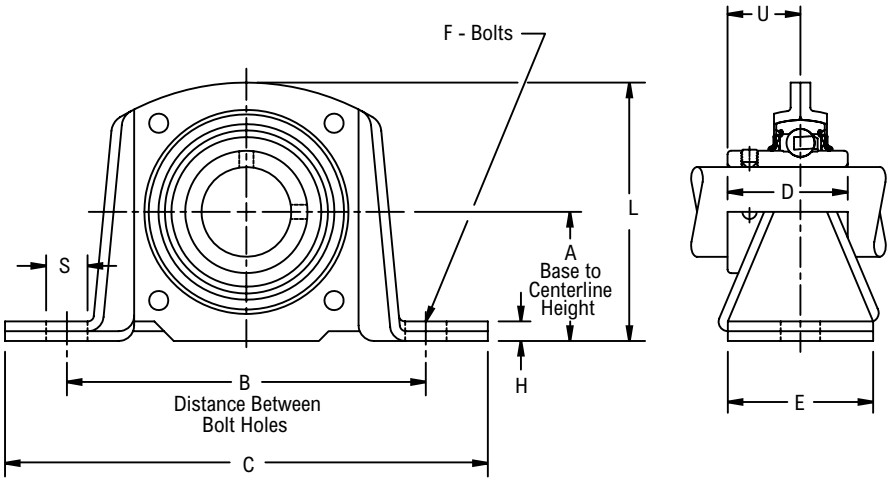

Product Features

- Formed steel housing
- Broad range of sealing options
- Wide inner ring for increased shaft stability
- Spring locking setscrew mount
- Alignable & non-relubricatable
- See Features and Benefits for additional info on pages 286 - 287.

Bearing Dimensions

Size Code	Shaft Diameter	Part Number	Radial Load Rating	A Base to Centerline Height	B Distance Between Bolt Holes	C	D	E	F Bolts	H	L	S	U	Approx. Weight
203	1/2	PSU2B08N *■	600	1 3/16	3 1/2	4 5/8	1 3/32	1 1/16	3/8	7/32	2 11/32	33/64	41/64	0.90
	5/8	PSU210N *■												
	11/16	PSU211N *■												
204	3/4	PSU212N *■	700	1 5/16	3 7/8	5 1/8	1 9/32	1 1/8	3/8	7/32	2 5/8	9/16	3/4	1.10
205	7/8	PSU214N *Δ■	800	1 7/16	4 1/16	5 3/8	1 23/64	1 7/32	3/8	7/32	2 55/64	1/2	51/64	1.30
	15/16	PSU215N *Δ■												
	1	PSU216N *Δ■												
206	1 1/8	PSU218N *Δ■	985	1 11/16	4 49/64	6 5/16	1 9/16	1 7/16	1/2	5/16	3 5/16	49/64	61/64	2.00
	1 3/16	PSU219N *Δ■												
	1 1/4	PSU2E20N *Δ■												
207	1 1/4	PSU220N *Δ■	1,300	1 7/8	5 5/64	6 15/16	1 49/64	1 5/8	1/2	5/16	3 3/4	49/64	1 7/64	2.70
	1 3/8	PSU222N *Δ■												
	1 7/16	PSU223N *Δ■												

Additional Notes

Please call 1-866-REXNORD for availability

* N lip seals standard

■ Available with H labyrinth seals

Δ Available with E3 triple lip seals

For the Selection Guide, Load Ratings and Speed Limits, see the Link-Belt 200 Series Ball Bearing Engineering section on pages 290 - 298.

Note: Dimensions subject to change. Certified dimensions of ordered material furnished on request.

PSW200

Photo Shows a 2-Bolt Ball Bearing Pillow Block Unit with Stamped Steel Housing

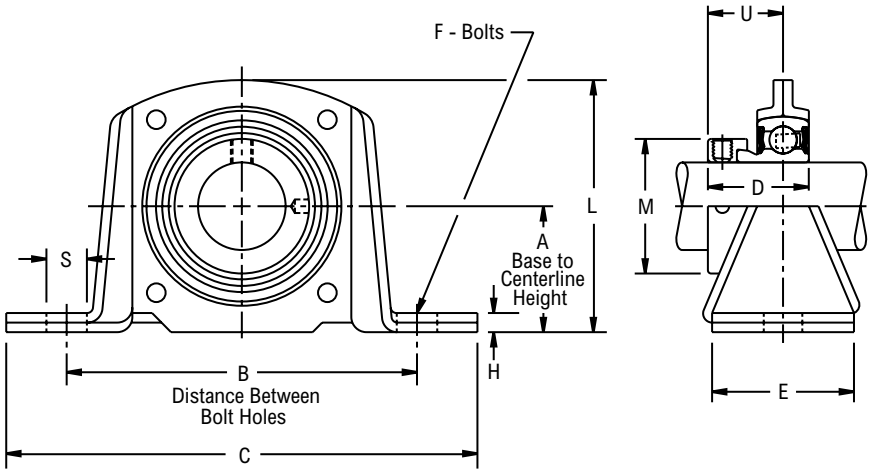

Product Features

Formed steel housing
Eccentric cam locking device
Alignable & non-relubricatable
See Features and Benefits for additional info on pages 286 - 287.

Bearing Dimensions

Size Code	Shaft Diameter	Part Number	Radial Load Rating	A Base to Centerline Height	B Distance Between Bolt Holes	C	D	E	F Bolts	H	L	M	S	U	Approx. Weight
203	1/2	PSW2B08E ▲	600	1 3/16	3 1/2	4 5/8	1 1/8	1 1/16	3/8	7/32	2 11/32	1 1/8	33/64	7/8	0.70
	5/8	PSW210E ▲													
204	3/4	PSW212E ▲	700	1 5/16	3 7/8	5 1/8	1 7/32	1 1/8	3/8	7/32	2 5/8	1 5/16	9/16	59/64	0.90
205	7/8	PSW214E ▲	800	1 7/16	4 1/16	5 3/8	1 7/32	1 7/32	3/8	7/32	2 55/64	1 1/2	1/2	59/64	1.10
	15/16	PSW215E ▲													
	1	PSW216E ▲													
206	1 1/8	PSW218E ▲	985	1 11/16	4 49/64	6 5/16	1 13/32	1 7/16	1/2	5/16	3 5/16	1 3/4	49/64	1 3/64	1.70
	1 3/16	PSW219E ▲													
	1 1/4	PSW2E20E ▲													
207	1 1/4	PSW220E ▲	1,300	1 7/8	5 5/64	6 15/16	1 17/32	1 5/8	1/2	5/16	3 3/4	2 3/16	49/64	1 5/32	2.40
	1 3/8	PSW222E ▲													
	1 7/16	PSW223E ▲													

Additional Notes

Please call 1-866-REXNORD for availability
▲ E lip seals standard
For the Selection Guide, Load Ratings and Speed Limits, see the Link-Belt 200 Series Ball Bearing Engineering section on pages 290 - 298.
Note: Dimensions subject to change. Certified dimensions of ordered material furnished on request.

PSS200

Photo Shows a 2-Bolt Ball Bearing Pillow Block Unit with Stamped Steel Housing

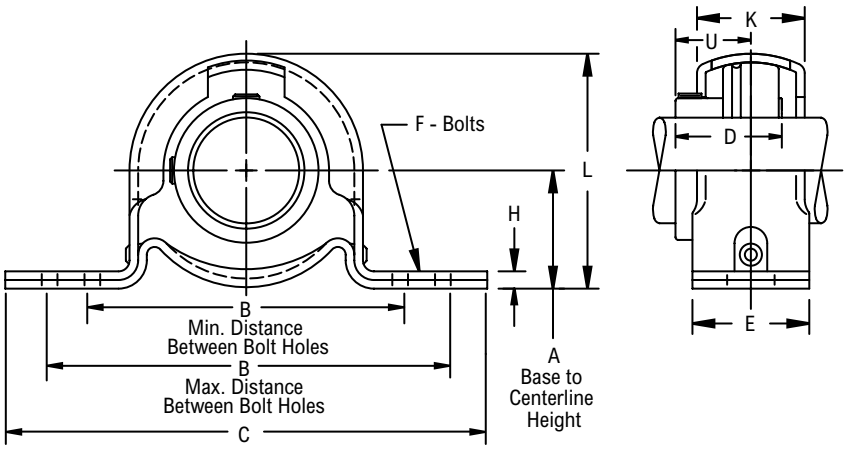

Product Features

- Formed steel housing
- Broad range of sealing options
- Spring locking setscrew mount
- Alignable & non-relubricatable
- See Features and Benefits for additional info on pages 286 - 287.

Bearing Dimensions

Size Code	Shaft Diameter	Part Number	A Base to Centerline Height	B Distance Between Bolt Holes Min	B Distance Between Bolt Holes Max	C	D	E	F Bolts	H	K	L	U	Radial Load Rating	Approx. Weight
203	1/2	PSS2B08E♦● □Δ	7/8	2 1/2	2 7/8	3 5/8	63/64	1	5/16	3/4	13/16	1 3/4	41/64	300	0.50
	5/8	PSS210E♦● □Δ													0.46
	11/16	PSS211E♦● □Δ													0.44
204	3/4	PSS212E♦● □Δ	1	2 7/8	3 1/8	4 1/8	1 1/8	1	3/8	7/8	59/64	2 1/16	23/32	350	0.63
	20.00	*PSS2M20E♦● □Δ*	*25.40*	*73.00*	*79.40*	*104.80*	*28.58*	*25.40*	*10.00*	*22.20*	*23.42*	*52.40*	*18.30*	*1,560*	*0.30*
205	7/8	PSS214E♦● □Δ	1 1/8	3 3/16	3 9/16	4 1/2	1 11/64	1 1/8	3/8	3/4	1 1/16	2 7/32	3/4	400	0.81
	15/16	PSS215E♦● □Δ													0.78
	1	PSS216E♦● □Δ													0.75
	25.00	*PSS2M25E♦● □Δ*	*28.58*	*81.00*	*90.50*	*114.30*	*29.77*	*28.60*	*10.00*	*19.00*	*27.00*	*56.40*	*19.00*	*1,780*	*0.30*
206	1 1/8	PSS218E♦● □Δ	1 5/16	3 9/16	3 15/16	4 7/8	1 11/32	1 1/8	3/8	7/8	1 3/16	2 5/8	7/8	600	1.19
	1 3/16	PSS219E♦● □Δ													1.14
	1 1/4	PSS2E20E♦● □Δ													1.11
	30.00	*PSS2M30E♦● □Δ*	*33.32*	*90.50*	*100.00*	*123.80*	*34.14*	*28.60*	*10.00*	*22.20*	*30.16*	*66.70*	*22.20*	*2,670*	*0.50*
207	1 1/4	PSS220E♦● □Δ	1 9/16	3 15/16	4 7/16	5 3/4	1 9/16	1 1/4	1/2	1	1 3/16	3 1/8	1	800	1.65
	1 3/8	PSS222E♦● □Δ													1.55
	1 7/16	PSS223E♦● □Δ													1.50

Additional Notes

- Please call 1-866-REXNORD for availability
- Lubrication fitting tap size: for size codes 203 thru 205, 1/4-28 UNF: for all other size codes, 1/8 in PT
- Base to centerline tolerance, +/- .005 in*(+/- 0.13 mm)*
- Lip seals standard
- ♦ Available with E1 viton seals
- Available with free running style seals, add suffix ● FF, □ HFF or Δ MHFF
- For the Selection Guide, Load Ratings and Speed Limits, see the Link-Belt 200 Series Ball Bearing Engineering section on pages 290 - 298.
- Note: Dimensions subject to change. Certified dimensions of ordered material furnished on request.

PPCL200

Interchange: *F&BDL*

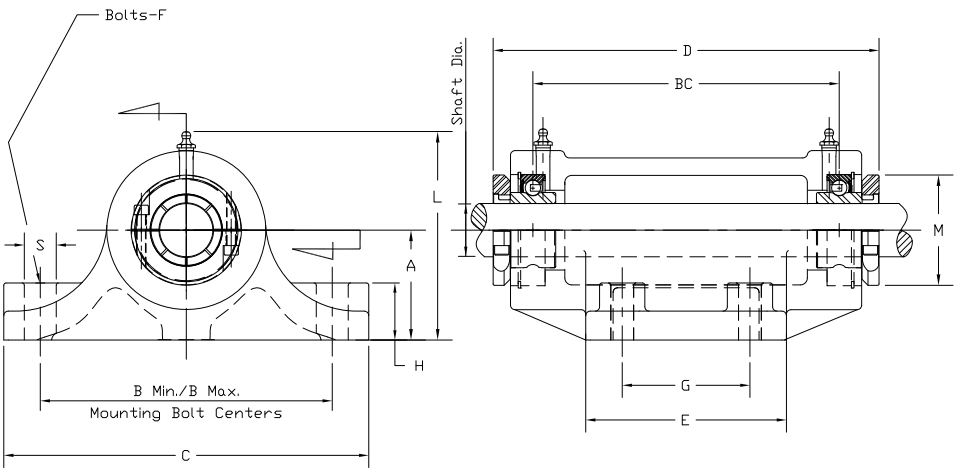

Product Features

- Corrosion-resistant powder coating
- Cast iron housing
- Broad range of sealing options
- Wide inner ring for increased shaft stability
- Centrik-Lok CL shaft locking device
- Fan and Blower Interchange
- See Features and Benefits for additional info on pages 286 - 287.

Bearing Dimensions

Size Code	Shaft Diameter	Part Number	A Base to Centerline Height	B Distance Between Bolt Holes Min	B Distance Between Bolt Holes Max	BC	C	D	E	F	G	H	L	M	S	Approx. Weight
205	15/16	PPCL215N*■Δ	2 1/2	6 1/16	6 7/16	6 17/64	7 3/4	8	4 1/4	3/8	2 3/4	7/8	4 5/8	2 13/64	5/8	16
206	1 3/16	PPCL219N*■Δ	2 1/2	6 1/16	6 7/16	6 3/32	7 3/4	7 7/8	4 1/4	3/8	2 3/4	7/8	4 5/8	2 19/32	5/8	16
207	1 7/16	PPCL223N*■Δ	3	7 3/4	8 1/4	8 21/32	10	10 11/16	5 1/2	1/2	3 1/2	1	5 11/16	3 3/64	7/8	36
209	1 11/16	PPCL227N*■Δ	3	7 3/4	8 1/4	8 33/64	10	10 59/64	5 1/2	1/2	3 1/2	1	5 11/16	3 3/8	7/8	36
210	1 15/16	PPCL231N*■Δ	3 1/2	9 1/8	9 7/8	11 11/32	12	13 61/64	7	5/8	4 1/2	1 1/4	6 25/64	3 3/4	1 1/8	60
211	2 3/16	PPCL235N*■Δ	3 1/2	9 1/8	9 7/8	11 11/32	12	14	7	5/8	4 1/2	1 1/4	6 25/64	4 5/64	1 1/8	60
212	2 7/16	PPCL239N*■Δ	3 1/2	9 1/8	9 7/8	11 3/8	12	14 35/64	7	5/8	4 1/2	1 1/4	6 19/32	4 9/32	1 1/8	65

Additional Notes

Please call 1-866-REXNORD for availability

Lubrication fitting tap size: 1/8 in PT

Base to centerline tolerance, +.000 in/-.010 in

Insert bearing part numbers CLB200XNL, where 00 should be replaced by the shaft size in the part number

* N lip seals standard

■ Available with H labyrinth seals

Δ Available with E3 triple lip seals

For the Selection Guide, Load Ratings and Speed Limits, see the Link-Belt 200 Series Ball Bearing Engineering section on pages 290 - 298.

Note: Dimensions subject to change. Certified dimensions of ordered material furnished on request.

PPU200

Interchange: *F&BCC, DRNR*

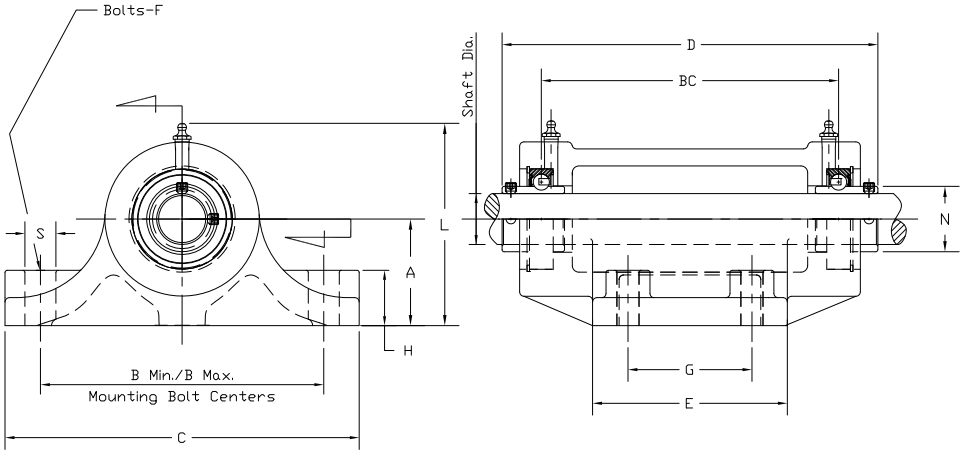

Product Features

Corrosion-resistant powder coating
Cast iron housing
Broad range of sealing options
Wide inner ring for increased shaft stability
Spring locking setscrew mount
Fan and Blower Interchange
See Features and Benefits for additional info on pages 286 - 287.

Bearing Dimensions

Size Code	Shaft Diameter	Part Number	A Base to Centerline Height	B Distance Between Bolt Holes		BC	C	D	E	F	G	H	L	N	S	Approx. Weight
				Min	Max											
205	15/16	PPU215N*■Δ	2 1/2	6 1/16	6 7/16	6 17/64	7 3/4	7 7/8	4 1/4	3/8	2 3/4	7/8	4 5/8	1.313	5/8	16
206	1 3/16	PPU219N*■Δ	2 1/2	6 1/16	6 7/16	6 3/32	7 3/4	8	4 1/4	3/8	2 3/4	7/8	4 5/8	1.587	5/8	16
207	1 7/16	PPU223N*■Δ	3	7 3/4	8 1/4	8 21/32	10	10 7/8	5 1/2	1/2	3 1/2	1	5 11/16	1.847	7/8	36
209	1 11/16	PPU227N*■Δ	3	7 3/4	8 1/4	8 33/64	10	11	5 1/2	1/2	3 1/2	1	5 11/16	2.281	7/8	36
210	1 15/16	PPU231N*■Δ	3 1/2	9 1/8	9 7/8	11 11/32	12	13 7/8	7	5/8	4 1/2	1 1/4	6 25/64	2.475	1 1/8	60
211	2 3/16	PPU235N*■Δ	3 1/2	9 1/8	9 7/8	11 11/32	12	14 5/32	7	5/8	4 1/2	1 1/4	6 25/64	2.749	1 1/8	60
212	2 7/16	PPU239N*■Δ	3 1/2	9 1/8	9 7/8	11 3/8	12	14 1/2	7	5/8	4 1/2	1 1/4	6 19/32	3.012	1 1/8	65

Additional Notes

Please call 1-866-REXNORD for availability
Lubrication fitting tap size 1/8 in PT
Base to centerline tolerance, +.000 in/-.010 in
Insert bearing part numbers UB200XNL, where 00 should be replaced by the shaft size in the part number
*N lip seals standard

■ Available with H labyrinth seals
Δ Available with E3 triple lip seals
For the Selection Guide, Load Ratings and Speed Limits, see the Link-Belt 200 Series Ball Bearing Engineering section on pages 290 - 298.
Note: Dimensions subject to change. Certified dimensions of ordered material furnished on request.

FX3CL200

Interchange: *F2BDL, GRFT200, SFT-T*

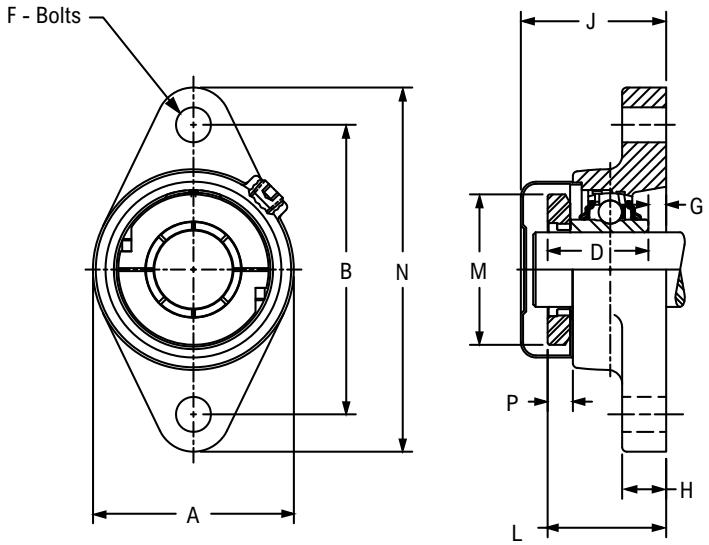

MTG Surface
to Collar Face

Product Features

- Corrosion-resistant powder coating
- Cast iron housing
- Broad range of sealing options
- Wide inner ring for increased shaft stability
- Alignable & relubricatable
- See Features and Benefits for additional info on pages 286 - 287.

Bearing Dimensions

Size Code	Shaft Diameter	Part Number	B Distance Between Bolt Holes	L Mounting Surface to Collar Face	A	D	F Bolts	G	H	J	M	N	P	Approx. Weight
203	1/2	FX3CL2B08N*■	3	1 1/4	2 1/8	1 3/32	3/8	5/32	1/2	1 25/32	1 5/8	3 7/8	1/4	0.90
	5/8	FX3CL210N*■												
	11/16	FX3CL211N*■												
204	3/4	FX3CL212N*■	3 17/32	1 9/16	2 7/16	1 11/32	3/8	13/64	9/16	2 1/16	1 59/64	4 13/32	3/8	1.20
	20.00	*FX3CL2M20N*■*	*89.69*	*39.90*	*61.90*	*34.04*	*10.00*	*5.20*	*14.30*	*52.30*	*48.77*	*111.90*	*9.53*	*0.54*
205	7/8	FX3CL214N*Δ■	3 57/64	1 17/32	2 11/16	1 3/8	7/16	3/16	19/32	2 1/16	2 5/64	4 29/32	3/8	1.60
	15/16	FX3CL215N*Δ■												
	1	FX3CL216N*Δ■												
	25.00	*FX3CL2M25N*Δ■*	*98.82*	*38.90*	*68.30*	*34.80*	*10.00*	*4.80*	*15.10*	*52.30*	*52.83*	*124.60*	*9.53*	*0.72*
206	1	FX3CL2B16N*Δ■	4 19/32	1 47/64	3 3/16	1 9/16	7/16	11/64	19/32	2 1/4	2 15/32	5 19/32	27/64	2.40
	1 1/8	FX3CL218N*Δ■												
	1 3/16	FX3CL219N*Δ■												
	1 1/4	FX3CL2E20N*Δ■												
	30.00	*FX3CL2M30N*Δ■*	*116.68*	*43.90*	*81.00*	*39.62*	*10.00*	*4.40*	*15.10*	*57.20*	*62.48*	*142.10*	*10.72*	*1.08*
207	1 3/16	FX3CL2B19N*Δ■	5 1/8	1 29/32	3 5/8	1 3/4	1/2	5/32	5/8	2 25/64	2 7/8	6 1/8	1/2	3.00
	1 1/4	FX3CL220N*Δ■												
	1 3/8	FX3CL222N*Δ■												
	1 7/16	FX3CL223N*Δ■												
	35.00	*FX3CL2M35N*Δ■*	*130.18*	*48.30*	*92.10*	*44.45*	*12.00*	*4.00*	*15.90*	*60.70*	*73.15*	*155.60*	*12.70*	*1.35*
208	1 7/16	FX3CL2B23N*Δ■	5 21/32	2 1/8	4	1 15/16	1/2	11/64	5/8	2 37/64	3 3/64	6 25/32	35/64	4.20
	1 1/2	FX3CL224N*Δ■												
	1 5/8	FX3CL2E26N*Δ■												
	40.00	*FX3CL2M40N*Δ■*	*143.67*	*53.90*	*101.60*	*49.28*	*12.00*	*4.40*	*15.90*	*65.50*	*77.47*	*172.20*	*13.72*	*1.90*
209	1 1/2	FX3CL2B24N*Δ■	5 27/32	2 1/8	4 1/4	1 61/64	1/2	7/64	5/8	2 19/32	3 17/64	7 3/32	33/64	5.10
	1 5/8	FX3CL226N*Δ■												
	1 11/16	FX3CL227N*Δ■												
	1 3/4	FX3CL228N*Δ■												
	45.00	*FX3CL2M45N*Δ■*	*148.30*	*53.90*	*108.00*	*49.53*	*12.00*	*2.80*	*15.90*	*65.80*	*82.80*	*180.20*	*13.21*	*2.30*
210	1 11/16	FX3CL2B27N*Δ■	6 3/16	2 7/16	4 9/16	2 5/64	9/16	19/64	3/4	2 59/64	3 5/8	7 7/16	39/64	6.30
	1 3/4	FX3CL2B28N*Δ■												
	1 7/8	FX3CL230N*Δ■												
	1 15/16	FX3CL231N*Δ■												

Continued...

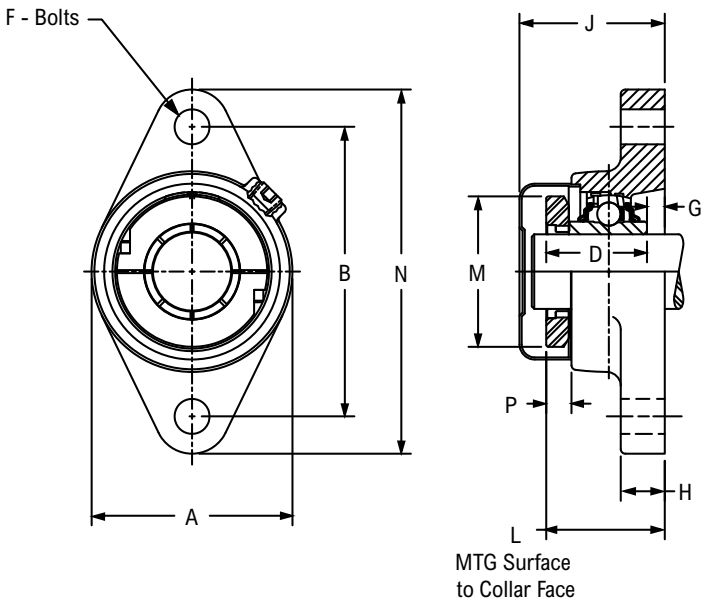

Continued...

Bearing Dimensions

Size Code	Shaft Diameter	Part Number	B Distance Between Bolt Holes	L Mounting Surface to Collar Face	A	D	F Bolts	G	H	J	M	N	P	Approx. Weight
210	2	FX3CL2E32N*Δ■	6 3/16	2 7/16	4 9/16	2 5/64	9/16	19/64	3/4	2 59/64	3 5/8	7 7/16	39/64	6.30
	50.00	*FX3CL2M50N*Δ■*	*157.16*	*62.00*	*115.90*	*52.58*	*14.00*	*7.50*	*19.00*	*75.00*	*92.20*	*188.90*	*15.24*	*2.84*
211	1 15/16	FX3CL2B31N*Δ■	7 1/4	2 21/32	5	2 15/64	5/8	13/32	13/16	3 11/64	3 29/32	8 1/2	21/32	7.40
	2	FX3CL232N*Δ■												
	2 3/16	FX3CL235N*Δ■												
	2 1/4	FX3CL2E36N*Δ■												
	55.00	*FX3CL2M55N*Δ■*	*184.15*	*67.30*	*127.00*	*56.90*	*16.00*	*10.30*	*20.60*	*80.50*	*99.31*	*215.90*	*16.51*	*3.33*

Additional Notes

Please call 1-866-REXNORD for availability
Lubrication fitting tap size 1/8 in PT
* N lip seals standard
■ Available with H labyrinth seals
Δ Available with E3 triple lip seals
Nickel plated housings available, add suffix K75

For the Selection Guide, Load Ratings and Speed Limits, see the Link-Belt 200 Series Ball Bearing Engineering section on pages 290 - 298.

Note: Dimensions subject to change. Certified dimensions of ordered material furnished on request.

FX3Y200

Interchange: *F2BSXR, FYT-WF, HCFTS200, RCJT*

Photo Shows a 2-Bolt Ball Bearing Flanged Unit

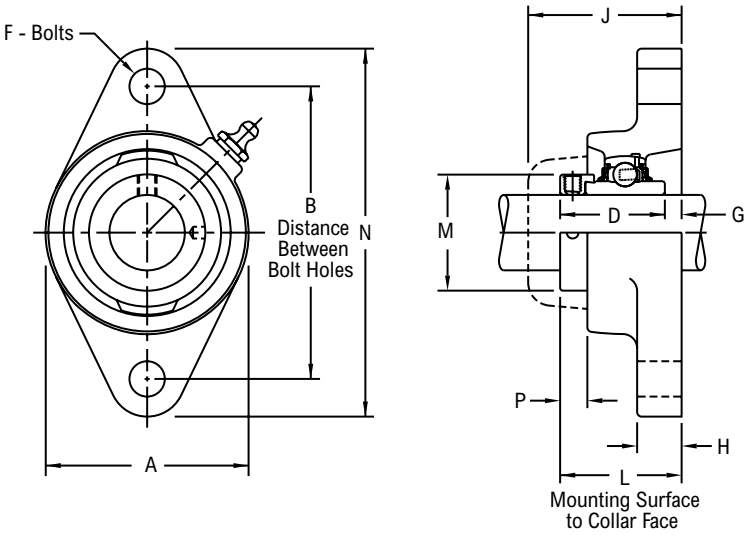

Product Features

- Corrosion-resistant powder coating
- Cast iron housing
- Broad range of sealing options
- Wide inner ring for increased shaft stability
- Eccentric cam locking device
- Alignable & relubricatable
- See Features and Benefits for additional info on pages 286 - 287.

Bearing Dimensions

Size Code	Shaft Diameter	Part Number	B Distance Between Bolt Holes	L Mounting Surface to Collar Face	A	D	F Bolts	G	H	J	M	N	P	Approx. Weight
203	1/2	FX3Y2B08N*■	3	1 17/32	2 1/8	1 15/32	3/8	1/16	1/2	1 25/32	1 1/8	3 7/8	33/64	1.00
	5/8	FX3Y210N*■												
	11/16	FX3Y211N*■												
204	3/4	FX3Y212N*■	3 17/32	1 51/64	2 7/16	1 23/32	3/8	1/16	9/16	2 1/64	1 5/16	4 13/32	37/64	1.30
205	7/8	FX3Y214N*Δ■	3 57/64	1 13/16	2 11/16	1 3/4	7/16	1/16	19/32	2	1 1/2	4 29/32	35/64	1.70
	15/16	FX3Y215N*Δ■												
	1	FX3Y216N*Δ■												
206	1 1/8	FX3Y218N*Δ■	4 19/32	1 31/32	3 3/16	1 29/32	7/16	1/16	19/32	2 15/64	1 3/4	5 19/32	21/32	2.50
	1 3/16	FX3Y219N*Δ■												
	1 1/4	FX3Y2E20N*Δ■												
207	1 1/4	FX3Y220N*Δ■	5 1/8	2 5/64	3 5/8	2 1/64	1/2	1/16	5/8	2 23/64	2 3/16	6 1/8	11/16	3.30
	1 3/8	FX3Y222N*Δ■												
	1 7/16	FX3Y223N*Δ■												
208	1 1/2	FX3Y224N*Δ■	5 21/32	2 9/32	4	2 7/32	1/2	1/16	5/8	2 35/64	2 3/8	6 25/32	45/64	4.50
209	1 5/8	FX3Y226N*Δ■	5 27/32	2 9/32	4 1/4	2 7/32	1/2	1/16	5/8	2 9/16	2 1/2	7 3/32	11/16	5.40
	1 11/16	FX3Y227N*Δ■												
	1 3/4	FX3Y228N*Δ■												
210	1 15/16	FX3Y231N*Δ■	6 3/16	2 5/8	4 9/16	2 15/32	9/16	5/32	3/4	2 57/64	2 3/4	7 7/16	25/32	6.60
	2	FX3Y2E32N*Δ■												
211	2	FX3Y232N*Δ■	7 1/4	2 31/32	5	2 13/16	5/8	5/32	13/16	3 1/4	3	8 1/2	31/32	8.00
	2 3/16	FX3Y235N*Δ■												

Additional Notes

Please call 1-866-REXNORD for availability

Lubrication fitting tap size: for size code 203, 1/4 in-28 UNF: for all other size codes, 1/8 in PT

* N lip seals standard

■ Available with H labyrinth seals

Δ Available with E3 triple lip seals

Nickel plated housings available, add suffix K75

For the Selection Guide, Load Ratings and Speed Limits, see the Link-Belt 200 Series Ball Bearing Engineering section on pages 290 - 298.

Note: Dimensions subject to change. Certified dimensions of ordered material furnished on request.

FX3U200

Interchange: *F2BSC, FYT-TF, UCFT200, SFT, YCJT*

Photo Shows a 2-Bolt Ball Bearing Flanged Unit

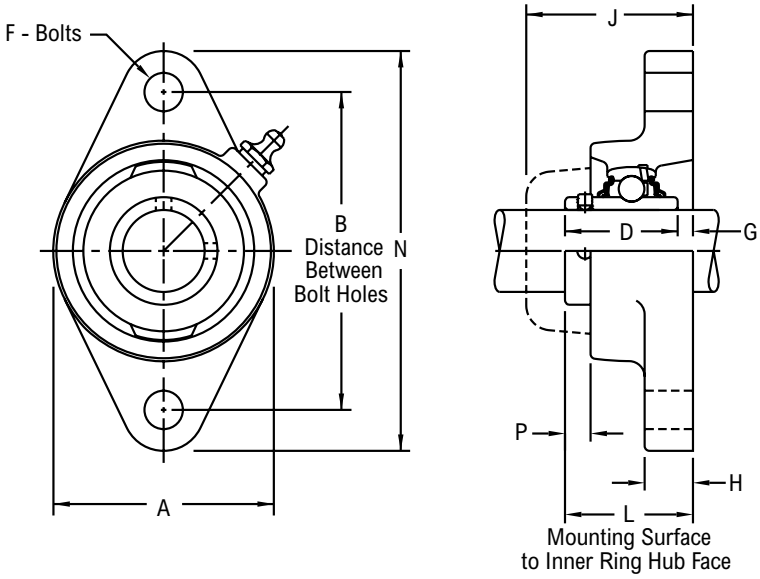

Product Features

- Corrosion-resistant powder coating
- Cast iron housing
- Broad range of sealing options
- Wide inner ring for increased shaft stability
- Spring locking setscrew mount
- Alignable & relubricatable
- See Features and Benefits for additional info on pages 286 - 287.

Size Code	Shaft Diameter	Part Number	B Distance Between Bolt Holes	L Mounting Surface to Inner Ring Hub Face	A	D	F Bolts	G	H	J	N	P	Approx. Weight
203	1/2	FX3U2B08N*■	3	1 1/4	2 1/8	1 3/32	3/8	5/32	1/2	1 25/32	3 7/8	1/4	0.90
	5/8	FX3U210N*■											
	11/16	FX3U211N*■											
	17.00	*FX3U2M17N*■*	*76.20*	*31.80*	*54.00*	*27.78*	*10.00*	*4.00*	*12.70*	*45.20*	*98.40*	*6.40*	*0.41*
204	3/4	FX3U212N*■	3 17/32	1 31/64	2 7/16	1 9/32	3/8	13/64	9/16	2 1/64	4 13/32	9/32	1.20
	20.00	*FX3U2M20N*■*	*89.69*	*37.70*	*61.90*	*32.54*	*10.00*	*5.20*	*14.30*	*51.20*	*111.90*	*7.10*	*0.54*
205	7/8	FX3U214N*Δ■	3 57/64	1 35/64	2 11/16	1 23/64	7/16	3/16	19/32	2	4 29/32	19/64	1.60
	15/16	FX3U215N*Δ■											
	1	FX3U216N*Δ■											
	25.00	*FX3U2M25N*Δ■*	*98.82*	*39.30*	*68.30*	*34.53*	*10.00*	*4.80*	*15.10*	*50.80*	*124.60*	*7.50*	*0.72*
206	1 1/8	FX3U218N*Δ■	4 19/32	1 47/64	3 3/16	1 9/16	7/16	11/64	19/32	2 15/64	5 19/32	27/64	2.40
	1 3/16	FX3U219N*Δ■											
	1 1/4	FX3U2E20N*Δ■											
	30.00	*FX3U2M30N*Δ■*	*116.68*	*44.00*	*81.00*	*39.69*	*10.00*	*4.40*	*15.10*	*56.70*	*142.10*	*10.70*	*1.08*
207	1 1/4	FX3U220N*Δ■	5 1/8	1 59/64	3 5/8	1 49/64	1/2	5/32	5/8	2 23/64	6 1/8	33/64	3.00
	1 3/8	FX3U222N*Δ■											
	1 7/16	FX3U223N*Δ■											
	35.00	*FX3U2M35N*Δ■*	*130.18*	*48.80*	*92.10*	*44.85*	*12.00*	*4.00*	*15.90*	*59.90*	*155.60*	*13.10*	*1.35*
208	1 1/2	FX3U224N*Δ■	5 21/32	2 5/64	4	1 29/32	1/2	11/64	5/8	2 35/64	6 25/32	1/2	4.20
	40.00	*FX3U2M40N*Δ■*	*143.67*	*52.80*	*101.60*	*48.42*	*12.00*	*4.40*	*15.90*	*64.70*	*172.20*	*12.70*	*1.90*
209	1 5/8	FX3U226N*Δ■	5 27/32	2 9/64	4 1/4	2 1/32	1/2	7/64	5/8	2 9/16	7 3/32	35/64	5.10
	1 11/16	FX3U227N*Δ■											
	1 3/4	FX3U228N*Δ■											
	45.00	*FX3U2M45N*Δ■*	*148.30*	*54.40*	*108.00*	*51.59*	*12.00*	*2.80*	*15.90*	*65.10*	*180.20*	*13.90*	*2.30*
210	1 15/16	FX3U231N*Δ■	6 3/16	2 25/64	4 9/16	2 3/32	9/16	19/64	3/4	2 57/64	7 7/16	9/16	6.30
	2	FX3U2E32N*Δ■											
	50.00	*FX3U2M50N*Δ■*	*157.16*	*60.70*	*115.90*	*53.18*	*14.00*	*7.50*	*19.00*	*73.40*	*188.90*	*14.30*	*2.84*
211	2	FX3U232N*Δ■	7 1/4	2 21/32	5	2 1/4	5/8	13/32	13/16	3 1/4	8 1/2	21/32	7.40
	2 3/16	FX3U235N*Δ■											
	55.00	*FX3U2M55N*Δ■*	*184.15*	*67.50*	*127.00*	*57.15*	*16.00*	*10.30*	*20.60*	*82.60*	*215.90*	*16.70*	*3.33*

Additional Notes

Please call 1-866-REXNORD for availability

Lubrication fitting tap size: for size code 203, 1/4 in-28 UNF: for all other size codes, 1/8 in PT

* N lip seals standard

■ Available with H labyrinth seals

Δ Available with E3 triple lip seals

Nickel plated housings available, add suffix K75

For the Selection Guide, Load Ratings and Speed Limits, see the Link-Belt 200 Series Ball Bearing Engineering section on pages 290 - 298.

Note: Dimensions subject to change. Certified dimensions of ordered material furnished on request.

FX3W200

Interchange: *F2BSXV, FYT-FM, FHFT200-G, VF2E100, VCJT*

Photo Shows a 2-Bolt Ball Bearing Flanged Unit

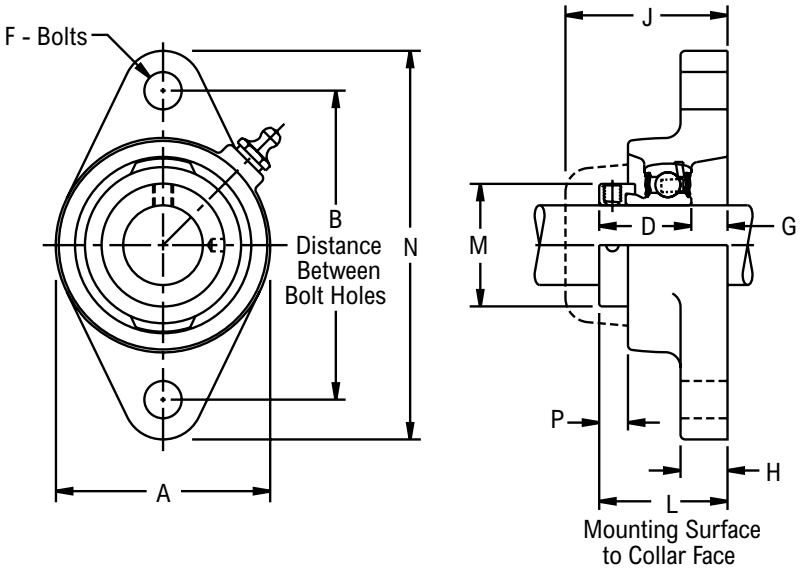

Product Features

Corrosion-resistant powder coating
Cast iron housing
Eccentric cam locking device
Alignable & relubricatable
See Features and Benefits for additional info on pages 286 - 287.

Bearing Dimensions

Size Code	Shaft Diameter	Part Number	B Distance Between Bolt Holes	L Mounting Surface to Collar Face	A	D	F Bolts	G	H	J	M	N	P	Approx. Weight
203	1/2	FX3W2B08E▲	3	1 31/64	2 1/8	1 1/8	3/8	23/64	1/2	1 25/32	1 1/8	3 7/8	15/32	0.60
	5/8	FX3W210E▲												
204	3/4	FX3W212E▲	3 17/32	1 21/32	2 7/16	1 7/32	3/8	7/16	9/16	2 1/64	1 5/16	4 13/32	29/64	1.00
205	7/8	FX3W214E▲	3 57/64	1 43/64	2 11/16	1 7/32	7/16	29/64	19/32	2	1 1/2	4 29/32	27/64	1.40
	15/16	FX3W215E▲												
	1	FX3W216E▲												
206	1 1/8	FX3W218E▲	4 19/32	1 53/64	3 3/16	1 13/32	7/16	27/64	19/32	2 15/64	1 3/4	5 19/32	33/64	2.10
	1 3/16	FX3W219E▲												
	1 1/4	FX3W2E20E▲												
207	1 1/4	FX3W220E▲	5 1/8	1 31/32	3 5/8	1 17/32	1/2	7/16	5/8	2 23/64	2 3/16	6 1/8	9/16	3.00
	1 3/8	FX3W222E▲												
	1 7/16	FX3W223E▲												
208	1 1/2	FX3W224E▲	5 21/32	2 3/16	4	1 23/32	1/2	15/32	5/8	2 35/64	2 3/8	6 25/32	39/64	4.00
209	1 5/8	FX3W226E▲	5 27/32	2 3/16	4 1/4	1 23/32	1/2	15/32	5/8	2 9/16	2 1/2	7 3/32	19/32	4.70
	1 11/16	FX3W227E▲												
	1 3/4	FX3W228E▲												
210	1 15/16	FX3W231E▲	6 3/16	2 13/32	4 9/16	1 23/32	9/16	11/16	3/4	2 57/64	2 3/4	7 7/16	9/16	5.70
	2	FX3W2E32E▲												

Additional Notes

Please call 1-866-REXNORD for availability
Lubrication fitting tap size: for size code 203, 1/4 in-28 UNF: for all other size codes, 1/8 in PT
▲ E lip seals standard
Nickel plated housings available, add suffix K75

For the Selection Guide, Load Ratings and Speed Limits, see the Link-Belt 200 Series Ball Bearing Engineering section on pages 290 - 298.
Note: Dimensions subject to change. Certified dimensions of ordered material furnished on request.

FX3S200

Interchange: *F2BVSC, FYT-RM, FHSFT200-G, VF2S100, SCJT*

Photo Shows a 2-Bolt Ball Bearing Flanged Unit

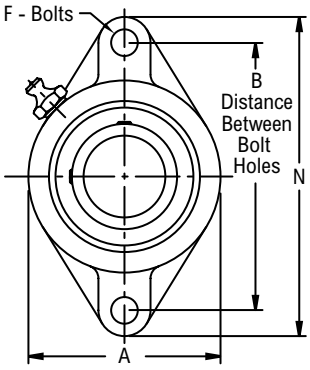

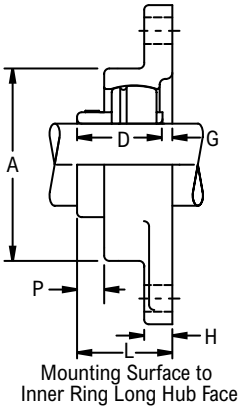

Product Features

- Corrosion-resistant powder coating
- Cast iron housing
- Broad range of sealing options
- Spring locking setscrew mount
- Alignable & relubricatable
- See Features and Benefits for additional info on pages 286 - 287.

Bearing Dimensions

Size Code	Shaft Diameter	Part Number	B Distance Between Bolt Holes	L Mounting Surface to Inner Ring Long Hub Face	A	D	F Bolts	G	H	N	P	Approx. Weight
203	1/2	FX3S2B08E♦● □Δ	3	1 1/8	2 5/16	63/64	3/8	9/64	3/8	3 7/8	5/16	0.81
	5/8	FX3S210E♦● □Δ										0.77
	11/16	FX3S211E♦● □Δ										0.75
204	3/4	FX3S212E♦● □Δ	3 17/32	1 9/32	2 3/8	1 1/8	3/8	9/64	7/16	4 13/32	13/32	0.91
	20.00	*FX3S2M20E♦● □Δ*	*89.69*	*32.20*	*60.30*	*28.58*	*10.00*	*3.60*	*11.10*	*111.90*	*10.30*	*0.40*
205	7/8	FX3S214E♦● □Δ	3 57/64	1 5/16	2 3/4	1 11/64	7/16	1/8	1/2	4 7/8	7/16	1.32
	15/16	FX3S215E♦● □Δ										1.29
	1	FX3S216E♦● □Δ										1.26
	25.00	*FX3S2M25E♦● □Δ*	*98.82*	*33.30*	*69.80*	*29.77*	*10.00*	*3.20*	*12.70*	*123.80*	*11.10*	*0.60*
206	1 1/8	FX3S218E♦● □Δ	4 19/32	1 1/2	3 3/16	1 11/32	7/16	9/64	17/32	5 9/16	9/16	1.79
	1 3/16	FX3S219E♦● □Δ										1.75
	1 1/4	FX3S2E20E♦● □Δ										1.71
	30.00	*FX3S2M30E♦● □Δ*	*116.68*	*38.10*	*81.00*	*34.14*	*10.00*	*3.60*	*13.50*	*141.30*	*14.30*	*0.80*
207	1 1/4	FX3S220E♦● □Δ	5 1/8	1 23/32	3 11/16	1 9/16	1/2	9/64	9/16	6 1/8	21/32	2.69
	1 3/8	FX3S222E♦● □Δ										2.59
	1 7/16	FX3S223E♦● □Δ										2.54
	35.00	*FX3S2M35E♦● □Δ*	*130.18*	*43.70*	*93.70*	*39.67*	*12.00*	*3.60*	*14.30*	*155.60*	*16.70*	*1.20*
208	1 1/2	FX3S224E♦● □Δ	5 21/32	1 13/16	4 1/8	1 21/32	1/2	5/32	9/16	6 3/4	21/32	3.47
	1 5/8	FX3S2E26E♦● □Δ										3.33
	40.00	*FX3S2M40E♦● □Δ*	*143.67*	*46.00*	*104.80*	*42.06*	*12.00*	*4.00*	*14.30*	*171.40*	*16.70*	*1.50*
209	1 5/8	FX3S226E♦● □Δ	5 27/32	1 29/32	4 3/8	1 49/64	9/16	1/8	9/16	7 1/16	23/32	3.46
	1 11/16	FX3S227E♦● □Δ										3.39
	1 3/4	FX3S228E♦● □Δ										3.32
210	1 7/8	FX3S230E♦● □Δ	6 3/16	1 29/32	4 9/16	1 13/16	9/16	7/64	5/8	7 15/32	23/32	4.43
	1 15/16	FX3S231E♦● □Δ										4.34
	2	FX3S2E32E♦● □Δ										4.25
211	2	FX3S232E♦● □Δ	7 1/4	2	5	1 13/16	5/8	11/64	23/32	8 1/2	11/16	6.04
	2 3/16	FX3S235E♦● □Δ										5.74
	2 1/4	FX3S2E36E♦● □Δ										5.64

Additional Notes

- Please call 1-866-REXNORD for availability
- Lubrication fitting tap size: for size codes 203 thru 205, 1/4-28 UNF: for all other size codes, 1/8 in PT
- Lip seals standard
- ♦ Available with E1 viton seals
- Available with free running style seals, add suffix ● FF, □ HFF or Δ MHFF
- Nickel plated housings available, add suffix K75
- For the Selection Guide, Load Ratings and Speed Limits, see the Link-Belt 200 Series Ball Bearing Engineering section on pages 290 - 298.
- Note: Dimensions subject to change. Certified dimensions of ordered material furnished on request.

F3CL200

Interchange: *F4BDL, GRF200, SF-T*

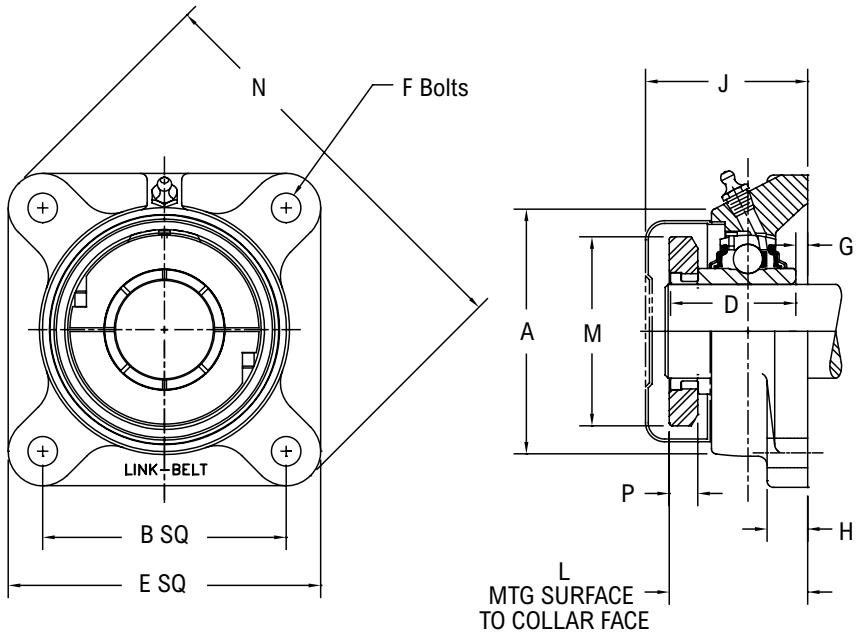

Product Features

- Corrosion-resistant powder coating
- Cast iron housing
- Broad range of sealing options
- Wide inner ring for increased shaft stability
- Alignable & relubricatable
- See Features and Benefits for additional info on pages 286 - 287.

Bearing Dimensions

Size Code	Shaft Diameter	Part Number	B Distance Between Bolt Holes	L Mounted Surface to Collar Face	A	D	E	F Bolts	G	H	J	M	N	P	Approx. Weight
204	3/4	F3CL212N*■	2 1/2	1 9/16	2 7/16	1 11/32	3 3/8	3/8	13/64	9/16	2 1/16	1 59/64	4 13/32	3/8	1.50
	20.00	*F3CL2M20N*■*	*63.50*	*39.90*	*61.90*	*34.04*	*85.70*	*10.00*	*5.20*	*14.30*	*52.30*	*48.77*	*111.90*	*9.53*	*0.68*
205	7/8	F3CL214N*Δ■	2 3/4	1 17/32	2 11/16	1 3/8	3 3/4	7/16	3/16	19/32	2 1/16	2 5/64	4 29/32	3/8	1.90
	15/16	F3CL215N*Δ■													
	1	F3CL216N*Δ■													
	25.00	*F3CL2M25N*Δ■*	*69.85*	*38.90*	*68.30*	*34.80*	*95.20*	*10.00*	*4.80*	*15.10*	*52.30*	*52.83*	*124.60*	*9.53*	*0.86*
206	1	F3CL2B16N*Δ■	3 1/4	1 47/64	3 3/16	1 9/16	4 1/4	7/16	11/64	19/32	2 1/4	2 15/32	5 19/32	27/64	3.10
	1 1/8	F3CL218N*Δ■													
	1 3/16	F3CL219N*Δ■													
	1 1/4	F3CL2E20N*Δ■													
	30.00	*F3CL2M30N*Δ■*	*82.55*	*43.90*	*81.00*	*39.62*	*108.00*	*10.00*	*4.40*	*15.10*	*57.20*	*62.48*	*142.10*	*10.72*	*1.40*
207	1 3/16	F3CL2B19N*Δ■	3 5/8	1 29/32	3 5/8	1 3/4	4 5/8	1/2	5/32	5/8	2 25/64	2 7/8	6 1/8	1/2	3.90
	1 1/4	F3CL220N*Δ■													
	1 3/8	F3CL222N*Δ■													
	1 7/16	F3CL223N*Δ■													
	35.00	*F3CL2M35N*Δ■*	*92.08*	*48.30*	*92.10*	*44.45*	*117.50*	*12.00*	*4.00*	*15.90*	*60.70*	*73.15*	*155.60*	*12.70*	*1.75*
208	1 7/16	F3CL2B23N*Δ■	4	2 1/8	4	1 15/16	5 1/8	1/2	11/64	5/8	2 37/64	3 3/64	6 25/32	35/64	5.00
	1 1/2	F3CL224N*Δ■													
	1 5/8	F3CL2E26N*Δ■													
	40.00	*F3CL2M40N*Δ■*	*101.60*	*53.90*	*101.60*	*49.28*	*130.20*	*12.00*	*4.40*	*15.90*	*65.50*	*77.47*	*172.20*	*13.72*	*2.25*
209	1 1/2	F3CL2B24N*Δ■	4 1/8	2 1/8	4 1/4	1 61/64	5 3/8	1/2	7/64	5/8	2 19/32	3 17/64	7 3/32	33/64	6.20
	1 5/8	F3CL226N*Δ■													
	1 11/16	F3CL227N*Δ■													
	1 3/4	F3CL228N*Δ■													
	45.00	*F3CL2M45N*Δ■*	*104.78*	*53.90*	*108.00*	*49.53*	*136.50*	*12.00*	*2.80*	*15.90*	*65.80*	*82.80*	*180.20*	*13.21*	*2.80*
210	1 11/16	F3CL2B27N*Δ■	4 3/8	2 23/64	4 1/2	2 5/64	5 5/8	1/2	13/64	3/4	2 53/64	3 5/8	7 7/16	5/8	6.90
	1 3/4	F3CL2B28N*Δ■													
	1 7/8	F3CL230N*Δ■													
	1 15/16	F3CL231N*Δ■													
	2	F3CL2E32N*Δ■	4 3/8	2 23/64	4 1/2	2 5/64	5 5/8	1/2	13/64	3/4	2 53/64	3 5/8	7 7/16	5/8	6.90
	50.00	*F3CL2M50N*Δ■*	*111.12*	*59.70*	*114.30*	*52.58*	*142.90*	*12.00*	*5.20*	*19.00*	*71.90*	*92.20*	*188.90*	*15.75*	*3.10*

Continued...

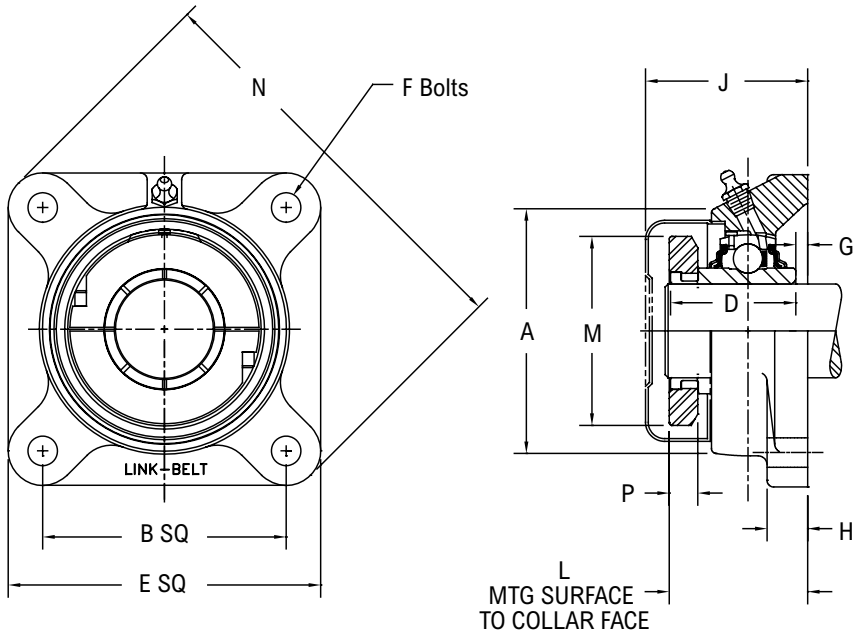

Continued...

Bearing Dimensions

Size Code	Shaft Diameter	Part Number	B Distance Between Bolt Holes	L Mounted Surface to Collar Face	A	D	E	F Bolts	G	H	J	M	N	P	Approx. Weight
211	1 15/16	F3CL2B31N*Δ■	5 1/8	2 9/16	4 15/16	2 15/64	6 3/8	5/8	5/16	29/32	3 5/64	3 29/32	8 1/2	5/8	8.90
	2	F3CL232N*Δ■													
	2 3/16	F3CL235N*Δ■													
	2 1/4	F3CL2E36N*Δ■													
	55.00	*F3CL2M55N*Δ■*	*130.18*	*65.00*	*125.40*	*56.75*	*161.90*	*16.00*	*7.90*	*23.00*	*78.20*	*99.22*	*215.90*	*15.75*	*4.00*
212	2 3/16	F3CL2B35N*Δ■	5 5/8	2 55/64	5 3/8	2 19/32	6 7/8	5/8	11/32	15/16	3 23/64	4 3/16	9 7/32	21/32	11.90
	2 1/4	F3CL236N*Δ■													
	2 3/8	F3CL238N*Δ■													
	2 7/16	F3CL239N*Δ■													
	60.00	*F3CL2M60N*Δ■*	*142.88*	*72.60*	*136.50*	*65.88*	*174.60*	*16.00*	*8.70*	*23.80*	*85.30*	*106.36*	*234.20*	*16.76*	*5.35*
213	2 1/2	F3CL240N *Δ	5 7/8	2 27/32	5 7/8	2 3/4	7 3/8	5/8	3/32	3/4	3 13/64	4 51/64	9 13/16	5/8	14.40
	2 11/16	F3CL243N *Δ													
	65.00	*F3CL2M65N *Δ*	*149.22*	*72.14*	*149.22*	*69.85*	*187.30*	*16.00*	*2.40*	*19.00*	*81.36*	*121.84*	*249.20*	*15.90*	*6.50*
215	2 3/4	F3CL244N *Δ	6	3	6	2 59/64	7 3/4	3/4	3/32	3/4	3 37/64	5 1/4	10 1/4	11/16	17.40
	2 15/16	F3CL247N *Δ													
	3	F3CL2E48N *Δ													
	75.00	*F3CL2M75N *Δ*	*152.40*	*76.45*	*152.40*	*74.22*	*196.80*	*20.00*	*2.40*	*19.00*	*90.88*	*133.35*	*260.40*	*17.50*	*7.85*
217	3 7/16	F3CL255N *Δ	6 3/4	3 11/16	6 3/4	3 39/64	8 9/16	3/4	3/32	1	4 27/64	5 23/32	11 3/8	3/4	25.70
	3 1/2	F3CL2E56N *Δ													
	85.00	*F3CL2M85N *Δ*	*171.45*	*93.73*	*171.45*	*91.68*	*217.50*	*20.00*	*2.40*	*25.40*	*112.31*	*145.25*	*288.90*	*19.00*	*11.55*

Additional Notes

Please call 1-866-REXNORD for availability

Lubrication fitting tap size: for size code 203, 1/4 in-28 UNF: for all other size codes, 1/8 in PT

* N lip seals standard

■ Available with H labyrinth seals

Δ Available with E3 triple lip seals

Nickel plated housings available, add suffix K75

For the Selection Guide, Load Ratings and Speed Limits, see the Link-Belt 200 Series Ball Bearing Engineering section on pages 290 - 298.

Note: Dimensions subject to change. Certified dimensions of ordered material furnished on request.

F3Y200

Interchange: *F4BSXR, FY-WF, HCFS200, RCJ*

Photo Shows a 4-Bolt Ball Bearing Flanged Unit

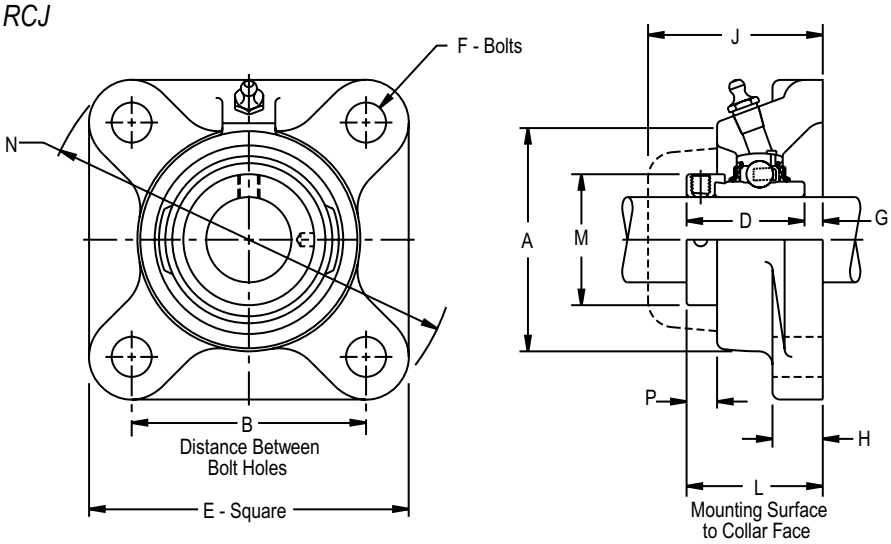

Product Features

- Corrosion-resistant powder coating
- Cast iron housing
- Broad range of sealing options
- Wide inner ring for increased shaft stability
- Eccentric cam locking device
- Alignable & relubricatable
- See Features and Benefits for additional info on pages 286 - 287.

Bearing Dimensions

Size Code	Shaft Diameter	Part Number	B Distance Between Bolt Holes	L Mounting Surface to Collar Face	A	D	E	F Bolts	G	H	J	M	N	P	Approx. Weight
204	3/4	F3Y212N *■	2 1/2	1 51/64	2 7/16	1 23/32	3 3/8	3/8	1/16	9/16	2 1/64	1 5/16	4 13/32	37/64	1.60
205	7/8	F3Y214N *Δ■	2 3/4	1 13/16	2 11/16	1 3/4	3 3/4	7/16	1/16	19/32	2	1 1/2	4 29/32	35/64	2.00
	15/16	F3Y215N *Δ■													
	1	F3Y216N *Δ■													
206	1 1/8	F3Y218N *Δ■	3 1/4	1 31/32	3 3/16	1 29/32	4 1/4	7/16	1/16	19/32	2 15/64	1 3/4	5 19/32	21/32	3.20
	1 3/16	F3Y219N *Δ■													
	1 1/4	F3Y2E20N *Δ■													
207	1 1/4	F3Y220N *Δ■	3 5/8	2 5/64	3 5/8	2 1/64	4 5/8	1/2	1/16	5/8	2 23/64	2 3/16	6 1/8	11/16	4.20
	1 3/8	F3Y222N *Δ■													
	1 7/16	F3Y223N *Δ■													
208	1 1/2	F3Y224N *Δ■	4	2 9/32	4	2 7/32	5 1/8	1/2	1/16	5/8	2 35/64	2 3/8	6 25/32	45/64	5.30
209	1 5/8	F3Y226N *Δ■	4 1/8	2 9/32	4 1/4	2 7/32	5 3/8	1/2	1/16	5/8	2 9/16	2 1/2	7 3/32	11/16	6.50
	1 11/16	F3Y227N *Δ■													
	1 3/4	F3Y228N *Δ■													
210	1 15/16	F3Y231N *Δ■	4 3/8	2 17/32	4 1/2	2 15/32	5 5/8	1/2	1/16	3/4	2 13/16	2 3/4	7 7/16	51/64	7.20
	2	F3Y2E32N *Δ■													
211	2	F3Y232N *Δ■	5 1/8	2 7/8	4 15/16	2 13/16	6 3/8	5/8	1/16	29/32	3 11/64	3	8 1/2	15/16	9.50
	2 3/16	F3Y235N *Δ■													
212	2 1/4	F3Y236N *Δ■	5 5/8	3 1/8	5 3/8	3 1/16	6 7/8	5/8	1/16	15/16	3 25/64	3 5/16	9 7/32	15/16	12.50
	2 3/8	F3Y238N *Δ■													
	2 7/16	F3Y239N *Δ■													

Additional Notes

Please call 1-866-REXNORD for availability

Lubrication fitting tap size: for size code 203, 1/4 in-28 UNF: for all other size codes, 1/8 in PT

* N lip seals standard

■ Available with H labyrinth seals

Δ Available with E3 triple lip seals

Nickel plated housings available, add suffix K75

For the Selection Guide, Load Ratings and Speed Limits, see the Link-Belt 200 Series Ball Bearing Engineering section on pages 290 - 298.

Note: Dimensions subject to change. Certified dimensions of ordered material furnished on request.

F3U200

Interchange: *F4BSC, FY-TF, UCF200, SF, YCJ*

Photo Shows a 4-Bolt Ball Bearing Flanged Unit

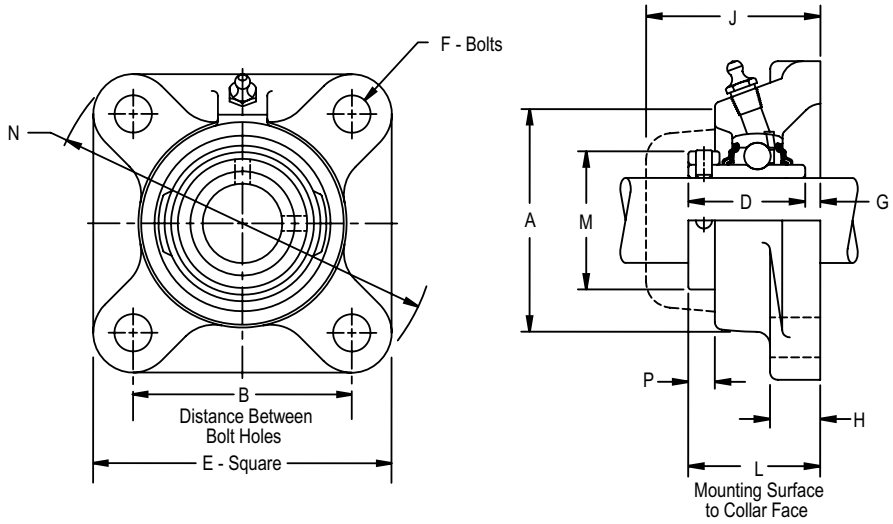

Product Features

- Corrosion-resistant powder coating
- Cast iron housing
- Broad range of sealing options
- Wide inner ring for increased shaft stability
- Spring locking setscrew mount
- Alignable & relubricatable
- See Features and Benefits for additional info on pages 286 - 287.

Bearing Dimensions

Size Code	Shaft Diameter	Part Number	B Distance Between Bolt Holes	L Mounting Surface to Collar Face	A	D	E	F Bolts	G	H	J	M	N	P	Approx. Weight
203	1/2	F3U2B08N *■	2 1/8	1 1/4	2 1/8	1 3/32	3	3/8	5/32	1/2	1 25/32	-	3 7/8	1/4	1.00
	5/8	F3U210N *■													
	11/16	F3U211N *■													
	17.00	*F3U2M17N *■*	*53.98*	*31.80*	*54.00*	*27.78*	*76.20*	*10.00*	*4.00*	*12.70*	*45.20*	*-*	*98.40*	*6.40*	*0.45*
204	3/4	F3U212N *■	2 1/2	1 31/64	2 7/16	1 9/32	3 3/8	3/8	13/64	9/16	2 1/64	-	4 13/32	9/32	1.50
	20.00	*F3U2M20N *■*	*63.50*	*37.70*	*61.90*	*32.54*	*85.70*	*10.00*	*5.20*	*14.30*	*51.20*	*-*	*111.90*	*7.10*	*0.68*
205	7/8	F3U214N *Δ■	2 3/4	1 35/64	2 11/16	1 23/64	3 3/4	7/16	3/16	19/32	2	-	4 29/32	19/64	1.90
	15/16	F3U215N *Δ■													
	1	F3U216N *Δ■													
	25.00	*F3U2M25N *Δ■*	*69.85*	*39.30*	*68.30*	*34.53*	*95.20*	*10.00*	*4.80*	*15.10*	*50.80*	*-*	*124.60*	*7.50*	*0.86*
206	1 1/8	F3U218N *Δ■	3 1/4	1 47/64	3 3/16	1 9/16	4 1/4	7/16	11/64	19/32	2 15/64	-	5 19/32	7/16	3.10
	1 3/16	F3U219N *Δ■													
	1 1/4	F3U2E20N *Δ■													
	30.00	*F3U2M30N *Δ■*	*82.55*	*44.00*	*81.00*	*39.69*	*108.00*	*10.00*	*4.40*	*15.10*	*56.70*	*-*	*142.10*	*11.10*	*1.40*
207	1 1/4	F3U220N *Δ■	3 5/8	1 59/64	3 5/8	1 49/64	4 5/8	1/2	5/32	5/8	2 23/64	-	6 1/8	33/64	3.90
	1 3/8	F3U222N *Δ■													
	1 7/16	F3U223N *Δ■													
	35.00	*F3U2M35N *Δ■*	*92.08*	*48.80*	*92.10*	*44.85*	*117.50*	*12.00*	*4.00*	*15.90*	*59.90*	*-*	*155.60*	*13.10*	*1.75*
208	1 1/2	F3U224N *Δ■	4	2 5/64	4	1 29/32	5 1/8	1/2	11/64	5/8	2 35/64	-	6 25/32	1/2	5.00
	40.00	*F3U2M40N *Δ■*	*101.60*	*52.80*	*101.60*	*48.42*	*130.20*	*12.00*	*4.40*	*15.90*	*64.70*	*-*	*172.20*	*12.70*	*2.25*
209	1 5/8	F3U226N *Δ■	4 1/8	2 9/64	4 1/4	2 1/32	5 3/8	1/2	7/64	5/8	2 9/16	-	7 3/32	35/64	6.20
	1 11/16	F3U227N *Δ■													
	1 3/4	F3U228N *Δ■													
	45.00	*F3U2M45N *Δ■*	*104.78*	*54.40*	*108.00*	*51.59*	*136.50*	*12.00*	*2.80*	*15.90*	*65.10*	*-*	*180.20*	*13.90*	*2.80*
210	1 15/16	F3U231N *Δ■	4 3/8	2 19/64	4 1/2	2 3/32	5 5/8	1/2	13/64	3/4	2 13/16	-	7 7/16	9/16	6.90
	2	F3U2E32N *Δ■													
	50.00	*F3U2M50N *Δ■*	*111.12*	*58.30*	*114.30*	*53.18*	*142.90*	*12.00*	*5.20*	*19.00*	*71.40*	*-*	*188.90*	*14.30*	*3.10*
211	2	F3U232N *Δ■	5 1/8	2 9/16	4 15/16	2 1/4	6 3/8	5/8	5/16	29/32	3 11/64	-	8 1/2	5/8	8.90
	2 3/16	F3U235N *Δ■													
	55.00	*F3U2M55N *Δ■*	*130.18*	*65.10*	*125.40*	*57.15*	*161.90*	*16.00*	*7.90*	*23.00*	*80.60*	*-*	*215.90*	*15.90*	*4.00*
212	2 1/4	F3U236N *Δ■	5 5/8	2 27/32	5 3/8	2 1/2	6 7/8	5/8	11/32	15/16	3 25/64	-	9 7/32	41/64	11.90
	2 3/8	F3U238N *Δ■													
	2 7/16	F3U239N *Δ■													
	60.00	*F3U2M60N *Δ■*	*142.88*	*72.20*	*136.50*	*63.50*	*174.60*	*16.00*	*8.70*	*23.80*	*86.10*	*-*	*234.20*	*16.30*	*5.35*

Continued...

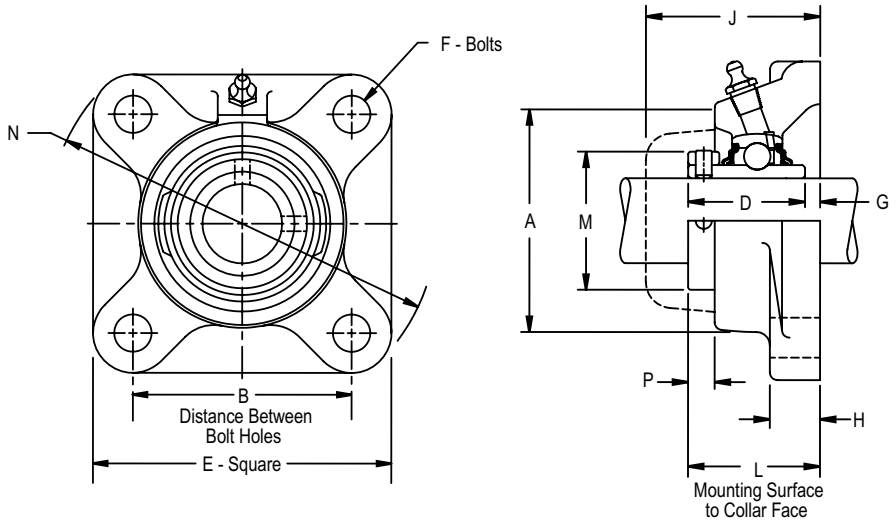

Continued...

Bearing Dimensions

Size Code	Shaft Diameter	Part Number	B Distance Between Bolt Holes	L Mounting Surface to Collar Face	A	D	E	F Bolts	G	H	J	M	N	P	Approx. Weight
213	2 1/2	F3U240N *Δ	5 7/8	2 25/32	5 7/8	2 11/16	7 3/8	5/8	3/32	3/4	3 5/32	4 3/16	9 13/16	5/8	14.40
	2 11/16	F3U243N *Δ													
	65.00	*F3U2M65N *Δ*	*149.22*	*70.60*	*149.20*	*68.26*	*187.30*	*16.00*	*2.40*	*19.00*	*80.20*	*106.40*	*249.20*	*15.90*	*6.50*
215	2 3/4	F3U244N *Δ	6	2 31/32	6 3/8	2 7/8	7 3/4	3/4	3/32	3/4	3 3/8	4 5/8	10 1/4	11/16	17.40
	2 15/16	F3U247N *Δ													
	3	F3U2E48N *Δ													
	75.00	*F3U2M75N *Δ*	*152.40*	*75.40*	*161.90*	*73.02*	*196.80*	*20.00*	*2.40*	*19.00*	*85.70*	*117.50*	*260.40*	*17.50*	*7.85*
217	3 7/16	F3U255N *Δ	6 3/4	3 21/32	7 1/2	3 9/16	8 9/16	3/4	3/32	1	4 1/32	5 3/16	11 3/8	3/4	25.70
	3 1/2	F3U2E56N *Δ													
	85.00	*F3U2M85N *Δ*	*171.45*	*92.90*	*190.50*	*90.49*	*217.50*	*20.00*	*2.40*	*25.40*	*102.40*	*131.80*	*288.90*	*19.00*	*11.55*

Additional Notes

Please call 1-866-REXNORD for availability

Lubrication fitting tap size: for size code 203, 1/4 in-28 UNF: for all other size codes, 1/8 in PT

Size codes 203 to 212 don't have mounting collars

* N lip seals standard

■ Available with H labyrinth seals

Δ Available with E3 triple lip seals

Nickel plated housings available, add suffix K75

For the Selection Guide, Load Ratings and Speed Limits, see the Link-Belt 200 Series Ball Bearing Engineering section on pages 290 - 298.

Note: Dimensions subject to change. Certified dimensions of ordered material furnished on request.

F3W200

Interchange: *F4BSXV, FY-FM, FHF200-G, VF4E100, VCJ*

Photo Shows a 4-Bolt Ball Bearing Flanged Unit

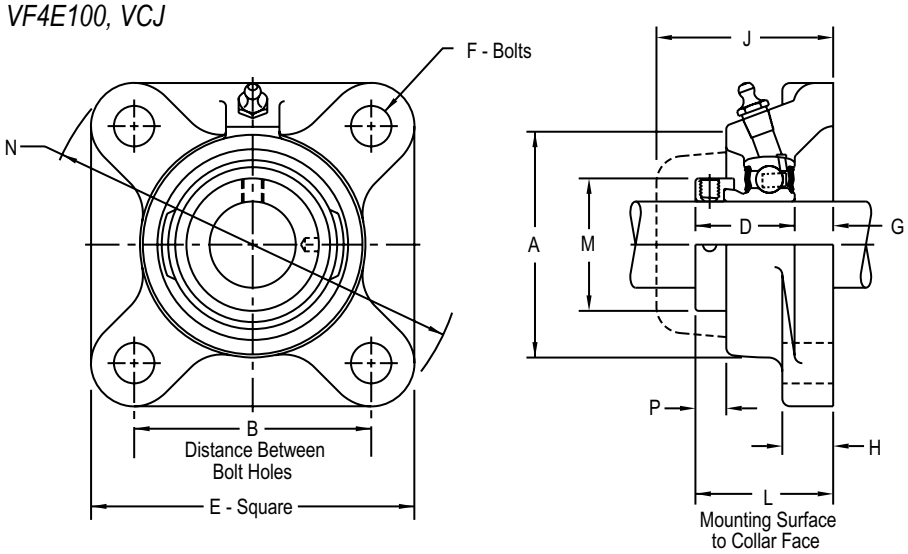

Product Features

Corrosion-resistant powder coating
Cast iron housing
Eccentric cam locking device
Alignable & relubricatable
See Features and Benefits for additional info on pages 286 - 287.

Bearing Dimensions

Size Code	Shaft Diameter	Part Number	B Distance Between Bolt Holes	L Mounting Surface to Collar Face	A	D	E	F Bolts	G	H	J	M	N	P	Approx. Weight
203	1/2	F3W2B08E▲	2 1/8	1 31/64	2 1/8	1 1/8	3	3/8	23/64	1/2	1 25/32	1 1/8	3 7/8	15/32	0.80
	5/8	F3W210E▲													
204	3/4	F3W212E▲	2 1/2	1 21/32	2 7/16	1 7/32	3 3/8	3/8	7/16	9/16	2 1/64	1 5/16	4 13/32	29/64	1.30
205	7/8	F3W214E▲	2 3/4	1 43/64	2 11/16	1 7/32	3 3/4	7/16	29/64	19/32	2	1 1/2	4 29/32	27/64	1.80
	15/16	F3W215E▲													
	1	F3W216E▲													
206	1 1/8	F3W218E▲	3 1/4	1 53/64	3 3/16	1 13/32	4 1/4	7/16	27/64	19/32	2 15/64	1 3/4	5 19/32	33/64	2.90
	1 3/16	F3W219E▲													
	1 1/4	F3W2E20E▲													
207	1 1/4	F3W220E▲	3 5/8	1 31/32	3 5/8	1 17/32	4 5/8	1/2	7/16	5/8	2 23/64	2 3/16	6 1/8	9/16	3.70
	1 3/8	F3W222E▲													
	1 7/16	F3W223E▲													
208	1 1/2	F3W224E▲	4	2 3/16	4	1 23/32	5 1/8	1/2	15/32	5/8	2 35/64	2 3/8	6 25/32	39/64	4.80
209	1 5/8	F3W226E▲	4 1/8	2 3/16	4 1/4	1 23/32	5 3/8	1/2	15/32	5/8	2 9/16	2 1/2	7 3/32	19/32	5.60
	1 11/16	F3W227E▲													
	1 3/4	F3W228E▲													
210	1 15/16	F3W231E▲	4 3/8	2 5/16	4 1/2	1 23/32	5 5/8	1/2	19/32	3/4	2 13/16	2 3/4	7 7/16	37/64	6.10
	2	F3W2E32E▲													

Additional Notes

Please call 1-866-REXNORD for availability
Lubrication fitting tap size: for size code 203, 1/4 in-28 UNF: for all other size codes, 1/8 in PT
▲ E lip seals standard
Nickel plated housings available, add suffix K75

For the Selection Guide, Load Ratings and Speed Limits, see the Link-Belt 200 Series Ball Bearing Engineering section on pages 290 - 298.
Note: Dimensions subject to change. Certified dimensions of ordered material furnished on request.

F3S200

Interchange: *F4BVSC, FY-RM, FHSF200-G, VF4S100, SCJ*

Photo Shows a 4-Bolt Ball Bearing Flanged Unit

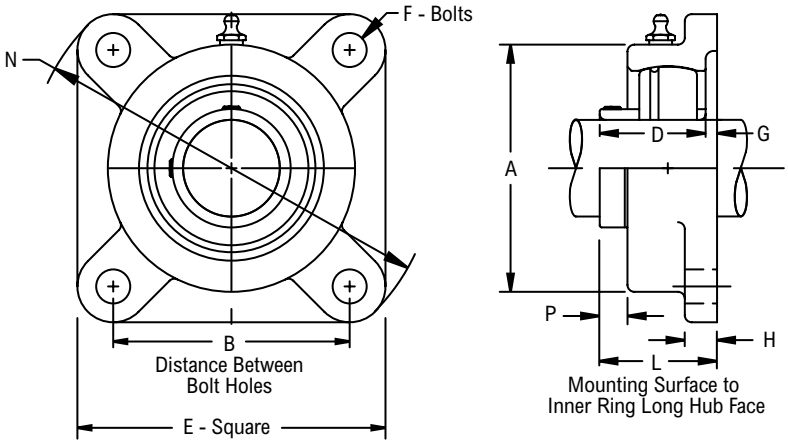

Product Features

- Corrosion-resistant powder coating
- Cast iron housing
- Broad range of sealing options
- Spring locking setscrew mount
- Alignable & relubricatable
- See Features and Benefits for additional info on pages 286 - 287.

Bearing Dimensions

Size Code	Shaft Diameter	Part Number	B Distance Between Bolt Holes	L Mounting Surface to Inner Ring Long Hub Face	A	D	E	F Bolts	G	H	N	P	Approx. Weight
203	1/2	F3S2B08E♦● □Δ	2 1/8	1 1/8	2 1/16	63/64	3	3/8	9/64	3/8	3 7/8	5/16	0.99
	5/8	F3S210E♦● □Δ											0.95
	11/16	F3S211E♦● □Δ											0.93
204	3/4	F3S212E♦● □Δ	2 1/2	1 9/32	2 5/16	1 1/8	3 3/8	3/8	9/64	3/8	4 13/32	13/32	1.30
	20.00	*F3S2M20E♦● □Δ*	*63.50*	*32.20*	*58.70*	*28.58*	*85.70*	*10.00*	*3.60*	*9.50*	*111.90*	*10.30*	*0.60*
205	7/8	F3S214E♦● □Δ	2 3/4	1 5/16	2 11/16	1 11/64	3 3/4	7/16	1/8	7/16	4 29/32	7/16	1.71
	15/16	F3S215E♦● □Δ											1.68
	1	F3S216E♦● □Δ											1.65
	25.00	*F3S2M25E♦● □Δ*	*69.85*	*33.30*	*68.30*	*29.77*	*95.20*	*10.00*	*3.20*	*11.10*	*124.60*	*11.10*	*0.70*
206	1 1/8	F3S218E♦● □Δ	3 1/4	1 1/2	3 3/16	1 11/32	4 1/4	7/16	9/64	1/2	5 19/32	9/16	2.50
	1 3/16	F3S219E♦● □Δ											2.46
	1 1/4	F3S2E20E♦● □Δ											2.42
	30.00	*F3S2M30E♦● □Δ*	*82.55*	*38.10*	*81.00*	*34.14*	*108.00*	*10.00*	*3.60*	*12.70*	*142.10*	*14.30*	*1.10*
207	1 1/4	F3S220E♦● □Δ	3 5/8	1 23/32	3 11/16	1 9/16	4 5/8	1/2	9/64	1/2	6 1/8	21/32	3.41
	1 3/8	F3S222E♦● □Δ											3.31
	1 7/16	F3S223E♦● □Δ											3.26
	35.00	*F3S2M35E♦● □Δ*	*92.08*	*43.70*	*93.70*	*39.67*	*117.50*	*12.00*	*3.60*	*12.70*	*155.60*	*16.70*	*1.50*
208	1 1/2	F3S224E♦● □Δ	4	1 13/16	4 1/16	1 21/32	5 1/4	1/2	5/32	9/16	6 25/32	21/32	4.49
	1 5/8	F3S2E26E♦● □Δ											4.35
	40.00	*F3S2M40E♦● □Δ*	*101.60*	*46.00*	*103.20*	*42.06*	*130.20*	*12.00*	*4.00*	*14.30*	*172.20*	*16.70*	*2.00*
209	1 5/8	F3S226E♦● □Δ	4 1/8	1 29/32	4 5/16	1 49/64	5 3/8	9/16	1/8	9/16	7 3/32	23/32	4.85
	1 11/16	F3S227E♦● □Δ											4.78
	1 3/4	F3S228E♦● □Δ											4.70
210	1 7/8	F3S230E♦● □Δ	4 3/8	1 29/32	4 1/2	1 13/16	5 5/8	9/16	7/64	9/16	7 7/16	23/32	5.31
	1 15/16	F3S231E♦● □Δ											5.22
	2	F3S2E32E♦● □Δ											5.13
211	2	F3S232E♦● □Δ	5 1/8	2	5 3/16	1 13/16	6 3/8	5/8	11/64	5/8	8 1/2	11/16	7.53
	2 3/16	F3S235E♦● □Δ											7.23
	2 1/4	F3S2E36E♦● □Δ											7.13
212	2 1/4	F3S236E♦● □Δ	5 5/8	2 3/32	5 7/16	1 57/64	6 7/8	5/8	13/64	11/16	9 9/32	21/32	9.25
	2 3/8	F3S238E♦● □Δ											9.01
	2 7/16	F3S239E♦● □Δ											8.89
215	2 15/16	F3S247E♦● □Δ	6	2 13/32	6 7/16	2 17/64	7 3/4	3/4	1/8	3/4	10 1/4	23/32	13.19

Additional Notes

Please call 1-866-REXNORD for availability

Lubrication fitting tap size: for size code 203, 1/4 in-28 UNF: for all other size codes, 1/8 in PT

Lip seals standard

♦ Available with E1 viton seals for all size codes

Available with free running style seals, add suffix ● FF, □ HFF or Δ MHFF for all size codes

Nickel plated housings available, add suffix K75

For the Selection Guide, Load Ratings and Speed Limits, see the Link-Belt 200 Series Ball Bearing Engineering section on pages 290 - 298.

Note: Dimensions subject to change. Certified dimensions of ordered material furnished on request.

FB3U200

Interchange: *FBSC, UCFB200, FB*

Photo Shows a 3-Bolt Ball Bearing Flanged Bracket Unit

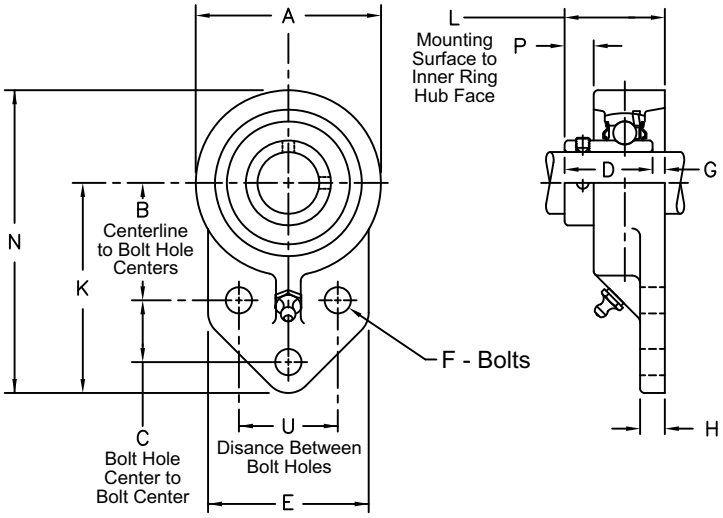

Product Features

- Corrosion-resistant powder coating
- Cast iron housing
- Broad range of sealing options
- Wide inner ring for increased shaft stability
- Spring locking setscrew mount
- Alignable & relubricatable
- See Features and Benefits for additional info on pages 286 - 287.

Bearing Dimensions

Size Code	Shaft Diameter	Part Number	B Centerline to Bolt Hole Centers	C Bolt Hole Center to Bolt Center	L Mounting Surface to Inner Ring Long Hub Face	U Distance Between Bolt Holes	A	D	E	F Bolts	G	H	K	N	P	Approx. Weight
204	3/4	FB3U212N *■	1 11/16	7/8	1 11/32	1 1/2	2 1/2	1 9/32	2 3/8	3/8	1/16	5/16	3	4 1/4	11/32	1.40
	20.00	*FB3U2M20N *■*	*42.90*	*22.20*	*34.10*	*38.10*	*63.50*	*32.50*	*60.30*	*10.00*	*1.60*	*7.90*	*76.20*	*108.00*	*8.70*	*0.63*
205	7/8	FB3U214N *Δ■	1 13/16	1 1/8	1 29/64	1 5/8	2 3/4	1 23/64	2 1/2	3/8	3/32	3/8	3 3/8	4 3/4	19/64	1.90
	15/16	FB3U215N *Δ■														
	1	FB3U216N *Δ■														
	25.00	*FB3U2M25N *Δ■*	*46.00*	*28.60*	*38.90*	*41.30*	*69.80*	*34.53*	*63.50*	*10.00*	*2.40*	*9.50*	*85.70*	*120.60*	*7.50*	*0.86*
206	1 1/8	FB3U218N *Δ■	2 1/16	1 1/4	1 5/8	1 7/8	3 1/4	1 9/16	2 3/4	3/8	1/16	3/8	3 3/4	5 3/8	3/8	2.50
	1 3/16	FB3U219N *Δ■														
	1 1/4	FB3U2E20N *Δ■														
	30.00	*FB3U2M30N *Δ■*	*52.30*	*31.80*	*43.70*	*47.60*	*82.60*	*39.69*	*69.80*	*10.00*	*1.60*	*9.50*	*95.20*	*136.50*	*9.50*	*1.13*
207	1 1/4	FB3U220N *Δ■	2 3/8	1 1/4	1 59/64	2	3 3/4	1 49/64	3 1/4	1/2	5/32	1/2	4 1/4	6 1/8	31/64	3.40
	1 3/8	FB3U222N *Δ■														
	1 7/16	FB3U223N *Δ■														
	35.00	*FB3U2M35N *Δ■*	*60.30*	*31.80*	*48.80*	*50.80*	*95.20*	*44.85*	*82.60*	*12.00*	*4.00*	*12.70*	*108.00*	*155.60*	*12.30*	*1.53*

Additional Notes

Please call 1-866-REXNORD for availability
Lubrication fitting tap size, 1/4 in-28 UNF
* N lip seals standard
■ Available with H labyrinth seals
Δ Available with E3 triple lip seals
Nickel plated housings available, add suffix K75

For the Selection Guide, Load Ratings and Speed Limits, see the Link-Belt 200 Series Ball Bearing Engineering section on pages 290 - 298.

Note: Dimensions subject to change. Certified dimensions of ordered material furnished on request.

FB3S200

Interchange: *FBVSC*

Photo Shows a 3-Bolt Ball Bearing Flanged Bracket Unit

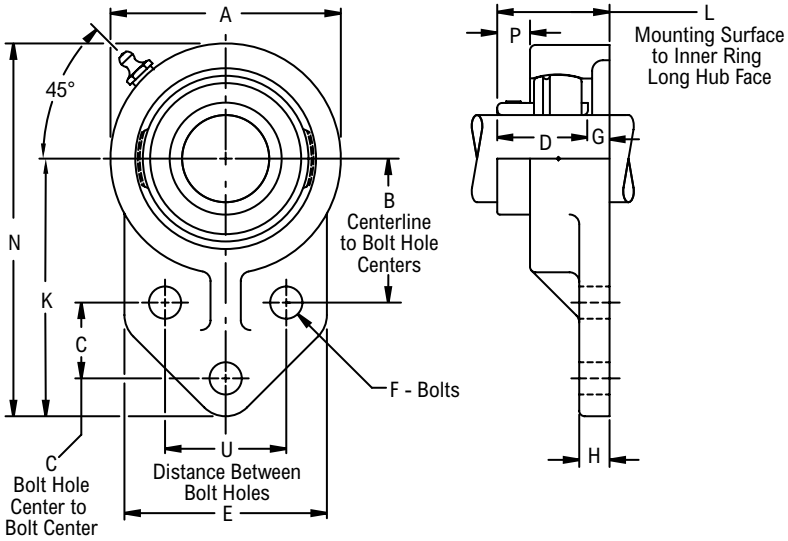

Product Features

- Corrosion-resistant powder coating
- Cast iron housing
- Broad range of sealing options
- Spring locking setscrew mount
- Alignable & relubricatable
- See Features and Benefits for additional info on pages 286 - 287.

Bearing Dimensions

Size Code	Shaft Diameter	Part Number	B Centerline to Bolt Hole Centers	C Bolt Hole Center to Bolt Center	L Mounting Surface to Inner Ring Long Hub Face	U Distance Between Bolt Holes	A	D	E	F Bolts	G	H	K	N	P	Approx. Weight
204	3/4	FB3S212E♦● □Δ	1 11/16	7/8	1 3/8	1 1/2	2 1/2	1 1/8	2 3/8	3/8	1/4	5/16	3	4 1/4	25/64	1.44
	20.00	*FB3S2M20E♦● □Δ*	*42.90*	*22.20*	*34.90*	*38.10*	*63.50*	*28.58*	*60.30*	*10.00*	*6.40*	*7.90*	*76.20*	*108.00*	*9.90*	*0.60*
205	7/8	FB3S214E♦● □Δ	1 13/16	1 1/8	1 17/32	1 5/8	2 3/4	1 11/64	2 1/2	3/8	23/64	3/8	3 3/8	4 3/4	27/64	1.80
	15/16	FB3S215E♦● □Δ														
	1	FB3S216E♦● □Δ														
	25.00	*FB3S2M25E♦● □Δ*	*46.00*	*28.60*	*38.90*	*41.30*	*69.80*	*29.77*	*63.50*	*10.00*	*9.10*	*9.50*	*85.70*	*120.60*	*10.70*	*0.80*
206	1 1/8	FB3S218E♦● □Δ	2 1/16	1 1/4	1 43/64	1 7/8	3 1/4	1 11/32	2 3/4	3/8	17/64	3/8	3 3/4	5 3/8	35/64	2.10
	1 3/16	FB3S219E♦● □Δ														
	1 1/4	FB3S2E20E♦● □Δ														
	30.00	*FB3S2M30E♦● □Δ*	*52.30*	*31.80*	*42.50*	*47.60*	*82.60*	*34.14*	*69.80*	*10.00*	*6.80*	*9.50*	*95.20*	*136.50*	*13.90*	*0.90*
207	1 1/4	FB3S220E♦● □Δ	2 3/8	1 1/4	1 61/64	2	3 3/4	1 9/16	3 11/32	1/2	25/64	1/2	4 1/4	6 1/8	41/64	3.45
	1 3/8	FB3S222E♦● □Δ														
	1 7/16	FB3S223E♦● □Δ														
	35.00	*FB3S2M35E♦● □Δ*	*60.30*	*31.80*	*49.60*	*50.80*	*95.20*	*39.67*	*85.30*	*12.00*	*9.90*	*12.70*	*108.00*	*155.60*	*16.30*	*1.50*

Additional Notes

- Please call 1-866-REXNORD for availability
- Lubrication fitting tap size: for size codes 204 thru 205, 1/4-28 UNF: for all other size codes, 1/8 in PT
- Lip seals standard
- ♦ Available with E1 viton seals
- Available with free running style seals, add suffix ● FF, □ HFF or Δ MHFF
- Nickel plated housings available, add suffix K75
- For the Selection Guide, Load Ratings and Speed Limits, see the Link-Belt 200 Series Ball Bearing Engineering section on pages 290 - 298.
- Note: Dimensions subject to change. Certified dimensions of ordered material furnished on request.

FC3CL200N

Interchange: *FCDL, SFC-T*

Photo Shows a 4-Bolt Ball Bearing Flanged Cartridge Unit

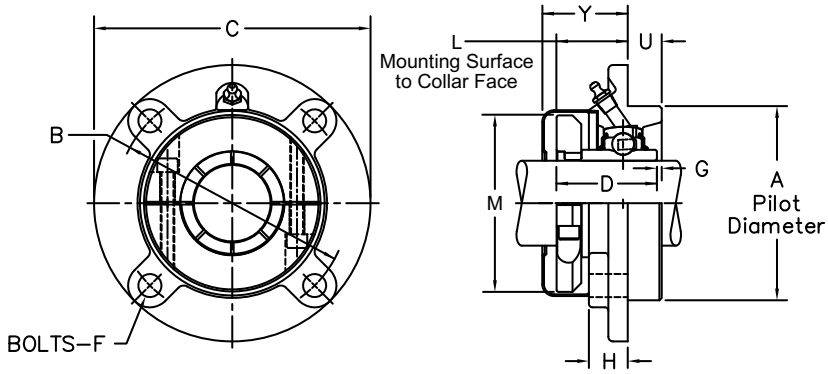

Product Features

- Corrosion resistant powder coating
- Cast iron housing
- Broad range of sealing options
- Wide inner ring for increased shaft stability
- Spring locking setscrew mount
- Alignable and relubricatable
- Black Oxide

Bearing Dimensions

Size Code	Shaft Diameter	Part Number	A Pilot Diameter	B Bolt Hole Circle Diameter	L Mounting Surface to Collar Face	C	D	F Bolts	G	H	M	U	Y	Approx. Weight
205	7/8	FC3CL214N*Δ■	3.000	3 5/8	61/64	4 3/8	1 29/64	3/8	-	5/8	2 3/32	1/2	1 29/64	3.00
	15/16	FC3CL215N*Δ■												
	1	FC3CL216N*Δ■												
	25.00	*FC3CL2M25N*Δ■*	*76.200*	*92.08*	*24.21*	*111.10*	*36.91*	*10.00*	*-*	*15.90*	*53.18*	*12.70*	*36.91*	*1.35*
206	1 1/8	FC3CL218N*Δ■	3.375	4 1/8	1 5/64	5	1 17/32	7/16	-	13/16	2 15/32	27/64	1 3/4	4.50
	1 3/16	FC3CL219N*Δ■												
	1 1/4	FC3CL2E20N*Δ■												
	30.00	*FC3CL2M30N*Δ■*	*85.720*	*104.78*	*27.38*	*127.00*	*38.89*	*10.00*	*-*	*20.60*	*62.71*	*10.70*	*44.45*	*2.00*
207	1 1/4	FC3CL220N*Δ■	3.625	4 3/8	1 13/32	5 1/4	1 47/64	7/16	3/16	1 1/16	2 57/64	15/32	2 1/64	4.60
	1 3/8	FC3CL222N*Δ■												
	1 7/16	FC3CL223N*Δ■												
	35.00	*FC3CL2M35N*Δ■*	*92.080*	*111.20*	*35.72*	*133.40*	*44.05*	*10.00*	*4.80*	*27.00*	*73.42*	*11.90*	*51.20*	*2.10*
208	1 1/2	FC3CL224N*Δ■	3.625	4 3/8	1 33/64	5 1/4	1 31/32	7/16	1/32	1 1/32	3 1/16	15/32	2 1/32	4.30
	40.00	*FC3CL2M40N*Δ■*	*92.080*	*111.12*	*38.50*	*133.40*	*50.01*	*10.00*	*0.80*	*26.20*	*77.79*	*11.90*	*51.59*	*1.95*
209	1 5/8	FC3CL226N*Δ■	4.250	5 1/8	1 17/32	6 1/8	1 31/32	1/2	-	1 1/16	3 17/64	15/32	2 1/32	6.30
	1 11/16	FC3CL227N*Δ■												
	1 3/4	FC3CL228N*Δ■												
	45.00	*FC3CL2M45N*Δ■*	*107.950*	*130.18*	*38.89*	*155.60*	*50.01*	*12.00*	*-*	*27.00*	*82.95*	*11.90*	*51.59*	*2.84*
210	1 15/16	FC3CL231N*Δ■	4.500	5 3/8	1 19/32	6 3/8	2 5/64	1/2	11/64	1 13/64	3 5/8	5/8	2 7/16	7.40
	50.00	*FC3CL2M50N*Δ■*	*114.300*	*136.52*	*40.48*	*161.90*	*52.78*	*12.00*	*4.40*	*30.60*	*92.08*	*15.90*	*61.91*	*3.33*
211A	2	FC4CL232N*Δ■	4.500	5 3/8	1 21/32	6 3/8	2 15/64	1/2	1/32	1 1/32	3 29/32	5/8	2 1/4	7.70
	55.00	*FC4CL2M55N*Δ■*	*114.300*	*136.52*	*42.07*	*161.90*	*56.75*	*12.00*	*0.80*	*26.20*	*99.22*	*15.90*	*57.15*	*3.50*
211B	2	FC3CL232N*Δ■	5.000	6	1 15/32	7 1/8	2 15/64	9/16	5/32	1	3 29/32	7/8	2 1/4	9.90
	2 3/16	FC3CL235N*Δ■												
	55.00	*FC3CL2M55N*Δ■*	*127.000*	*152.40*	*37.31*	*181.00*	*56.75*	*14.00*	*4.00*	*25.40*	*99.22*	*22.20*	*57.15*	*4.45*

Continued...

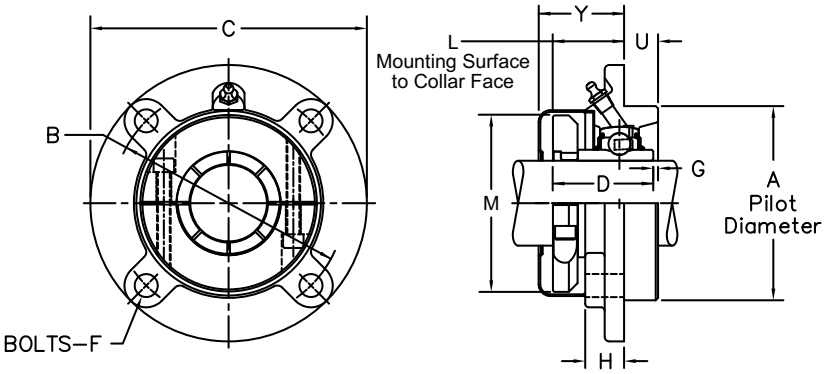

Continued...

Bearing Dimensions

Size Code	Shaft Diameter	Part Number	A Pilot Diameter	B Bolt Hole Circle Diameter	L Mounting Surface to Collar Face	C	D	F Bolts	G	H	M	U	Y	Approx. Weight
212	2 1/4	FC3CL236N*Δ■	5.500	6 1/2	1 39/64	7 5/8	2 19/32	9/16	-	1	4 3/16	7/8	2 1/4	12.00
	2 3/8	FC3CL238N*Δ■												
	2 7/16	FC3CL239N*Δ■												
	60.00	*FC3CL2M60N*Δ■*	*139.700*	*165.10*	*40.88*	*193.70*	*65.88*	*14.00*	*-*	*25.40*	*106.36*	*22.20*	*57.15*	*5.40*
213	2 1/2	FC3CL240N*Δ	6.375	7 1/2	1 7/8	8 3/4	2 3/4	5/8	3/16	1 3/16	4 51/64	1 1/16	2 23/64	17.00
	2 11/16	FC3CL243N*Δ												
	65.00	*FC3CL2M65N*Δ*	*161.920*	*190.50*		*222.20*		*16.00*	*4.80*	*30.20*		*27.00*		*7.65*
215	2 3/4	FC3CL244N*Δ	6.375	7 1/2	1 55/64	8 3/4	2 29/32	5/8	3/16	1 1/16	5 1/4	1 1/4	2 23/64	17.70
	2 15/16	FC3CL247N*Δ												
	3	FC3CL2E48N*Δ												
	75.00	*FC3CL2M75N*Δ*	*161.920*	*190.50*		*222.20*		*16.00*	*4.80*	*27.00*		*31.80*		*8.00*
217	3 7/16	FC3CL255N*Δ	7.375	8 5/8	2 7/16	10 1/4	3 39/64	3/4	-	1 5/8	5 23/32	1 5/32	3 1/8	34.00
	3 1/2	FC3CL2E56N*Δ												
	85.00	*FC3CL2M85N*Δ*	*187.320*	*219.08*		*260.40*		*20.00*	*-*	*41.30*		*29.40*		*15.30*
220	3 15/16	FC3CL263N*	8.120	9 3/8	3 11/16	10 7/8	4 7/64	3/4	-	2 1/8	6 31/64	1 1/8	3 27/64	41.80
	4	FC3CL2E64N*												
	100.00	*FC3CL2M100N**	206.250	*238.12*		*276.20*		*20.00*	*-*	*54.00*		*28.60*		*18.80*

Additional Notes

Please call 1-866-REXNORD for availability

Lubrication fitting tap size: for size code 203, 1/4 in-28 UNF: for all other size codes, 1/8 in PT

* N lip seals with flingers standard

■ Available with H labyrinth seals

Δ Available with E3 triple lip seals

Nickel plated housings available, add suffix K75

For the Selection Guide, Load Ratings and Speed Limits, see the Link-Belt 200 Series Ball Bearing Engineering section on pages 290 - 298.

Note: Dimensions subject to change. Certified dimensions of ordered material furnished on request.

FC3Y200

Interchange: *FCSXR*

Photo Shows a 4-Bolt Ball Bearing Flanged Cartridge Unit

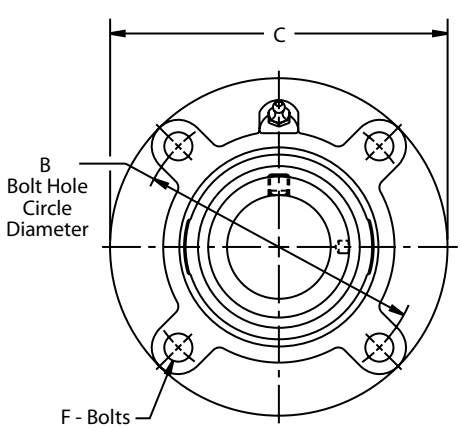

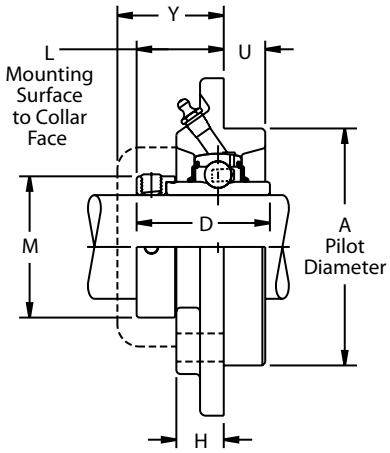

Product Features

- Corrosion-resistant powder coating
- Cast iron housing
- Broad range of sealing options
- Wide inner ring for increased shaft stability
- Eccentric cam locking device
- Alignable & relubricatable
- See Features and Benefits for additional info on pages 286 - 287.

Bearing Dimensions

Size Code	Shaft Diameter	Part Number	A Pilot Diameter	B Bolt Hole Circle Diameter	L Mounting Surface to Collar Face	C	D	F Bolts	H	M	U	Y	Approx. Weight
205	7/8	FC3Y214N *Δ■	3.000	3 5/8	1 1/8	4 3/8	1 3/4	3/8	5/8	1 1/2	1/2	1 7/16	3.10
	15/16	FC3Y215N *Δ■											
	1	FC3Y216N *Δ■											
206	1 1/8	FC3Y218N *Δ■	3.375	4 1/8	1 3/8	5	1 29/32	7/16	13/16	1 3/4	27/64	1 23/32	4.60
	1 3/16	FC3Y219N *Δ■											
	1 1/4	FC3Y2E20N *Δ■											
207	1 1/4	FC3Y220N *Δ■	3.625	4 3/8	1 21/32	5 1/4	2 1/64	7/16	1 1/16	2 3/16	15/32	2	4.90
	1 3/8	FC3Y222N *Δ■											
	1 7/16	FC3Y223N *Δ■											
208	1 1/2	FC3Y224N *Δ■	3.625	4 3/8	1 43/64	5 1/4	2 7/32	7/16	1 1/32	2 3/8	15/32	2 1/16	4.60
209	1 5/8	FC3Y226N *Δ■	4.250	5 1/8	1 45/64	6 1/8	2 7/32	1/2	1 1/16	2 1/2	15/32	2 5/64	6.60
	1 11/16	FC3Y227N *Δ■											
	1 3/4	FC3Y228N *Δ■											
210	1 15/16	FC3Y231N *Δ■	4.500	5 3/8	1 7/8	6 3/8	2 15/32	1/2	1 13/64	2 3/4	5/8	2 1/4	7.70
211A	2	FC4Y232N *Δ■	4.500	5 3/8	1 31/32	6 3/8	2 13/16	1/2	1 1/32	3	5/8	2 17/64	7.20
211B	2	FC3Y232N *Δ■	5.000	6	1 27/32	7 1/8	2 13/16	9/16	1	3	7/8	2 1/8	11.00
	2 3/16	FC3Y235N *Δ■											
212	2 1/4	FC3Y236N *Δ■	5.500	6 1/2	1 29/32	7 5/8	3 1/16	9/16	1	3 5/16	7/8	2 11/64	12.50
	2 3/8	FC3Y238N *Δ■											
	2 7/16	FC3Y239N *Δ■											

Additional Notes

- Please call 1-866-REXNORD for availability
- Lubrication fitting tap size: for size codes 206 and below, 1/4 in-28 UNF: for all other size codes, 1/8 in PT
- Pilot Diameter tolerance, +.000 in/-.002 in *(+0.00 mm/-0.05 mm)*
- Bore tolerance for mounting, +.002 in/-.000 in *(+0.05 mm/-0.00 mm)*
- * N lip seals standard
- ■ Available with H labyrinth seals
- Δ Available with E3 triple lip seals
- For the Selection Guide, Load Ratings and Speed Limits, see the Link-Belt 200 Series Ball Bearing Engineering section on pages 290 - 298.
- Note: Dimensions subject to change. Certified dimensions of ordered material furnished on request.

FC3U200

Interchange: *FCSC, SFC, RFC*

Photo Shows a 4-Bolt Ball Bearing Flanged Cartridge Unit

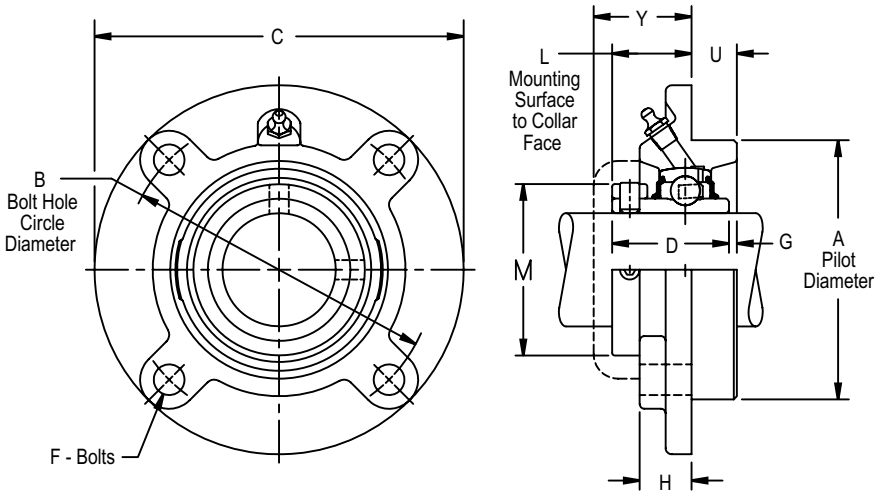

Product Features

- Corrosion-resistant powder coating
- Cast iron housing
- Broad range of sealing options
- Wide inner ring for increased shaft stability
- Spring locking setscrew mount
- Alignable & relubricatable
- See Features and Benefits for additional info on pages 286 - 287.

Bearing Dimensions

Size Code	Shaft Diameter	Part Number	A Pilot Diameter	B Bolt Hole Circle Diameter	L Mounting Surface to Collar Face	C	D	F Bolts	G	H	M	U	Y	Approx. Weight
205	7/8	FC3U214N*Δ■	3.000	3 5/8	55/64	4 3/8	1 23/64	3/8	-	5/8	-	1/2	1 7/16	3.00
	15/16	FC3U215N*Δ■												
	1	FC3U216N*Δ■												
	25.00	*FC3U2M25N*Δ■*	*76.200*	*92.08*	*21.80*	*111.10*	*34.53*	*10.00*	*-*	*15.90*	*-*	*12.70*	*36.50*	*1.35*
206	1 1/8	FC3U218N*Δ■	3.375	4 1/8	1 9/64	5	1 9/16	7/16	-	13/16	-	27/64	1 23/32	4.50
	1 3/16	FC3U219N*Δ■												
	1 1/4	FC3U2E20N*Δ■												
	30.00	*FC3U2M30N*Δ■*	*85.720*	*104.78*	*29.00*	*127.00*	*39.69*	*10.00*	*-*	*20.60*	*-*	*10.70*	*43.70*	*2.00*
207	1 1/4	FC3U220N*Δ■	3.625	4 3/8	1 31/64	5 1/4	1 49/64	7/16	3/16	1 1/16	-	15/32	2	4.60
	1 3/8	FC3U222N*Δ■												
	1 7/16	FC3U223N*Δ■												
	35.00	*FC3U2M35N*Δ■*	*92.080*	*111.20*	*37.70*	*133.40*	*44.85*	*10.00*	*4.80*	*27.00*	*-*	*11.90*	*50.80*	*2.10*
208	1 1/2	FC3U224N*Δ■	3.625	4 3/8	1 15/32	5 1/4	1 29/32	7/16	1/32	1 1/32	-	15/32	2 1/16	4.30
	40.00	*FC3U2M40N*Δ■*	*92.080*	*111.12*	*37.30*	*133.40*	*48.42*	*10.00*	*0.80*	*26.20*	*-*	*11.90*	*52.40*	*1.95*
209	1 5/8	FC3U226N*Δ■	4.250	5 1/8	1 9/16	6 1/8	2 1/32	1/2	-	1 1/16	-	15/32	2 5/64	6.30
	1 11/16	FC3U227N*Δ■												
	1 3/4	FC3U228N*Δ■												
	45.00	*FC3U2M45N*Δ■*	*107.950*	*130.18*	*39.70*	*155.60*	*51.59*	*12.00*	*-*	*27.00*	*-*	*11.90*	*52.80*	*2.84*
210	1 15/16	FC3U231N*Δ■	4.500	5 3/8	1 41/64	6 3/8	2 3/32	1/2	11/64	1 13/64	-	5/8	2 1/4	7.40
	50.00	*FC3U2M50N*Δ■*	*114.300*	*136.52*	*41.70*	*161.90*	*53.18*	*12.00*	*4.40*	*30.60*	*-*	*15.90*	*57.20*	*3.33*
211A	2	FC4U232N*Δ■	4.500	5 3/8	1 21/32	6 3/8	2 1/4	1/2	1/32	1 1/32	-	5/8	2 17/64	7.70
	55.00	*FC4U2M55N*Δ■*	*114.300*	*136.52*	*42.10*	*161.90*	*57.15*	*12.00*	*0.80*	*26.20*	*-*	*15.90*	*57.50*	*3.50*
211B	2	FC3U232N*Δ■	5.000	6	1 17/32	7 1/8	2 1/4	9/16	5/32	1	-	7/8	2 1/8	9.90
	2 3/16	FC3U235N*Δ■												
	55.00	*FC3U2M55N*Δ■*	*127.000*	*152.40*	*38.90*	*181.00*	*57.15*	*14.00*	*4.00*	*25.40*	*-*	*22.20*	*54.00*	*4.45*
212	2 1/4	FC3U236N*Δ■	5.500	6 1/2	1 5/8	7 5/8	2 1/2	9/16	-	1	-	7/8	2 11/64	12.00
	2 3/8	FC3U238N*Δ■												
	2 7/16	FC3U239N*Δ■												
	60.00	*FC3U2M60N*Δ■*	*139.700*	*165.10*	*41.30*	*193.70*	*63.50*	*14.00*	*-*	*25.40*	*-*	*22.20*	*55.20*	*5.40*
213	2 1/2	FC3U240N*Δ	6.375	7 1/2	1 13/16	8 3/4	2 11/16	5/8	3/16	1 3/16	4 3/16	1 1/16	2 3/16	17.00
	2 11/16	FC3U243N*Δ												
	65.00	*FC3U2M65N*Δ*	*161.920*	*190.50*	*46.00*	*222.20*	*68.26*	*16.00*	*4.80*	*30.20*	*106.40*	*27.00*	*55.60*	*7.65*
215	2 3/4	FC3U244N*Δ	6.375	7 1/2	1 13/16	8 3/4	2 7/8	5/8	3/16	1 1/16	4 5/8	1 1/4	2 7/32	17.70
	2 15/16	FC3U247N*Δ												

Continued...

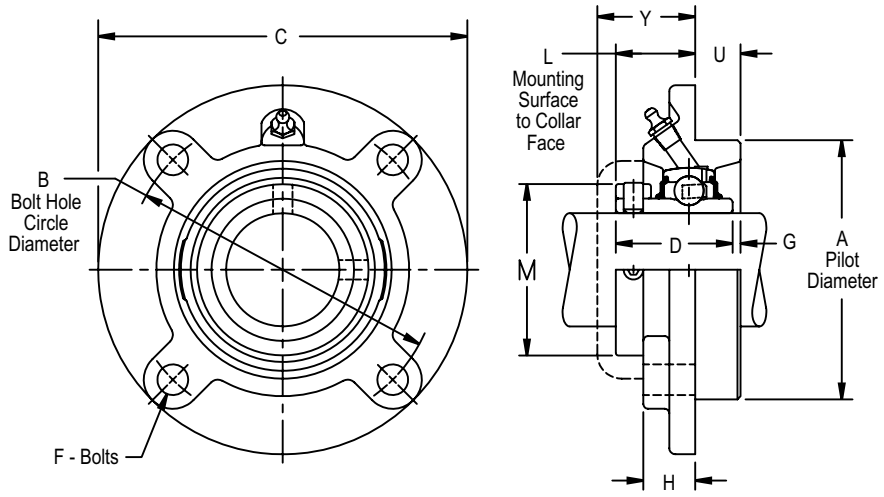

Continued...

Bearing Dimensions

Size Code	Shaft Diameter	Part Number	A Pilot Diameter	B Bolt Hole Circle Diameter	L Mounting Surface to Collar Face	C	D	F Bolts	G	H	M	U	Y	Approx. Weight
215	3	FC3U2E48N*Δ	6.375	7 1/2	1 13/16	8 3/4	2 7/8	5/8	3/16	1 1/16	4 5/8	1 1/4	2 7/32	17.70
	75.00	*FC3U2M75N*Δ*	*161.920*	*190.50*	*46.00*	*222.20*	*73.02*	*16.00*	*4.80*	*27.00*	*117.50*	*31.80*	*56.40*	*8.00*
217	3 7/16	FC3U255N*Δ	7.375	8 5/8	2 13/32	10 1/4	3 9/16	3/4	-	1 5/8	5 3/16	1 5/32	2 25/32	34.00
	3 1/2	FC3U2E56N*Δ												
	85.00	*FC3U2M85N*Δ*	*187.320*	*219.08*	*61.10*	*260.40*	*90.49*	*20.00*	*-*	*41.30*	*131.80*	*29.40*	*70.60*	*15.30*
220	3 15/16	FC3U263N*	8.120	9 3/8	3 1/8	10 7/8	4 1/4	3/4	-	2 1/8	5 15/16	1 1/8	3 9/16	41.80
	4	FC3U2E64N*												
	100.00	*FC3U2M100N**	206.250	*238.12*	*79.40*	*276.20*	*107.95*	*20.00*	*-*	*54.00*	*150.80*	*28.60*	*90.50*	*18.80*

Additional Notes

Please call 1-866-REXNORD for availability

Lubrication fitting tap size: for size codes 206 and below, 1/4 in-28 UNF: for all other size codes, 1/8 in PT

Pilot Diameter tolerance, +.000 in/-.002 in *(+0.00 mm/-0.05 mm)*

Bore tolerance for mounting, +.002 in/-.000 in *(+0.05 mm/-0.00 mm)*

Size codes 203 to 212 don't have mounting collars

* N lip seals standard

■ Available with H labyrinth seals

Δ Available with E3 triple lip seals

For the Selection Guide, Load Ratings and Speed Limits, see the Link-Belt 200 Series Ball Bearing Engineering section on pages 290 - 298.

Note: Dimensions subject to change. Certified dimensions of ordered material furnished on request.

FC3S200

Interchange: *FCVSC*

Photo Shows a 4-Bolt Ball Bearing Flanged Cartridge Unit

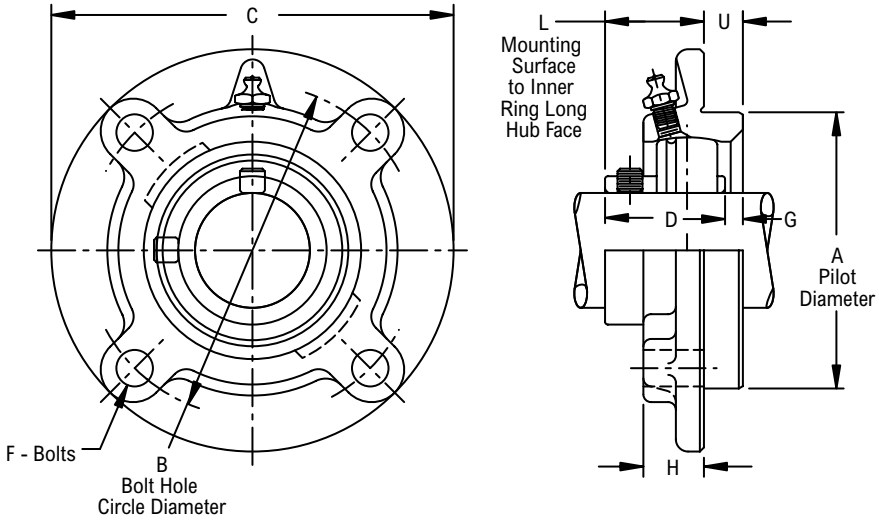

Product Features

- Corrosion-resistant powder coating
- Cast iron housing
- Broad range of sealing options
- Spring locking setscrew mount
- Alignable & relubricatable
- See Features and Benefits for additional info on pages 286 - 287.

Bearing Dimensions

Size Code	Shaft Diameter	Part Number	A Pilot Diameter	B Bolt Hole Circle Diameter	L Mounting Surface to Inner Ring Long Hub Face	C	D	F Bolts	G	H	U	Approx. Weight
207	1 1/4	FC3S220E♦● □Δ	3.375	4 1/8	1 33/64	5	1 9/16	7/16	17/64	7/8	3/8	3.13
	1 3/8	FC3S222E♦● □Δ										3.03
	1 7/16	FC3S223E♦● □Δ										2.97
	35.00	*FC3S2M35E♦● □Δ*	*85.720*	*104.78*	*38.50*	*127.00*	*39.67*	*10.00*	*6.80*	*22.20*	*9.50*	*1.40*
208	1 1/2	FC3S224E♦● □Δ	3.625	4 3/8	1 17/32	5 1/4	1 21/32	7/16	1/4	7/8	7/16	3.63
	1 5/8	FC3S2E26E♦● □Δ										3.49
	40.00	*FC3S2M40E♦● □Δ*	*92.080*	*111.12*	*38.90*	*133.40*	*42.06*	*10.00*	*6.40*	*22.20*	*11.10*	*1.60*
209	1 5/8	FC3S226E♦● □Δ	3.625	4 3/8	1 37/64	5 1/4	1 49/64	7/16	3/16	7/8	7/16	3.76
	1 11/16	FC3S227E♦● □Δ										3.66
	1 3/4	FC3S228E♦● □Δ										3.59
210	1 7/8	FC3S230E♦● □Δ	4.250	5 1/8	1 19/32	6 1/8	1 13/16	1/2	13/64	7/8	15/32	4.97
	1 15/16	FC3S231E♦● □Δ										4.88
	2	FC3S2E32E♦● □Δ										4.79
211	2	FC3S232E♦● □Δ	4.500	5 3/8	1 35/64	6 3/8	1 13/16	1/2	19/64	7/8	5/8	5.87
	2 3/16	FC3S235E♦● □Δ										5.57
	2 1/4	FC3S2E36E♦● □Δ										5.47
212	2 1/4	FC3S236E♦● □Δ	5.000	6	1 11/16	7 1/8	1 57/64	9/16	37/64	1	7/8	8.40
	2 3/8	FC3S238E♦● □Δ										8.16
	2 7/16	FC3S239E♦● □Δ										8.04
215	2 15/16	FC3S247E♦● □Δ	6.375	7 1/2	1 23/32	8 3/4	2 17/64	5/8	25/64	1	1	13.44

Additional Notes

- Please call 1-866-REXNORD for availability
- Lubrication fitting tap size, 1/8 in PT
- Pilot Diameter tolerance, +.000 in/-.002 in *(+0.00 mm/-0.05 mm)*
- Bore tolerance for mounting, +.002 in/-.000 in *(+0.05 mm/-0.00 mm)*
- Lip seals standard
- ♦ Available with E1 viton seals for all size codes
- Available with free running style seals, add suffix ● FF, □ HFF or Δ MHFF for all size codes
- For the Selection Guide, Load Ratings and Speed Limits, see the Link-Belt 200 Series Ball Bearing Engineering section on pages 290 - 298.
- Note: Dimensions subject to change. Certified dimensions of ordered material furnished on request.

FXY200, FXYG200

Photo Shows a 2-Bolt Ball Bearing Flanged Unit with High Test Iron Housing

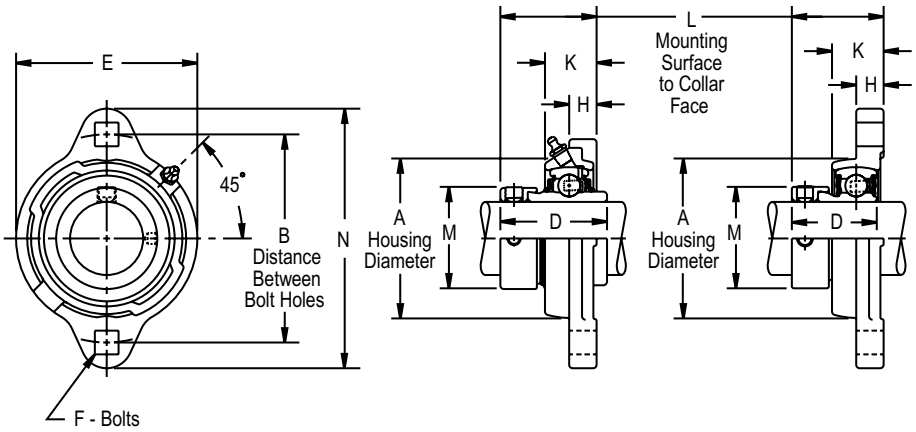

Product Features

- Corrosion-resistant powder coating
- High test iron housing
- Broad range of sealing options
- Wide inner ring for increased shaft stability
- Eccentric cam locking device
- Alignable & optional relubrication feature
- 2-bolt carriage outboard mounting
- See Features and Benefits for additional info on pages 286 - 287.

Bearing Dimensions

Size Code	Shaft Diameter	Non-Relubricatable Part Number	Non-Relubricatable E	Relubricatable Part Number	Relubricatable E	A Housing Diameter	B Distance Between Bolt Holes	L Mounting Surface to Collar Face	D	F Bolts	H	K	M	N	Approx. Weight
203	1/2	FXY2B08N *■	2 3/16	FXYG2B08N *■	2 3/32	1 25/32	2 1/2	1 19/64	1 15/32	1/4	3/8	45/64	1 1/8	3 3/16	0.60
	5/8	FXY210N *■		FXYG210N *■											
	11/16	FXY211N *■		FXYG211N *■											
204	3/4	FXY212N *■	2 15/32	FXYG212N *■	2 3/8	2 1/16	2 13/16	1 15/32	1 23/32	5/16	27/64	25/32	1 5/16	3 9/16	0.80
205	7/8	FXY214N *Δ■	2 23/32	FXYG214N *Δ■	2 5/8	2 9/32	3	1 31/64	1 3/4	5/16	27/64	25/32	1 1/2	3 3/4	1.00
	15/16	FXY215N *Δ■		FXYG215N *Δ■											
	1	FXY216N *Δ■		FXYG216N *Δ■											
206	1 1/8	FXY218N *Δ■	3 3/32	FXYG218N *Δ■	3 3/32	2 23/32	3 9/16	1 21/32	1 29/32	3/8	15/32	57/64	1 3/4	4 7/16	1.40
	1 3/16	FXY219N *Δ■		FXYG219N *Δ■											
	1 1/4	FXY2E20N *Δ■		FXYG2E20N *Δ■											
207	1 1/4	FXY220N *Δ■	3 1/2	FXYG220N *Δ■	3 1/2	3 1/8	3 15/16	1 25/32	2 1/64	3/8	1/2	15/16	2 3/16	4 13/16	2.00
	1 3/8	FXY222N *Δ■		FXYG222N *Δ■											
	1 7/16	FXY223N *Δ■		FXYG223N *Δ■											

Additional Notes

Please call 1-866-REXNORD for availability

Lubrication fitting tap size: for size codes 204 and below, 10-32 UNF: for all other size codes, 1/4 in-28 UNF

Loading slots are on mounting face side for non-relubricatable units

* N lip seals standard

■ Available with H labyrinth seals

Δ Available with E3 triple lip seals

For the Selection Guide, Load Ratings and Speed Limits, see the Link-Belt 200 Series Ball Bearing Engineering section on pages 290 - 298.

Note: Dimensions subject to change. Certified dimensions of ordered material furnished on request.

FXU200, FXUG200

Photo Shows a 2-Bolt Ball Bearing Flanged Unit with High Test Iron Housing

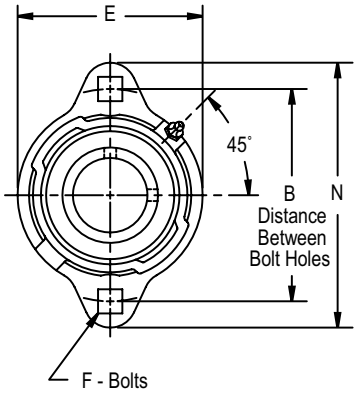

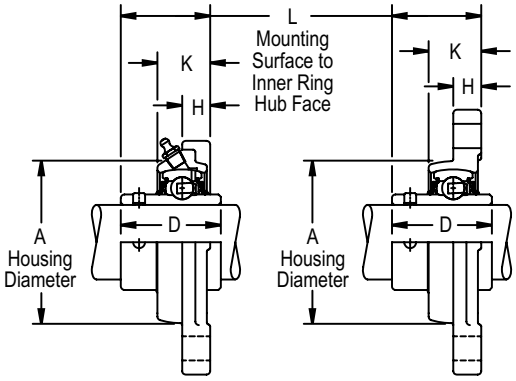

Product Features

- Corrosion-resistant powder coating
- High test iron housing
- Broad range of sealing options
- Wide inner ring for increased shaft stability
- Spring locking setscrew mount
- Alignable & optional relubrication feature
- 2-bolt carriage outboard mounting
- See Features and Benefits for additional info on pages 286 - 287.

Bearing Dimensions

Size Code	Shaft Diameter	Non-Relubricatable Part Number	Non-Relubricatable E	Relubricatable Part Number	Relubricatable E	A Housing Diameter	B Distance Between Bolt Holes	L Mounting Surface to Inner Ring Hub Face	D	F Bolts	H	K	N	Approx. Weight
203	1/2	FXU2B08N*■	2 3/16	FXUG2B08N*■	2 3/32	1 25/32	2 1/2	1 1/64	1 3/32	1/4	3/8	45/64	3 3/16	0.60
	5/8	FXU210N*■		FXUG210N*■										
	11/16	FXU211N*■		FXUG211N*■										
204	3/4	FXU212N*■	2 15/32	FXUG212N*■	2 3/8	2 1/16	2 13/16	1 11/64	1 9/32	5/16	27/64	25/32	3 9/16	0.80
205	7/8	FXU214N*Δ■	2 23/32	FXUG214N*Δ■	2 5/8	2 9/32	3	1 7/32	1 23/64	5/16	27/64	25/32	3 3/4	1.00
	15/16	FXU215N*Δ■		FXUG215N*Δ■										
	1	FXU216N*Δ■		FXUG216N*Δ■										
206	1 1/8	FXU218N*Δ■	3 3/32	FXUG218N*Δ■	3 3/32	2 23/32	3 9/16	1 27/64	1 9/16	3/8	15/32	57/64	4 7/16	1.40
	1 3/16	FXU219N*Δ■		FXUG219N*Δ■										
	1 1/4	FXU2E20N*Δ■		FXUG2E20N*Δ■										
207	1 1/4	FXU220N*Δ■	3 1/2	FXUG220N*Δ■	3 1/2	3 1/8	3 15/16	1 39/64	1 49/64	3/8	1/2	15/16	4 13/16	2.00
	1 3/8	FXU222N*Δ■		FXUG222N*Δ■										
	1 7/16	FXU223N*Δ■		FXUG223N*Δ■										

Additional Notes

Please call 1-866-REXNORD for availability

Lubrication fitting tap size: for size codes 204 and below, 10-32 UNF: for all other size codes, 1/4 in-28 UNF

Loading slots are on mounting face side for non-relubricatable units

* N lip seals standard

■ Available with H labyrinth seals

Δ Available with E3 triple lip seals

For the Selection Guide, Load Ratings and Speed Limits, see the Link-Belt 200 Series Ball Bearing Engineering section on pages 290 - 298.

Note: Dimensions subject to change. Certified dimensions of ordered material furnished on request.

FXW200, FXWG200

Photo Shows a 2-Bolt Ball Bearing Flanged Unit with High Test Iron Housing

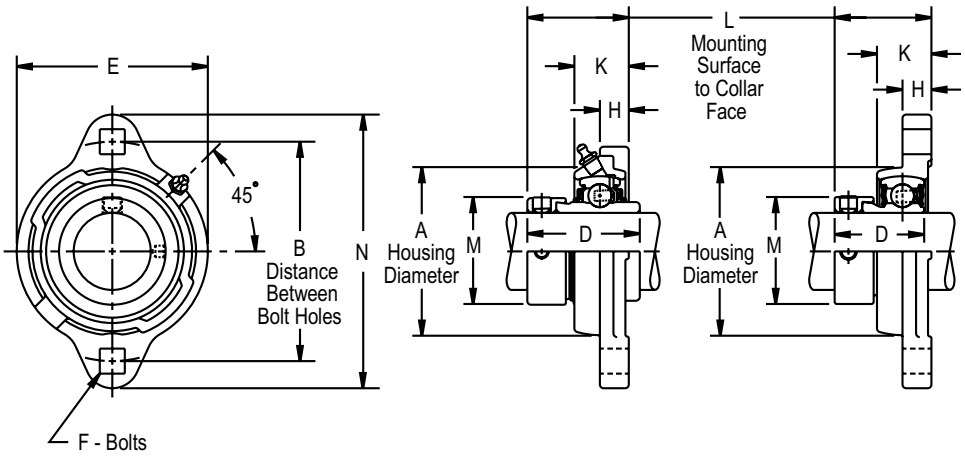

Product Features

- Corrosion-resistant powder coating
- High test iron housing
- Eccentric cam locking device
- Alignable & optional relubrication feature
- 2-bolt carriage outboard mounting
- See Features and Benefits for additional info on pages 286 - 287.

Bearing Dimensions

Size Code	Shaft Diameter	Non-Relubricatable Part Number	Non-Relubricatable E	Relubricatable Part Number	Relubricatable E	A Housing Diameter	B Distance Between Bolt Holes	L Mounting Surface to Collar Face	D	F Bolts	H	K	M	N	Approx. Weight
203	1/2	FXW2B08E▲	2 3/16	FXWG2B08E▲	2 3/32	1 25/32	2 1/2	1 1/4	1 1/8	1/4	3/8	45/64	1 1/8	3 3/16	0.50
	5/8	FXW210E▲		FXWG210E▲											
204	3/4	FXW212E▲	2 15/32	FXWG212E▲	2 3/8	2 1/16	2 13/16	1 11/32	1 7/32	5/16	27/64	25/32	1 5/16	3 9/16	0.70
205	7/8	FXW214E▲	2 23/32	FXWG214E▲	2 5/8	2 9/32	3	1 11/32	1 7/32	5/16	27/64	25/32	1 1/2	3 3/4	0.80
	15/16	FXW215E▲		FXWG215E▲											
	1	FXW216E▲		FXWG216E▲											
206	1 1/8	FXW218E▲	3 3/32	FXWG218E▲	3 3/32	2 23/32	3 9/16	1 17/32	1 13/32	3/8	15/32	57/64	1 3/4	4 7/16	1.20
	1 3/16	FXW219E▲		FXWG219E▲											
	1 1/4	FXW2E20E▲		FXWG2E20E▲											
207	1 1/4	FXW220E▲	3 1/2	FXWG220E▲	3 1/2	3 1/8	3 15/16	1 21/32	1 17/32	3/8	1/2	15/16	2 3/16	4 13/16	1.80
	1 3/8	FXW222E▲		FXWG222E▲											
	1 7/16	FXW223E▲		FXWG223E▲											

Additional Notes

Please call 1-866-REXNORD for availability

Lubrication fitting tap size: for size codes 204 and below, 10-32 UNF: for all other size codes, 1/4 in-28 UNF

Loading slots are on mounting face side for non-relubricatable units

▲ E lip seals standard

For the Selection Guide, Load Ratings and Speed Limits, see the Link-Belt 200 Series Ball Bearing Engineering section on pages 290 - 298.

Note: Dimensions subject to change. Certified dimensions of ordered material furnished on request.

FXRY200, FXRYG200

Photo Shows a 2-Bolt Ball Bearing Flanged Unit with High Test Iron Housing

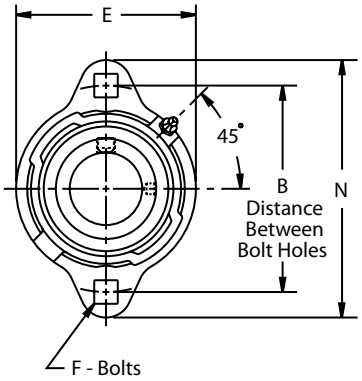

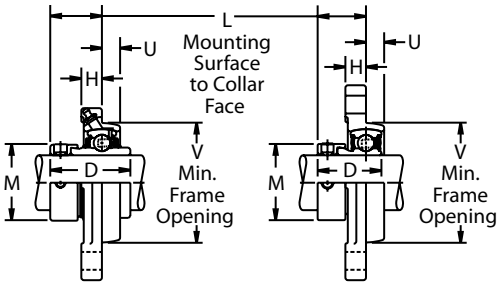

Product Features

- Corrosion-resistant powder coating
- High test iron housing
- Broad range of sealing options
- Wide inner ring for increased shaft stability
- Eccentric cam locking device
- Alignable & optional relubrication feature
- 2-bolt carriage inboard mounting
- See Features and Benefits for additional info on pages 286 - 287.

Bearing Dimensions

Size Code	Shaft Diameter	Non-Relubricatable Part Number	Relubricatable Part Number	B Distance Between Bolt Holes	L Mounting Surface to Collar Face	V Frame Opening	D	E	F Bolts	H	M	N	U	Approx. Weight
203	1/2	FXRY2B08N*■	FXRYG2B08N*■	2 1/2	59/64	1 7/8	1 15/32	2 3/16	1/4	3/8	1 1/8	3 3/16	21/64	0.60
	5/8	FXRY210N*■	FXRYG210N*■											
	11/16	FXRY211N*■	FXRYG211N*■											
204	3/4	FXRY212N*■	FXRYG212N*■	2 13/16	1 3/64	2 5/32	1 23/32	2 15/32	5/16	27/64	1 5/16	3 9/16	23/64	0.80
205	7/8	FXRY214N*Δ■	FXRYG214N*Δ■	3	1 1/16	2 3/8	1 3/4	2 23/32	5/16	27/64	1 1/2	3 3/4	23/64	1.00
	15/16	FXRY215N*Δ■	FXRYG215N*Δ■											
	1	FXRY216N*Δ■	FXRYG216N*Δ■											
206	1 1/8	FXRY218N*Δ■	FXRYG218N*Δ■	3 9/16	1 3/16	2 13/16	1 29/32	3 3/32	3/8	15/32	1 3/4	4 7/16	27/64	1.40
	1 3/16	FXRY219N*Δ■	FXRYG219N*Δ■											
	1 1/4	FXRY2E20N*Δ■	FXRYG2E20N*Δ■											
207	1 1/4	FXRY220N*Δ■	FXRYG220N*Δ■	3 15/16	1 9/32	3 7/32	2 1/64	3 1/2	3/8	1/2	2 3/16	4 13/16	7/16	2.00
	1 3/8	FXRY222N*Δ■	FXRYG222N*Δ■											
	1 7/16	FXRY223N*Δ■	FXRYG223N*Δ■											

Additional Notes

Please call 1-866-REXNORD for availability

Lubrication fitting tap size: for size codes 204 and below, 10-32 UNF: for all other size codes, 1/4 in-28 UNF

Short shank square neck carriage bolt is not recommended

* N lip seals standard

■ Available with H labyrinth seals

Δ Available with E3 triple lip seals

For the Selection Guide, Load Ratings and Speed Limits, see the Link-Belt 200 Series Ball Bearing Engineering section on pages 290 - 298.

Note: Dimensions subject to change. Certified dimensions of ordered material furnished on request.

FXRU200, FXRUG200

Photo Shows a 2-Bolt Ball Bearing Flanged Unit with High Test Iron Housing

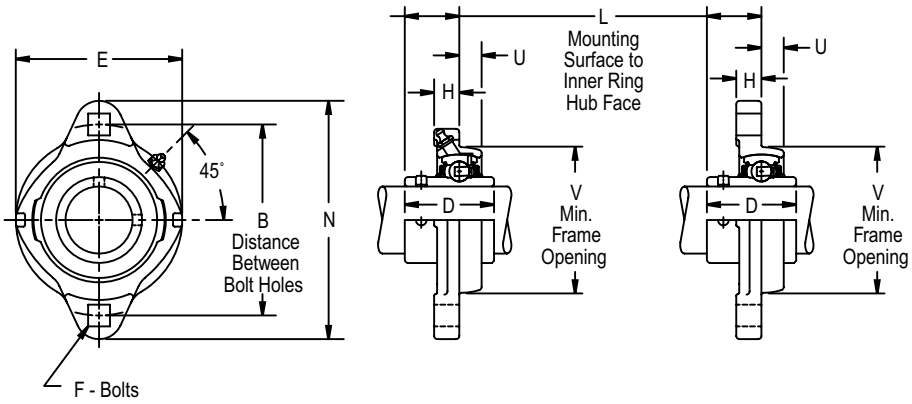

Product Features

- Corrosion-resistant powder coating
- High test iron housing
- Broad range of sealing options
- Wide inner ring for increased shaft stability
- Spring locking setscrew mount
- Alignable & optional relubrication feature
- 2-bolt carriage inboard mounting
- See Features and Benefits for additional info on pages 286 - 287.

Bearing Dimensions

Size Code	Shaft Diameter	Non-Relubricatable Part Number	Relubricatable Part Number	B Distance Between Bolt Holes	L Mounting Surface to Inner Ring Hub Face	V Frame Opening	D	E	F Bolts	H	N	U	Approx. Weight
203	1/2	FXRU2B08N*■	FXRUG2B08N*■	2 1/2	41/64	1 7/8	1 3/32	2 3/16	1/4	3/8	3 3/16	21/64	0.60
	5/8	FXRU210N*■	FXRUG210N*■										
	11/16	FXRU211N*■	FXRUG211N*■										
204	3/4	FXRU212N*■	FXRUG212N*■	2 13/16	3/4	2 5/32	1 9/32	2 15/32	5/16	27/64	3 9/16	23/64	0.80
205	7/8	FXRU214N*Δ■	FXRUG214N*Δ■	3	51/64	2 3/8	1 23/64	2 23/32	5/16	27/64	3 3/4	23/64	1.00
	15/16	FXRU215N*Δ■	FXRUG215N*Δ■										
	1	FXRU216N*Δ■	FXRUG216N*Δ■										
206	1 1/8	FXRU218N*Δ■	FXRUG218N*Δ■	3 9/16	61/64	2 13/16	1 9/16	3 3/32	3/8	15/32	4 7/16	27/64	1.40
	1 3/16	FXRU219N*Δ■	FXRUG219N*Δ■										
	1 1/4	FXRU2E20N*Δ■	FXRUG2E20N*Δ■										
207	1 1/4	FXRU220N*Δ■	FXRUG220N*Δ■	3 15/16	1 7/64	3 7/32	1 49/64	3 1/2	3/8	1/2	4 13/16	7/16	2.00
	1 3/8	FXRU222N*Δ■	FXRUG222N*Δ■										
	1 7/16	FXRU223N*Δ■	FXRUG223N*Δ■										

Additional Notes

Please call 1-866-REXNORD for availability

Lubrication fitting tap size: for size codes 204 and below, 10-32 UNF: for all other size codes, 1/4 in-28 UNF

Short shank square neck carriage bolt is not recommended

* N lip seals standard

■ Available with H labyrinth seals

Δ Available with E3 triple lip seals

For the Selection Guide, Load Ratings and Speed Limits, see the Link-Belt 200 Series Ball Bearing Engineering section on pages 290 - 298.

Note: Dimensions subject to change. Certified dimensions of ordered material furnished on request.

FXRW200, FXRWG200

Photo Shows a 2-Bolt Ball Bearing Flanged Unit with High Test Iron Housing

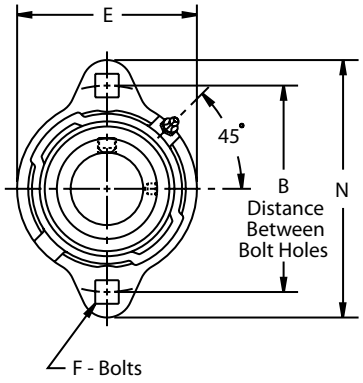

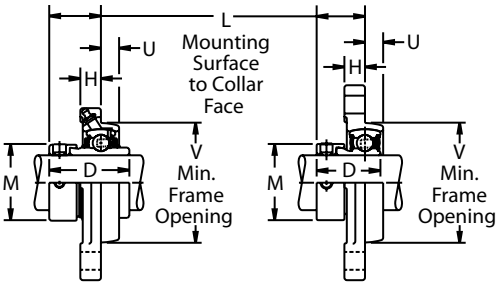

Product Features

- Corrosion-resistant powder coating
- High test iron housing
- Eccentric cam locking device
- Alignable & optional relubrication feature
- 2-bolt carriage inboard mounting
- See Features and Benefits for additional info on pages 286 - 287.

Bearing Dimensions

Size Code	Shaft Diameter	Non-Relubricatable Part Number	Relubricatable Part Number	B Distance Between Bolt Holes	L Mounting Surface to Collar Face	V Frame Opening	D	E	F Bolts	H	M	N	U	Approx. Weight
203	1/2	FXRW2B08E▲	FXRWG2B08E▲	2 1/2	7/8	1 7/8	1 1/8	2 3/16	1/4	3/8	1 1/8	3 3/16	21/64	0.50
	5/8	FXRW210E▲	FXRWG210E▲											
204	3/4	FXRW212E▲	FXRWG212E▲	2 13/16	59/64	2 5/32	1 7/32	2 15/32	5/16	27/64	1 5/16	3 9/16	23/64	0.70
205	7/8	FXRW214E▲	FXRWG214E▲	3	59/64	2 3/8	1 7/32	2 23/32	5/16	27/64	1 1/2	3 3/4	23/64	0.80
	15/16	FXRW215E▲	FXRWG215E▲											
	1	FXRW216E▲	FXRWG216E▲											
206	1 1/8	FXRW218E▲	FXRWG218E▲	3 9/16	1 3/64	2 13/16	1 13/32	3 3/32	3/8	15/32	1 3/4	4 7/16	27/64	1.20
	1 3/16	FXRW219E▲	FXRWG219E▲											
	1 1/4	FXRW2E20E▲	FXRWG2E20E▲											
207	1 1/4	FXRW220E▲	FXRWG220E▲	3 15/16	1 5/32	3 7/32	1 17/32	3 1/2	3/8	1/2	2 3/16	4 13/16	7/16	1.80
	1 3/8	FXRW222E▲	FXRWG222E▲											
	1 7/16	FXRW223E▲	FXRWG223E▲											

Additional Notes

Please call 1-866-REXNORD for availability

Lubrication fitting tap size: for size codes 204 and below, 10-32 UNF: for all other size codes, 1/4 in-28 UNF

Short shank square neck carriage bolt is not recommended

▲ E lip seals standard

For the Selection Guide, Load Ratings and Speed Limits, see the Link-Belt 200 Series Ball Bearing Engineering section on pages 290 - 298.

Note: Dimensions subject to change. Certified dimensions of ordered material furnished on request.

FY200, FYG200

Photo Shows a 3-Bolt Ball Bearing Flanged Unit with High Test Iron Housing

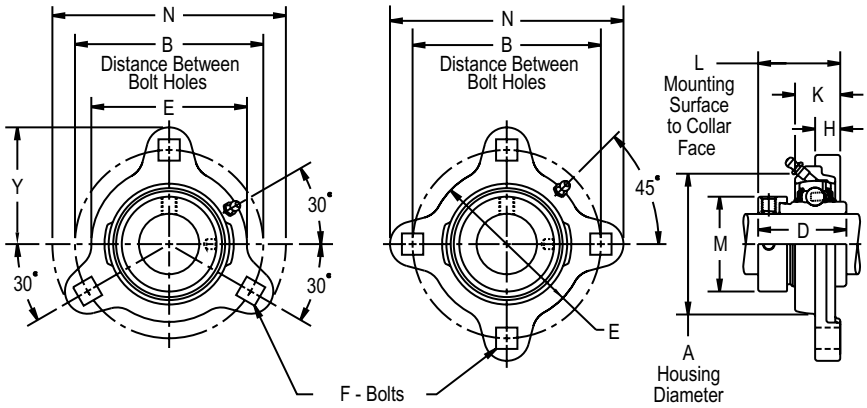

Product Features

- Corrosion-resistant powder coating
- High test iron housing
- Broad range of sealing options
- Wide inner ring for increased shaft stability
- Eccentric cam locking device
- Alignable & optional relubrication feature
- 3 or 4-bolt carriage outboard mounting
- See Features and Benefits for additional info on pages 286 - 287.

Bearing Dimensions

Size Code	Shaft Diameter	Non-Relubricatable Part Number	Non-Relubricatable A Housing Diameter	Relubricatable Part Number	Relubricatable A Housing Diameter	B Distance Between Bolt Holes	L Mounting Surface to Collar Face	D	E	F Bolts	H	K	M	N	Y	Approx. Weight
3-Bolt																
203	1/2	FY2B08N*■	1 25/32	FYG2B08N*■	1 29/32	2 1/2	1 19/64	1 15/32	2 3/32	1/4	3/8	45/64	1 1/8	3 3/16	1 19/32	0.60
	5/8	FY210N*■		FYG210N*■												
	11/16	FY211N*■		FYG211N*■												
204	3/4	FY212N*■	2 1/16	FYG212N*■	2 3/16	2 13/16	1 15/32	1 23/32	2 3/8	5/16	27/64	25/32	1 5/16	3 9/16	1 25/32	0.80
205	7/8	FY214N*Δ■	2 9/32	FYG214N*Δ■	2 3/8	3	1 31/64	1 3/4	2 5/8	5/16	27/64	25/32	1 1/2	3 3/4	1 7/8	1.00
	15/16	FY215N*Δ■		FYG215N*Δ■												
	1	FY216N*Δ■		FYG216N*Δ■												
206	1 1/8	FY218N*Δ■	2 23/32	FYG218N*Δ■	2 13/16	3 9/16	1 21/32	1 29/32	3 3/32	3/8	15/32	57/64	1 3/4	4 7/16	2 7/32	1.40
	1 3/16	FY219N*Δ■		FYG219N*Δ■												
	1 1/4	FY2E20N*Δ■		FYG2E20N*Δ■												
207	1 1/4	FY220N*Δ■	3 1/8	FYG220N*Δ■	3 7/32	3 15/16	1 25/32	2 1/64	3 1/2	3/8	1/2	15/16	2 3/16	4 13/16	2 13/32	2.00
	1 3/8	FY222N*Δ■		FYG222N*Δ■												
	1 7/16	FY223N*Δ■		FYG223N*Δ■												
4-Bolt																
208	1 1/2	FY224N*Δ■	3 15/32	FYG224N*Δ■	3 21/32	4 11/16	2	2 7/32	3 7/8	1/2	5/8	1 1/8	2 3/8	5 13/16	-	3.00
209	1 5/8	FY226N*Δ■	3 11/16	FYG226N*Δ■	3 13/16	4 3/4	2	2 7/32	4 7/32	1/2	5/8	1 1/8	2 1/2	5 7/8	-	3.10
	1 11/16	FY227N*Δ■		FYG227N*Δ■												
	1 3/4	FY228N*Δ■		FYG228N*Δ■												
210	1 15/16	FY231N*Δ■	3 7/8	FYG231N*Δ■	4 1/16	5	2 1/8	2 15/32	4 15/32	1/2	5/8	1 1/8	2 3/4	6 1/8	-	3.60
	2	FY2E32N*Δ■		FYG2E32N*Δ■												

Additional Notes

Please call 1-866-REXNORD for availability

Lubrication fitting tap size: for size codes 204 and below, 10-32 UNF: for all other size codes, 1/4 in-28 UNF

Loading slots are on mounting face side for non-relubricatable units

* N lip seals standard

■ Available with H labyrinth seals

Δ Available with E3 triple lip seals

For the Selection Guide, Load Ratings and Speed Limits, see the Link-Belt 200 Series Ball Bearing Engineering section on pages 290 - 298.

Note: Dimensions subject to change. Certified dimensions of ordered material furnished on request.

FU200, FUG200

Photo Shows a 3-Bolt Ball Bearing Flanged Unit with High Test Iron Housing

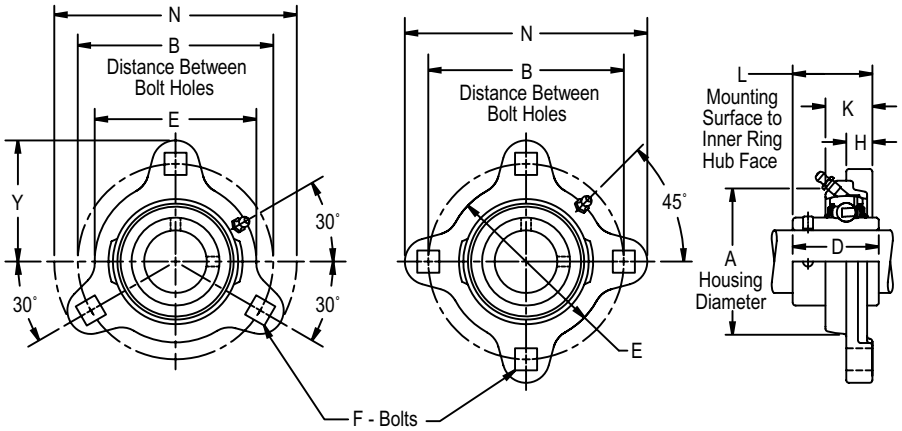

Product Features

- Corrosion-resistant powder coating
- High test iron housing
- Broad range of sealing options
- Wide inner ring for increased shaft stability
- Spring locking setscrew mount
- Alignable & optional relubrication feature
- 3 or 4-bolt carriage outboard mounting
- See Features and Benefits for additional info on pages 286 - 287.

Bearing Dimensions

Size Code	Shaft Diameter	Non-Relubricatable Part Number	Non-Relubricatable A Housing Diameter	Relubricatable Part Number	Relubricatable A Housing Diameter	B Distance Between Bolt Holes	L Mounting Surface to Inner Ring Hub Face	D	E	F Bolts	H	K	N	Y	Approx. Weight
3-Bolt															
203	1/2	FU2B08N*■	1 25/32	FUG2B08N*■	1 29/32	2 1/2	1 1/64	1 3/32	2 3/32	1/4	3/8	45/64	3 3/16	1 19/32	0.60
	5/8	FU210N*■		FUG210N*■											
	11/16	FU211N*■		FUG211N*■											
204	3/4	FU212N*■	2 1/16	FUG212N*■	2 3/16	2 13/16	1 11/64	1 9/32	2 3/8	5/16	27/64	25/32	3 9/16	1 25/32	0.80
205	7/8	FU214N*Δ■	2 9/32	FUG214N*Δ■	2 3/8	3	1 7/32	1 23/64	2 5/8	5/16	27/64	25/32	3 3/4	1 7/8	1.00
	15/16	FU215N*Δ■		FUG215N*Δ■											
	1	FU216N*Δ■		FUG216N*Δ■											
206	1 1/8	FU218N*Δ■	2 23/32	FUG218N*Δ■	2 13/16	3 9/16	1 27/64	1 9/16	3 3/32	3/8	15/32	57/64	4 7/16	2 7/32	1.40
	1 3/16	FU219N*Δ■		FUG219N*Δ■											
	1 1/4	FU2E20N*Δ■		FUG2E20N*Δ■											
207	1 1/4	FU220N*Δ■	3 1/8	FUG220N*Δ■	3 7/32	3 15/16	1 39/64	1 49/64	3 1/2	3/8	1/2	15/16	4 13/16	2 13/32	2.00
	1 3/8	FU222N*Δ■		FUG222N*Δ■											
	1 7/16	FU223N*Δ■		FUG223N*Δ■											
4-Bolt															
208	1 1/2	FU224N*Δ■	3 15/32	FUG224N*Δ■	3 21/32	4 11/16	1 51/64	1 29/32	3 7/8	1/2	5/8	1 1/8	5 13/16	-	3.00
209	1 5/8	FU226N*Δ■	3 11/16	FUG226N*Δ■	3 13/16	4 3/4	1 55/64	2 1/32	4 7/32	1/2	5/8	1 1/8	5 7/8	-	3.10
	1 11/16	FU227N*Δ■		FUG227N*Δ■											
	1 3/4	FU228N*Δ■		FUG228N*Δ■											
210	1 15/16	FU231N*Δ■	3 7/8	FUG231N*Δ■	4 1/16	5	1 57/64	2 3/32	4 15/32	1/2	5/8	1 1/8	6 1/8	-	3.60
	2	FU2E32N*Δ■		FUG2E32N*Δ■											

Additional Notes

Please call 1-866-REXNORD for availability

Lubrication fitting tap size: for size codes 204 and below, 10-32 UNF: for all other size codes, 1/4 in-28 UNF

Loading slots are on mounting face side for non-relubricatable units

* N lip seals standard

■ Available with H labyrinth seals

Δ Available with E3 triple lip seals

For the Selection Guide, Load Ratings and Speed Limits, see the Link-Belt 200 Series Ball Bearing Engineering section on pages 290 - 298.

Note: Dimensions subject to change. Certified dimensions of ordered material furnished on request.

FW200, FWG200

Photo Shows a 3-Bolt Ball Bearing Flanged Unit with High Test Iron Housing

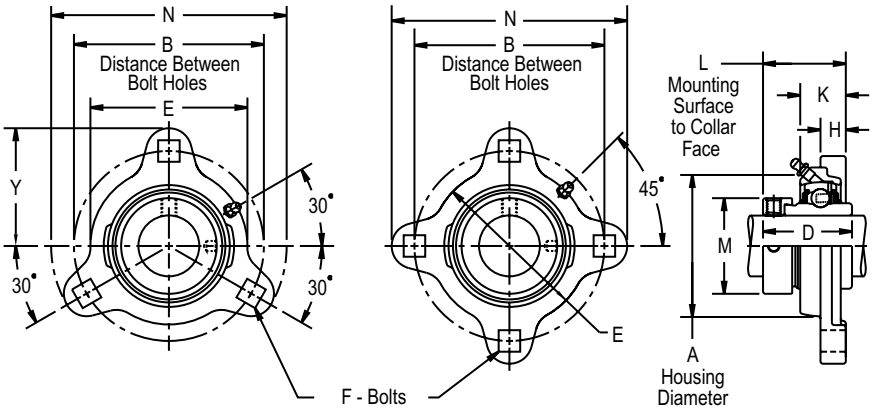

Product Features

- Corrosion-resistant powder coating
- High test iron housing
- Eccentric cam locking device
- Alignable & optional relubrication feature
- 3 or 4-bolt carriage outboard mounting
- See Features and Benefits for additional info on pages 286 - 287.

Bearing Dimensions

Size Code	Shaft Diameter	Non-Relubricatable Part Number	Non-Relubricatable A Housing Diameter	Relubricatable Part Number	Relubricatable A Housing Diameter	B Distance Between Bolt Holes	L Mounting Surface to Collar Face	D	E	F Bolts	H	K	M	N	Y	Approx. Weight
3-Bolt																
203	1/2	FW2B08E▲	1 25/32	FWG2B08E▲	1 29/32	2 1/2	1 1/4	1 1/8	2 3/32	1/4	3/8	45/64	1 1/8	3 3/16	1 19/32	0.50
	5/8	FW210E▲		FWG210E▲												
204	3/4	FW212E▲	2 1/16	FWG212E▲	2 3/16	2 13/16	1 11/32	1 7/32	2 3/8	5/16	27/64	25/32	1 5/16	3 9/16	1 25/32	0.70
205	7/8	FW214E▲	2 9/32	FWG214E▲	2 3/8	3	1 11/32	1 7/32	2 5/8	5/16	27/64	25/32	1 1/2	3 3/4	1 7/8	0.80
	15/16	FW215E▲		FWG215E▲												
	1	FW216E▲		FWG216E▲												
206	1 1/8	FW218E▲	2 23/32	FWG218E▲	2 13/16	3 9/16	1 17/32	1 13/32	3 3/32	3/8	15/32	57/64	1 3/4	4 7/16	2 7/32	1.20
	1 3/16	FW219E▲		FWG219E▲												
	1 1/4	FW2E20E▲		FWG2E20E▲												
207	1 1/4	FW220E▲	3 1/8	FWG220E▲	3 7/32	3 15/16	1 21/32	1 17/32	3 1/2	3/8	1/2	7/8	2 3/16	4 13/16	2 13/32	1.80
	1 3/8	FW222E▲		FWG222E▲												
	1 7/16	FW223E▲		FWG223E▲												
4-Bolt																
208	1 1/2	FW224E▲	3 15/32	FWG224E▲	3 21/32	4 11/16	1 29/32	1 23/32	3 7/8	1/2	5/8	1 1/8	2 3/8	5 13/16	-	2.80
209	1 5/8	FW226E▲	3 11/16	FWG226E▲	3 13/16	4 3/4	1 29/32	1 23/32	4 7/32	1/2	5/8	1 1/8	2 1/2	5 7/8	-	2.90
	1 11/16	FW227E▲		FWG227E▲												
	1 3/4	FW228E▲		FWG228E▲												
210	1 15/16	FW231E▲	3 7/8	FWG231E▲	4 1/16	5	1 29/32	1 23/32	4 15/32	1/2	5/8	1 1/8	2 3/4	6 1/8	-	3.10
	2	FW2E32E▲		FWG2E32E▲												

Additional Notes

Please call 1-866-REXNORD for availability

Lubrication fitting tap size: for size codes 204 and below, 10-32 UNF: for all other size codes, 1/4 in-28 UNF

Loading slots are on mounting face side for non-relubricatable units

▲ E lip seals standard

For the Selection Guide, Load Ratings and Speed Limits, see the Link-Belt 200 Series Ball Bearing Engineering section on pages 290 - 298.

Note: Dimensions subject to change. Certified dimensions of ordered material furnished on request.

FRY200, FRYG200

Photo Shows a 3-Bolt Ball Bearing Flanged Unit with High Test Iron Housing

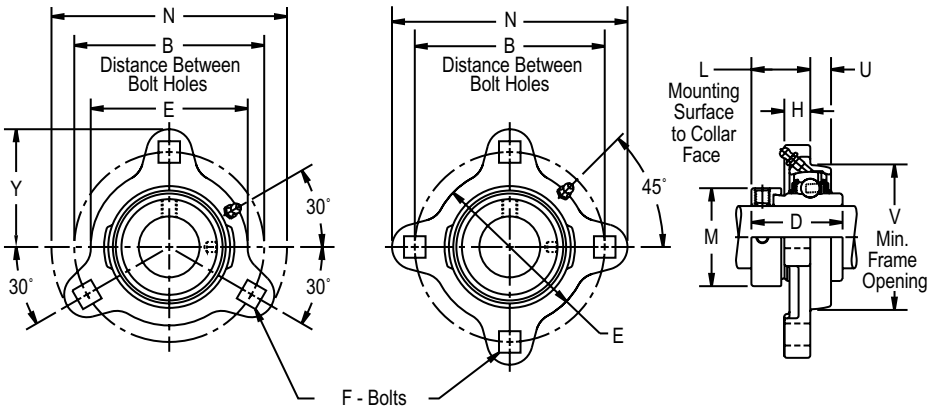

Product Features

- Corrosion-resistant powder coating
- High test iron housing
- Broad range of sealing options
- Wide inner ring for increased shaft stability
- Eccentric cam locking device
- Alignable & optional relubrication feature
- 3 or 4-bolt carriage inboard mounting
- See Features and Benefits for additional info on pages 286 - 287.

Bearing Dimensions

Size Code	Shaft Diameter	Non-Relubricatable Part Number	Relubricatable Part Number	B Distance Between Bolt Holes	L Mounting Surface to Collar Face	V Frame Opening	D	E	F Bolts	H	M	N	U	Y	Approx. Weight
3-Bolt															
203	1/2	FRY2B08N*■	FRYG2B08N*■	2 1/2	59/64	1 7/8	1 15/32	2 3/32	1/4	3/8	1 1/8	3 3/16	21/64	1 19/32	0.60
	5/8	FRY210N*■	FRYG210N*■												
	11/16	FRY211N*■	FRYG211N*■												
204	3/4	FRY212N*■	FRYG212N*■	2 13/16	1 3/64	2 5/32	1 23/32	2 3/8	5/16	27/64	1 5/16	3 9/16	23/64	1 25/32	0.80
205	7/8	FRY214N*Δ■	FRYG214N*Δ■	3	1 1/16	2 3/8	1 3/4	2 5/8	5/16	27/64	1 1/2	3 3/4	23/64	1 7/8	1.00
	15/16	FRY215N*Δ■	FRYG215N*Δ■												
	1	FRY216N*Δ■	FRYG216N*Δ■												
206	1 1/8	FRY218N*Δ■	FRYG218N*Δ■	3 9/16	1 3/16	2 13/16	1 25/32	3 3/32	3/8	15/32	1 3/4	4 7/16	27/64	2 7/32	1.40
	1 3/16	FRY219N*Δ■	FRYG219N*Δ■												
	1 1/4	FRY2E20N*Δ■	FRYG2E20N*Δ■												
207	1 1/4	FRY220N*Δ■	FRYG220N*Δ■	3 15/16	1 9/32	3 7/32	2 1/64	3 1/2	3/8	1/2	2 3/16	4 13/16	7/16	2 13/32	2.00
	1 3/8	FRY222N*Δ■	FRYG222N*Δ■												
	1 7/16	FRY223N*Δ■	FRYG223N*Δ■												
4-Bolt															
208	1 1/2	FRY224N*Δ■	FRYG224N*Δ■	4 11/16	1 3/8	3 9/16	2 7/32	3 7/8	1/2	5/8	2 3/8	5 13/16	1/2	-	3.00
209	1 5/8	FRY226N*Δ■	FRYG226N*Δ■	4 3/4	1 3/8	3 25/32	2 7/32	4 7/32	1/2	5/8	2 1/2	5 7/8	1/2	-	3.10
	1 11/16	FRY227N*Δ■	FRYG227N*Δ■												
	1 3/4	FRY228N*Δ■	FRYG228N*Δ■												
210	1 15/16	FRY231N*Δ■	FRYG231N*Δ■	5	1 1/2	3 31/32	2 15/32	4 15/32	1/2	5/8	2 3/4	6 1/8	1/2	-	3.60
	2	FRY2E32N*Δ■	FRYG2E32N*Δ■												

Additional Notes

Please call 1-866-REXNORD for availability

Lubrication fitting tap size: for size codes 204 and below, 10-32 UNF: for all other size codes, 1/4 in-28 UNF

Short shank square neck carriage bolt is not recommended

* N lip seals standard

■ Available with H labyrinth seals

Δ Available with E3 triple lip seals

For the Selection Guide, Load Ratings and Speed Limits, see the Link-Belt 200 Series Ball Bearing Engineering section on pages 290 - 298.

Note: Dimensions subject to change. Certified dimensions of ordered material furnished on request.

FRU200, FRUG200

Photo Shows a 3-Bolt Ball Bearing Flanged Unit with High Test Iron Housing

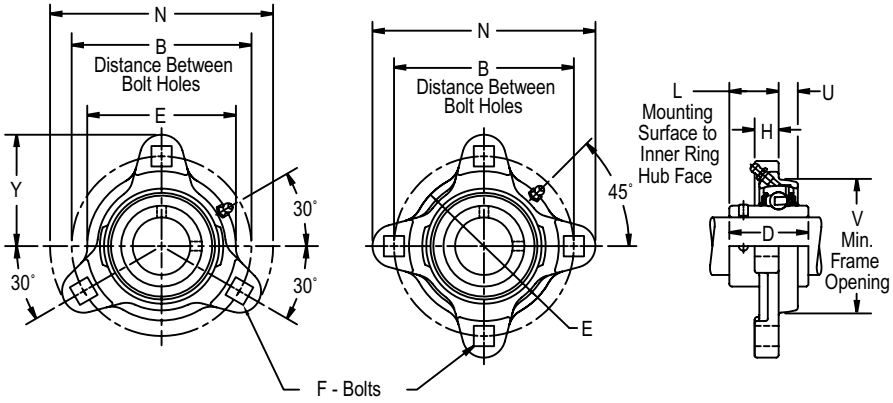

Product Features

- Corrosion-resistant powder coating
- High test iron housing
- Broad range of sealing options
- Wide inner ring for increased shaft stability
- Spring locking setscrew mount
- Alignable & optional relubrication feature
- 3 or 4-bolt carriage inboard mounting
- See Features and Benefits for additional info on pages 286 - 287.

Bearing Dimensions

Size Code	Shaft Diameter	Non-Relubricatable Part Number	Relubricatable Part Number	B Distance Between Bolt Holes	L Mounting Surface to Inner Ring Hub Face	V Frame Opening	D	E	F Bolts	H	N	U	Y	Approx. Weight
3-Bolt														
203	1/2	FRU2B08N*■	FRUG2B08N*■	2 1/2	41/64	1 7/8	1 3/32	2 3/32	1/4	3/8	3 3/16	21/64	1 19/32	0.60
	5/8	FRU210N*■	FRUG210N*■											
	11/16	FRU211N*■	FRUG211N*■											
204	3/4	FRU212N*■	FRUG212N*■	2 13/16	3/4	2 5/32	1 9/32	2 3/8	5/16	27/64	3 9/16	23/64	1 25/32	0.80
205	7/8	FRU214N*Δ■	FRUG214N*Δ■	3	51/64	2 3/8	1 23/64	2 5/8	5/16	27/64	3 3/4	23/64	1 7/8	1.00
	15/16	FRU215N*Δ■	FRUG215N*Δ■											
	1	FRU216N*Δ■	FRUG216N*Δ■											
206	1 1/8	FRU218N*Δ■	FRUG218N*Δ■	3 9/16	61/64	2 13/16	1 9/16	3 3/32	3/8	15/32	4 7/16	27/64	2 7/32	1.40
	1 3/16	FRU219N*Δ■	FRUG219N*Δ■											
	1 1/4	FRU2E20N*Δ■	FRUG2E20N*Δ■											
207	1 1/4	FRU220N*Δ■	FRUG220N*Δ■	3 15/16	1 7/64	3 7/32	1 49/64	3 1/2	3/8	1/2	4 13/16	7/16	2 13/32	2.00
	1 3/8	FRU222N*Δ■	FRUG222N*Δ■											
	1 7/16	FRU223N*Δ■	FRUG223N*Δ■											
4-Bolt														
208	1 1/2	FRU224N*Δ■	FRUG224N*Δ■	4 11/16	1 11/64	3 9/16	1 29/32	3 7/8	1/2	5/8	5 13/16	1/2	-	3.00
209	1 5/8	FRU226N*Δ■	FRUG226N*Δ■	4 3/4	1 15/64	3 25/32	2 1/32	4 7/32	1/2	5/8	5 7/8	1/2	-	3.10
	1 11/16	FRU227N*Δ■	FRUG227N*Δ■											
	1 3/4	FRU228N*Δ■	FRUG228N*Δ■											
210	1 15/16	FRU231N*Δ■	FRUG231N*Δ■	5	1 17/64	3 31/32	2 3/32	4 15/32	1/2	5/8	6 1/8	1/2	-	3.60
	2	FRU2E32N*Δ■	FRUG2E32N*Δ■											

Additional Notes

Please call 1-866-REXNORD for availability

Lubrication fitting tap size: for size codes 204 and below, 10-32 UNF: for all other size codes, 1/4 in-28 UNF

Short shank square neck carriage bolt is not recommended

* N lip seals standard

■ Available with H labyrinth seals

Δ Available with E3 triple lip seals

For the Selection Guide, Load Ratings and Speed Limits, see the Link-Belt 200 Series Ball Bearing Engineering section on pages 290 - 298.

Note: Dimensions subject to change. Certified dimensions of ordered material furnished on request.

FRW200, FRWG200

Photo Shows a 3-Bolt Ball Bearing Flanged Unit with High Test Iron Housing

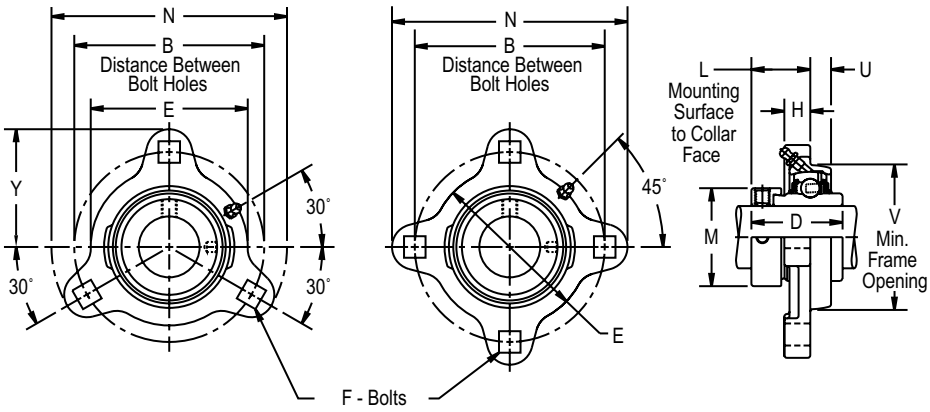

Product Features

- Corrosion-resistant powder coating
- High test iron housing
- Eccentric cam locking device
- Alignable & optional relubrication feature
- 3 or 4-bolt carriage inboard mounting
- See Features and Benefits for additional info on pages 286 - 287.

Bearing Dimensions

Size Code	Shaft Diameter	Non-Relubricatable Part Number	Relubricatable Part Number	B Distance Between Bolt Holes	L Mounting Surface to Collar Face	V Frame Opening	D	E	F Bolts	H	M	N	U	Y	Approx. Weight
3-Bolt															
203	1/2	FRW2B08E▲	FRWG2B08E▲	2 1/2	7/8	1 7/8	1 1/8	2 3/32	1/4	3/8	1 1/8	3 3/16	21/64	1 19/32	0.50
	5/8	FRW210E▲	FRWG210E▲												
204	3/4	FRW212E▲	FRWG212E▲	2 13/16	59/64	2 5/32	1 7/32	2 3/8	5/16	27/64	1 5/16	3 9/16	23/64	1 25/32	0.70
205	7/8	FRW214E▲	FRWG214E▲	3	59/64	2 3/8	1 7/32	2 5/8	5/16	27/64	1 1/2	3 3/4	23/64	1 7/8	0.80
	15/16	FRW215E▲	FRWG215E▲												
	1	FRW216E▲	FRWG216E▲												
206	1 1/8	FRW218E▲	FRWG218E▲	3 9/16	1 3/64	2 13/16	1 13/32	3 3/32	3/8	15/32	1 3/4	4 7/16	27/64	2 7/32	1.20
	1 3/16	FRW219E▲	FRWG219E▲												
	1 1/4	FRW2E20E▲	FRWG2E20E▲												
207	1 1/4	FRW220E▲	FRWG220E▲	3 15/16	1 5/32	3 7/32	1 17/32	3 1/2	3/8	1/2	2 3/16	4 13/16	7/16	2 13/32	1.80
	1 3/8	FRW222E▲	FRWG222E▲												
	1 7/16	FRW223E▲	FRWG223E▲												
4-Bolt															
208	1 1/2	FRW224E▲	FRWG224E▲	4 11/16	1 9/32	3 9/16	1 23/32	3 7/8	1/2	5/8	2 3/8	5 13/16	1/2	-	2.80
209	1 5/8	FRW226E▲	FRWG226E▲	4 3/4	1 9/32	3 25/32	1 23/32	4 7/32	1/2	5/8	2 1/2	5 7/8	1/2	-	2.90
	1 11/16	FRW227E▲	FRWG227E▲												
	1 3/4	FRW228E▲	FRWG228E▲												
210	1 15/16	FRW231E▲	FRWG231E▲	5	1 9/32	3 31/32	1 23/32	4 15/32	1/2	5/8	2 3/4	6 1/8	1/2	-	3.10
	2	FRW2E32E▲	FRWG2E32E▲												

Additional Notes

Please call 1-866-REXNORD for availability

Lubrication fitting tap size: for size codes 204 and below, 10-32 UNF: for all other size codes, 1/4 in-28 UNF

Short shank square neck carriage bolt is not recommended

▲ E lip seals standard

For the Selection Guide, Load Ratings and Speed Limits, see the Link-Belt 200 Series Ball Bearing Engineering section on pages 290 - 298.

Note: Dimensions subject to change. Certified dimensions of ordered material furnished on request.

MST

Photo Shows an Formed Steel 2-Bolt Flanged Housing Half

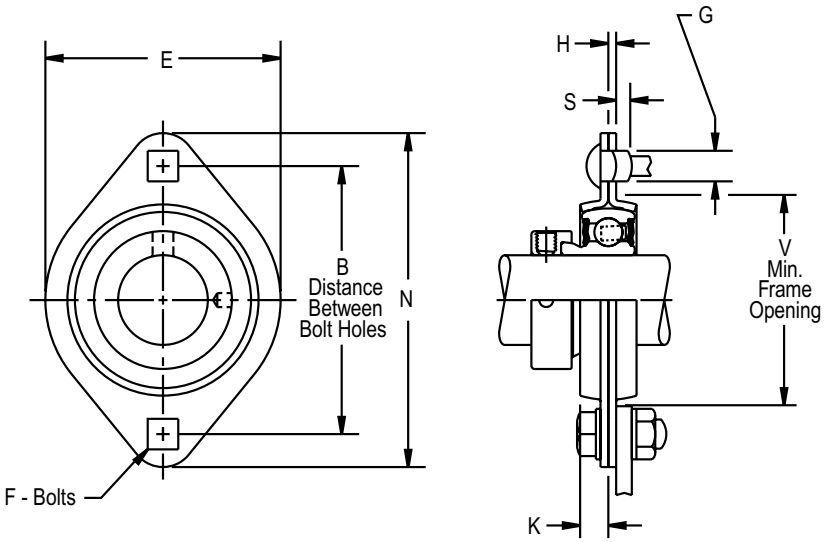

Product Features

- 2-piece formed steel housing
- For collar mounted, round, square or hex bore bearings
- Alignable & non-relubricatable
- 2-bolt carriage mounting
- Bearing not included
- See Features and Benefits for additional info on pages 286 - 287.

Bearing Dimensions

Size Code	Part Number	B Distance Between Bolt Holes	F - Bolts		V Frame Opening	E	G	H	K	N	S Carriage Bolt		Radial Load Rating	Approx. Weight
			Hole Size	Bolt Size							Short Shank	Long Shank		
203	40MST	2 1/2	9/32	1/4	1 15/16	2 5/16	13/32	0.075	9/32	3 3/16	0.006	0.100	600	0.10
204	47MST	2 13/16	11/32	5/16	2 3/16	2 5/8	1/2	0.083	5/16	3 9/16	0.021	0.115	700	0.20
205	52MST	3	11/32	5/16	2 3/8	2 51/64	1/2	0.083	11/32	3 3/4	0.021	0.115	800	0.20
206	62MST	3 9/16	13/32	3/8	2 13/16	3 5/16	19/32	0.104	11/32	4 7/16	0.011	0.104	1,100	0.20

Additional Notes

- Please call 1-866-REXNORD for availability
- Assembly requires two housing halves
- For bearing insert information, see Unmounted Replacement Bearings section on pages 379 - 398.
- Note: Dimensions subject to change. Certified dimensions of ordered material furnished on request.

MSTR

Photo Shows a Formed Steel 3-Bolt Triangular Flanged Housing Half

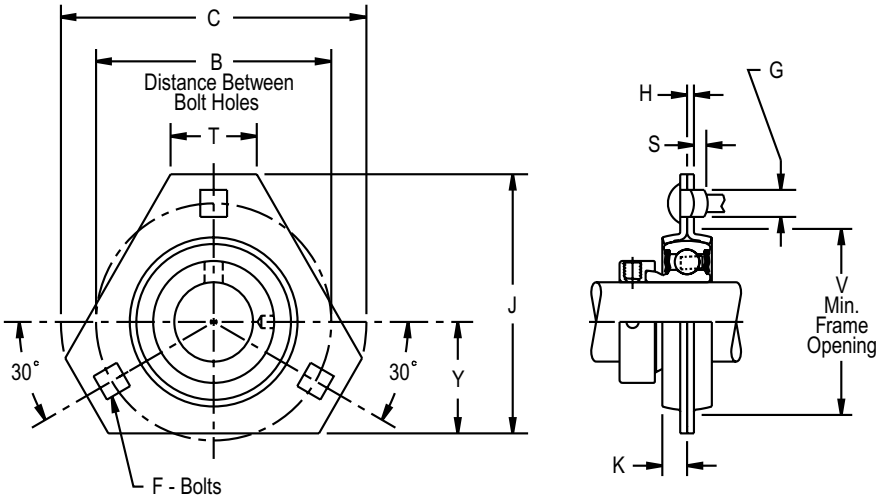

Product Features

- 2-piece formed steel housing
- For collar mounted, round, square or hex bore bearings
- Alignable & non-relubricatable
- 3-bolt carriage mounting
- Bearing not included
- See Features and Benefits for additional info on pages 286 - 287.

Bearing Dimensions

Size Code	Part Number	B Distance Between Bolt Holes	F - Bolts		V Frame Opening	C	G	H	J	K	S Carriage Bolt		T	Y	Radial Load Rating	Approx. Weight
			Hole Size	Bolt Size							Short Shank	Long Shank				
204	47MSTR	2 13/16	11/32	5/16	2 3/16	3 9/16	1/2	0.083	3	5/16	0.021	0.115	1 1/16	1 5/16	700	0.25
205	52MSTR	3	11/32	5/16	2 3/8	3 3/4	1/2	0.083	3 5/32	11/32	0.021	0.115	1 7/64	1 3/8	800	0.50
206	62MSTR	3 9/16	13/32	3/8	2 13/16	4 7/16	19/32	0.104	3 11/16	11/32	0.011	0.104	31/32	1 1/2	1,100	0.50

Additional Notes

- Please call 1-866-REXNORD for availability
- Assembly requires two housing halves
- For bearing insert information, see Unmounted Replacement Bearings section on pages 379 - 398.
- Note: Dimensions subject to change. Certified dimensions of ordered material furnished on request.

MS, MSC

Photo Shows a Formed Steel 3-Bolt or 4-Bolt Round Flanged Housing Half

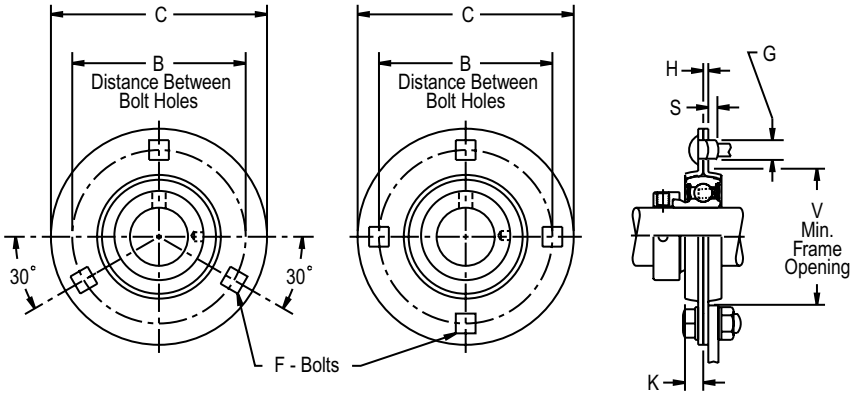

Product Features

- 2-piece formed steel housing
- For collar mounted, round, square or hex bore bearings
- Alignable & non-relubricatable
- 3 or 4-bolt carriage mounting
- Bearing not included
- See Features and Benefits for additional info on pages 286 - 287.

Bearing Dimensions

Size Code	Part Number	B Distance Between Bolt Holes	F - Bolts Hole Size	F - Bolts Bolt Size	V Frame Opening	C	G	H	K	S Carriage Bolts Short Shank	S Carriage Bolts Long Shank	Radial Load Rating	Approx. Weight
3-Bolt													
203	40MSC1	2 1/2	9/32	1/4	1 15/16	3 3/16	13/32	0.075	9/32	0.006	0.100	600	0.13
204	47MSC1	2 13/16	11/32	5/16	2 3/16	3 9/16	1/2	0.083	5/16	0.021	0.115	700	0.20
205	52MS2	3	11/32	5/16	2 3/8	3 3/4	1/2	0.104	11/32	0	0.073	1,100	0.30
	52MSC1							0.083		0.021	0.115	800	
206	62MSC1	3 9/16	13/32	3/8	2 13/16	4 7/16	19/32	0.104	11/32	0.011	0.104	1,100	0.35
207	72MS2	3 15/16	13/32	3/8	3 3/16	4 13/16	19/32	0.134	3/8	0	0.044	1,700	0.50
	72MS3							0.149			0.014	1,900	
	72MSC1							0.104		0.011	0.104	1,400	
4-Bolt													
208	80MSC1	4 11/16	17/32	1/2	3 9/16	5 13/16	49/64	0.134	13/32	0.013	0.107	1,700	0.80
209	85MSC1	4 3/4	17/32	1/2	3 13/16	5 7/8	49/64	0.134	7/16	0.013	0.107	1,700	1.00
210	90MSC1	5	17/32	1/2	4	6 1/8	49/64	0.149	7/16	0	0.077	1,900	1.00
211	100MSC1	5 7/16	17/32	1/2	4 7/16	6 9/16	49/64	0.149	15/32	0	0.077	1,900	1.10

Additional Notes

- Please call 1-866-REXNORD for availability
- Assembly requires two housing halves
- For bearing insert information, see Unmounted Replacement Bearings section on pages 379 - 398.
- Note: Dimensions subject to change. Certified dimensions of ordered material furnished on request.

GMSA, GMSB

Photo Shows a Formed Steel 3-Bolt or 4-Bolt Round Flanged Housing Half

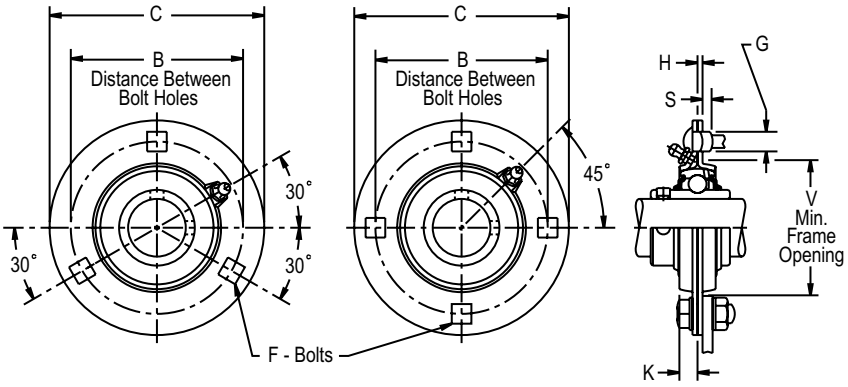

Product Features

- 2-piece formed steel housing
- For collar mounted, round, square or hex bore bearings
- Alignable & relubricatable
- 3 or 4-bolt carriage mounting
- Bearing not included
- See Features and Benefits for additional info on pages 286 - 287.

Bearing Dimensions

Size Code	Part Number	B Distance Between Bolt Holes	F - Bolts Hole Size	F - Bolts Bolt Size	V Frame Opening	C	G	H	K	S Carriage Bolts Short Shank	S Carriage Bolts Long Shank	Radial Load Rating	Approx. Weight
3-Bolt													
205	G52MSA	3	11/32	5/16	2 3/8	3 3/4	1/2	0.083	11/32	0.021	0.115	800	0.30
206	G62MSA	3 9/16	13/32	3/8	2 13/16	4 7/16	19/32	0.104	3/8	0.011	0.104	1,100	0.50
	G62MSA3							0.134		0	0.044	1,400	
	G62MSB							0.104		0.011	0.104	1,100	
	G62MSB3							0.134		0	0.044	1,400	
207	G72MSA	3 15/16	13/32	3/8	3 3/16	4 13/16	13/32	0.134	7/16	0	0.044	1,400	0.50
	G72MSB												
4-Bolt													
208	G80MSA	4 11/16	17/32	1/2	3 9/16	5 13/16	49/64	0.149	5/8	0.013	0.107	1,700	0.90
	G80MSB												
209	G85MSA	4 3/4	17/32	1/2	3 13/16	5 7/8	49/64	0.149	5/8	0.013	0.107	1,700	0.90
	G85MSB												
210	G90MSA	5	17/32	1/2	4	6 1/8	49/64	0.164	1/2	0	0.077	1,900	1.00
	G90MSB												
211	G100MSA	5 7/16	17/32	1/2	4 9/16	6 9/16	49/64	0.164	5/8	0	0.077	2,300	1.20
	G100MSB												

Additional Notes

- Please call 1-866-REXNORD for availability
- Assembly requires one GMSA & one GMSB
- G100MSA & G100MSB hole tolerance +/- .015 in *(+/- .038 mm)*
- GMSA are housing halves with straight lube fittings
- GMSB are housing halves without fittings

For bearing insert information, see Unmounted Replacement Bearings section on pages 379 - 398.

Note: Dimensions subject to change. Certified dimensions of ordered material furnished on request.

T3Y200

Photo Shows a Ball Bearing Take-up Unit

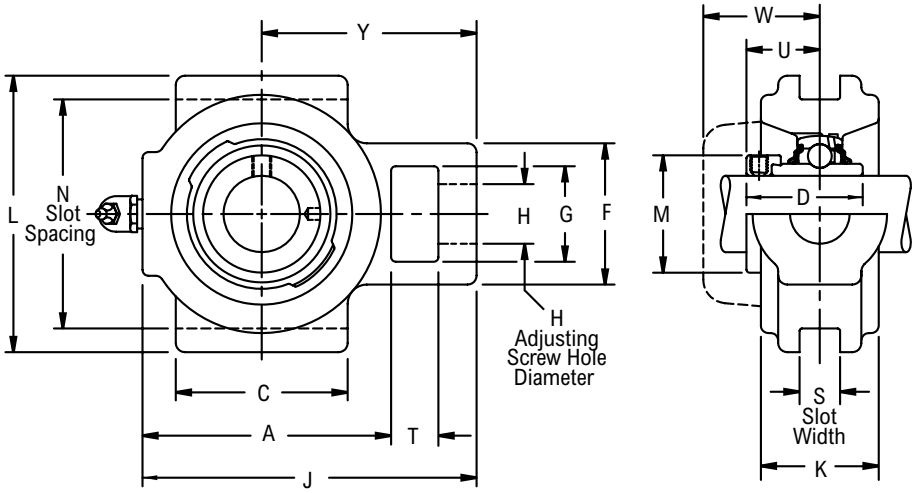

Product Features

- Corrosion-resistant powder coating
- Cast iron housing
- Standard slot design
- Broad range of sealing options
- Wide inner ring for increased shaft stability
- Eccentric cam locking device
- Alignable & relubricatable
- See Features and Benefits for additional info on pages 286 - 287.

Bearing Dimensions

Size Code	Shaft Diameter	Part Number	H Adjusting Screw Clearance	N Slot Spacing	S Slot Width	A	C	D	F	G	J	K	L	T	U	W	Y	Approx. Weight
203	5/8	T3Y210N*■	9/16	1.875	0.281	2 3/16	1 7/8	1 15/32	1 11/16	1 1/16	3	13/16	2 1/4	1/2	59/64	1 13/64	1 15/16	1.00
	11/16	T3Y211N*■																
	1/2	T3Y2B08N*■																
204	3/4	T3Y212N*■	9/16	2.125	0.281	2 1/2	1 7/8	1 23/32	1 11/16	1 1/16	3 5/16	15/16	2 5/8	1/2	1 3/64	1 5/16	2 3/32	1.50
205	7/8	T3Y214NΔ*■	9/16	2.375	0.281	2 3/4	2	1 3/4	1 11/16	1 1/16	3 9/16	1	2 7/8	1/2	1 1/16	1 5/16	2 7/32	2.00
	15/16	T3Y215NΔ*■																
	1	T3Y216NΔ*■																
206	1 1/8	T3Y218NΔ*■	5/8	2.875	0.406	3 1/4	2 3/8	1 29/32	1 7/8	1 1/8	4 3/16	1 3/32	3 1/2	9/16	1 3/16	1 29/64	2 19/32	3.00
	1 3/16	T3Y219NΔ*■																
	1 1/4	T3Y2E20NΔ*■																
207	1 1/4	T3Y220NΔ*■	11/16	3.375	0.406	3 11/16	2 5/8	2 1/64	2	1 1/4	4 11/16	1 3/16	4	5/8	1 9/32	1 35/64	2 7/8	3.40
	1 3/8	T3Y222NΔ*■																
	1 7/16	T3Y223NΔ*■																
208	1 1/2	T3Y224NΔ*■	11/16	3.500	0.406	4 1/16	2 7/8	2 7/32	2	1 1/4	5 1/8	1 11/32	4 1/8	5/8	1 3/8	1 41/64	3 1/8	4.50
209	1 5/8	T3Y226NΔ*■	7/8	3.750	0.406	4 5/16	3 1/8	2 7/32	2 1/4	1 7/16	5 3/8	1 3/8	4 1/2	5/8	1 3/8	1 21/32	3 1/4	5.30
	1 11/16	T3Y227NΔ*■																
	1 3/4	T3Y228NΔ*■																
210	1 15/16	T3Y231NΔ*■	7/8	4.000	0.406	4 9/16	3 1/4	2 15/32	2 1/4	1 7/16	5 5/8	1 13/32	4 3/4	5/8	1 1/2	1 53/64	3 3/8	6.00
211	2	T3Y232NΔ*■	1 1/8	4.500	0.531	5	3 3/4	2 13/16	2 7/8	1 15/16	6 1/4	1 9/16	5 1/4	3/4	1 23/32	2 1/64	3 25/32	7.60
	2 3/16	T3Y235NΔ*■																

Additional Notes

Please call 1-866-REXNORD for availability

Lubrication fitting tap size: for size code 203, 1/4 in-28 UNF: for all other size codes, 1/8 in PT

* N lip seals standard

■ Available with H labyrinth seals

Δ Available with E3 triple lip seals

For the Selection Guide, Load Ratings and Speed Limits, see the Link-Belt 200 Series Ball Bearing Engineering section on pages 290 - 298.

Note: Dimensions subject to change. Certified dimensions of ordered material furnished on request.

T3U200

Photo Shows a Ball Bearing Take-up Unit

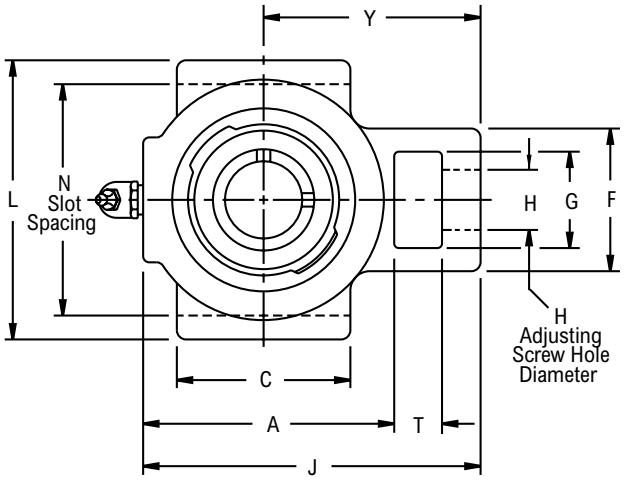

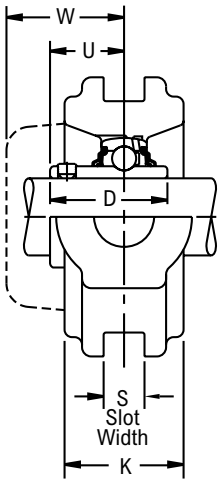

Product Features

- Corrosion-resistant powder coating
- Cast iron housing
- Standard slot design
- Broad range of sealing options
- Wide inner ring for increased shaft stability
- Spring locking setscrew mount
- Alignable & relubricatable
- See Features and Benefits for additional info on pages 286 - 287.

Bearing Dimensions

Size Code	Shaft Diameter	Part Number	H Adjusting Screw Clearance	N Slot Spacing	S Slot Width	A	C	D	F	G	J	K	L	T	U	W	Y	Approx. Weight
203	5/8	T3U210N*■	9/16	1 7/8	0.281	2 3/16	1 7/8	1 3/32	1 11/16	1 1/16	3	13/16	2 1/4	1/2	41/64	1 13/64	1 15/16	1.00
	11/16	T3U211N*■																
	1/2	T3U2B08N*■																
	17.00	*T3U2M17N*■*	*14.30*	*47.620*	*7.140*	*55.60*	*47.60*	*27.78*	*42.90*	*27.00*	*76.20*	*20.60*	*57.20*	*12.70*	*16.30*	*30.60*	*49.20*	*0.45*
204	3/4	T3U212N*■	9/16	2 1/8	0.281	2 1/2	1 7/8	1 9/32	1 11/16	1 1/16	3 5/16	15/16	2 5/8	1/2	3/4	1 5/16	2 3/32	1.50
	20.00	*T3U2M20N*■*	*14.30*	*53.980*	*7.140*	*63.50*	*47.60*	*32.54*	*42.90*	*27.00*	*84.10*	*23.80*	*66.70*	*12.70*	*19.00*	*33.30*	*53.20*	*0.68*
205	7/8	T3U214N*Δ■	9/16	2 3/8	0.281	2 3/4	2	1 23/64	1 11/16	1 1/16	3 9/16	1	2 7/8	1/2	51/64	1 5/16	2 7/32	2.00
	15/16	T3U215N*Δ■																
	1	T3U216N*Δ■																
	25.00	*T3U2M25N*Δ■*	*14.30*	*60.320*	*7.140*	*69.80*	*50.80*	*34.53*	*42.90*	*27.00*	*90.50*	*25.40*	*73.00*	*12.70*	*20.20*	*33.30*	*56.40*	*0.90*
206	1 1/8	T3U218N*Δ■	5/8	2 7/8	0.406	3 1/4	2 3/8	1 9/16	1 7/8	1 1/8	4 3/16	1 3/32	3 1/2	9/16	61/64	1 29/64	2 19/32	3.00
	1 3/16	T3U219N*Δ■																
	1 1/4	T3U2E20N*Δ■																
	30.00	*T3U2M30N*Δ■*	*15.90*	*73.020*	*10.310*	*82.60*	*60.30*	*39.69*	*47.60*	*28.60*	*106.40*	*27.80*	*88.90*	*14.30*	*24.20*	*36.90*	*65.90*	*1.35*
207	1 1/4	T3U220N*Δ■	11/16	3 3/8	0.406	3 11/16	2 5/8	1 49/64	2	1 1/4	4 11/16	1 3/16	4	5/8	1 7/64	1 35/64	2 7/8	3.40
	1 3/8	T3U222N*Δ■																
	1 7/16	T3U223N*Δ■																
	35.00	*T3U2M35N*Δ■*	*17.50*	*85.720*	*10.310*	*93.70*	*66.70*	*44.85*	*50.80*	*31.80*	*119.10*	*30.20*	*101.60*	*15.90*	*28.20*	*39.30*	*73.00*	*1.50*
208	1 1/2	T3U224N*Δ■	11/16	3 1/2	0.406	4 1/16	2 7/8	1 29/32	2	1 1/4	5 1/8	1 11/32	4 1/8	5/8	1 11/64	1 41/64	3 1/8	4.50
	40.00	*T3U2M40N*Δ■*	*17.50*	*88.900*	*10.310*	*103.20*	*73.00*	*48.42*	*50.80*	*31.80*	*130.20*	*34.10*	*104.80*	*15.90*	*29.80*	*41.70*	*79.40*	*2.00*
209	1 5/8	T3U226N*Δ■	7/8	3 3/4	0.406	4 5/16	3 1/8	2 1/32	2 1/4	1 7/16	5 3/8	1 3/8	4 1/2	5/8	1 15/64	1 21/32	3 1/4	5.30
	1 11/16	T3U227N*Δ■																
	1 3/4	T3U228N*Δ■																
	45.00	*T3U2M45N*Δ■*	*22.20*	*95.250*	*10.310*	*109.50*	*79.40*	*51.59*	*57.20*	*36.50*	*136.50*	*34.90*	*114.30*	*15.90*	*31.40*	*42.10*	*82.60*	*2.40*
210	1 15/16	T3U231N*Δ■	7/8	4	0.406	4 9/16	3 1/4	2 3/32	2 1/4	1 7/16	5 5/8	1 13/32	4 3/4	5/8	1 17/64	1 53/64	3 3/8	6.00
	2	T3U2E32N*Δ■																
	50.00	*T3U2M50N*Δ■*	*22.20*	*101.600*	*10.310*	*115.90*	*82.60*	*53.18*	*57.20*	*36.50*	*142.90*	*35.70*	*120.60*	*15.90*	*32.10*	*46.40*	*85.70*	*2.70*
211	2	T3U232N*Δ■	1 1/8	4 1/2	0.531	5	3 3/4	2 1/4	2 7/8	1 15/16	6 1/4	1 9/16	5 1/4	3/4	1 13/32	2 1/64	3 25/32	7.60
	2 3/16	T3U235N*Δ■																
	55.00	*T3U2M55N*Δ■*	*28.60*	*114.300*	*13.490*	*127.00*	*95.20*	*57.15*	*73.00*	*49.20*	*158.80*	*39.70*	*133.40*	*19.00*	*35.70*	*51.20*	*96.00*	*3.40*

Additional Notes

Please call 1-866-REXNORD for availability

Lubrication fitting tap size: for size code 203, 1/4 in-28 UNF: for all other size codes, 1/8 in PT

* N lip seals standard

■ Available with H labyrinth seals

Δ Available with E3 triple lip seals

For the Selection Guide, Load Ratings and Speed Limits, see the Link-Belt 200 Series Ball Bearing Engineering section on pages 290 - 298.

Note: Dimensions subject to change. Certified dimensions of ordered material furnished on request.

TH3CL200

Interchange: *WSTUDL, GRT200, ST-T*

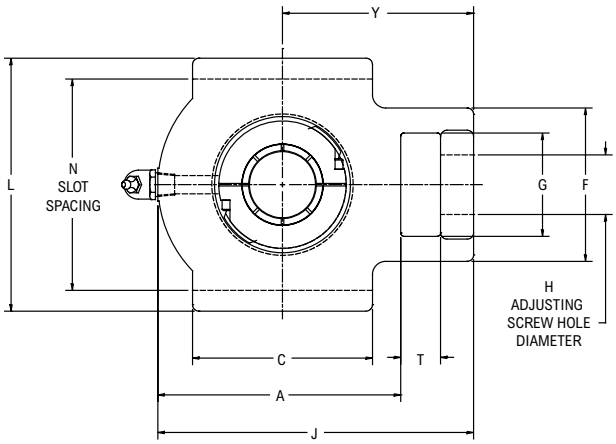

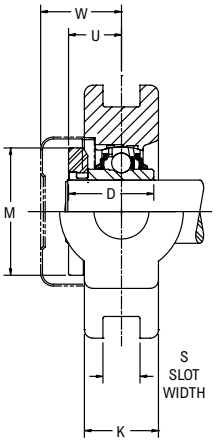

Product Features

- Corrosion-resistant powder coating
- Cast iron housing
- Wide slot design
- Broad range of sealing options
- Wide inner ring for increased shaft stability
- Alignable & relubricatable
- See Features and Benefits for additional info on pages 286 - 287.

Bearing Dimensions

Size Code	Shaft Diameter	Part Number	H Adjusting Screw Clearance	N Slot Spacing	S Slot Width	A	C	D	F	G	J	K	L	M	T	U	Y	W	Approx. Weight
204	1/2	TH3CL2B08N*■	3/4	3	0.531	2 27/32	2 1/4	1 11/32	1 7/8	1 1/4	3 31/32	1 1/16	3 5/8	2 1/16	5/8	0.84	2 21/32	1 21/64	2.40
	3/4	TH3CL212N*■																	
	20.00	*TH3CL2M20N*■*	*19.05*	*76.200*	*13.490*	*72.20*	*57.20*	*34.04*	*47.60*	*31.80*	*100.80*	*27.00*	*92.10*	*52.39*	*15.90*	*21.34*	*67.50*	*33.78*	*1.10*
205	7/8	TH3CL214N*Δ■	3/4	3	0.531	2 29/32	2 1/4	1 3/8	1 27/32	1 1/4	4 1/32	1 3/32	3 5/8	2 13/64	5/8	0.81	2 21/32	1 5/16	2.70
	15/16	TH3CL215N*Δ■																	
	1	TH3CL216N*Δ■																	
	25.00	*TH3CL2M25N*Δ■*	*19.05*	*76.200*	*13.490*	*73.80*	*57.20*	*34.80*	*46.80*	*31.80*	*102.40*	*27.80*	*92.10*	*55.96*	*15.90*	*20.57*	*67.50*	*33.27*	*1.20*
206	1	TH3CL2B16N*Δ■	7/8	3 1/2	0.531	3 11/32	2 1/2	1 9/16	2 3/16	1 7/16	4 15/32	1 3/32	4 1/8	2 19/32	5/8	0.95	2 27/32	1 15/32	3.20
	1 1/8	TH3CL218N*Δ■																	
	1 3/16	TH3CL219N*Δ■																	
	1 1/4	TH3CL2E20N*Δ■																	
	30.00	*TH3CL2M30N*Δ■*	*22.23*	*88.900*	*13.490*	*84.90*	*63.50*	*39.62*	*55.60*	*36.50*	*113.50*	*27.80*	*104.80*	*65.88*	*15.90*	*24.13*	*72.20*	*37.34*	*1.45*
207	1 3/16	TH3CL2B19N*Δ■	7/8	3 1/2	0.531	3 11/16	2 3/4	1 3/4	2 5/16	1 7/16	4 13/16	1 3/16	4 1/8	3 3/64	5/8	1.09	2 31/32	1 37/64	4.00
	1 1/4	TH3CL220N*Δ■																	
	1 3/8	TH3CL222N*Δ■																	
	1 7/16	TH3CL223N*Δ■																	
	35.00	*TH3CL2M35N*Δ■*	*22.23*	*88.900*	*13.490*	*93.70*	*69.90*	*44.45*	*58.70*	*36.50*	*122.20*	*30.20*	*104.80*	*77.39*	*15.90*	*27.69*	*75.40*	*40.13*	*1.80*
208	1 7/16	TH3CL2B23N*Δ■	1 1/8	3.969	0.688	4 3/16	3 1/4	1 15/16	2 27/32	1 15/16	5 9/16	1 5/16	4 3/4	3 3/16	3/4	1.22	3 15/32	1 43/64	5.30
	1 1/2	TH3CL224N*Δ■																	
	1 5/8	TH3CL2E26N*Δ■																	
	40.00	*TH3CL2M40N*Δ■*	*28.60*	*100.810*	*17.480*	*106.40*	*82.60*	*49.28*	*72.20*	*49.20*	*141.30*	*33.30*	*120.70*	*80.96*	*19.00*	*30.73*	*88.10*	*42.42*	*2.40*
209	1 1/2	TH3CL2B24N*Δ■	1 1/8	3.969	0.688	4 3/16	3 1/4	1 61/64	2 7/8	1 15/16	5 9/16	1 3/8	4 3/4	3 3/8	3/4	1.20	3 15/32	1 11/16	5.30
	1 5/8	TH3CL226N*Δ■																	
	1 11/16	TH3CL227N*Δ■																	
	1 3/4	TH3CL228N*Δ■																	
	45.00	*TH3CL2M45N*Δ■*	*28.60*	*100.810*	*17.480*	*106.40*	*82.60*	*49.53*	*73.00*	*49.20*	*141.30*	*34.90*	*120.70*	*85.73*	*19.00*	*30.48*	*88.10*	*42.67*	*2.40*
210	1 11/16	TH3CL2B27N*Δ■	1 1/8	3.969	0.688	4 9/16	3 3/8	2 5/64	2 7/8	1 15/16	5 15/16	1 43/64	4 3/4	3 3/4	3/4	1.33	3 19/32	1 51/64	6.60
	1 3/4	TH3CL2B28N*Δ■																	
	1 7/8	TH3CL230N*Δ■																	
	1 15/16	TH3CL231N*Δ■																	
	2	TH3CL2E32N*Δ■																	
	50.00	*TH3CL2M50N*Δ■*	*28.60*	*100.810*	*17.480*	*115.90*	*85.70*	*52.58*	*73.00*	*49.20*	*150.80*	*42.50*	*120.70*	*95.25*	*19.00*	*33.53*	*91.30*	*45.72*	*3.00*

Continued...

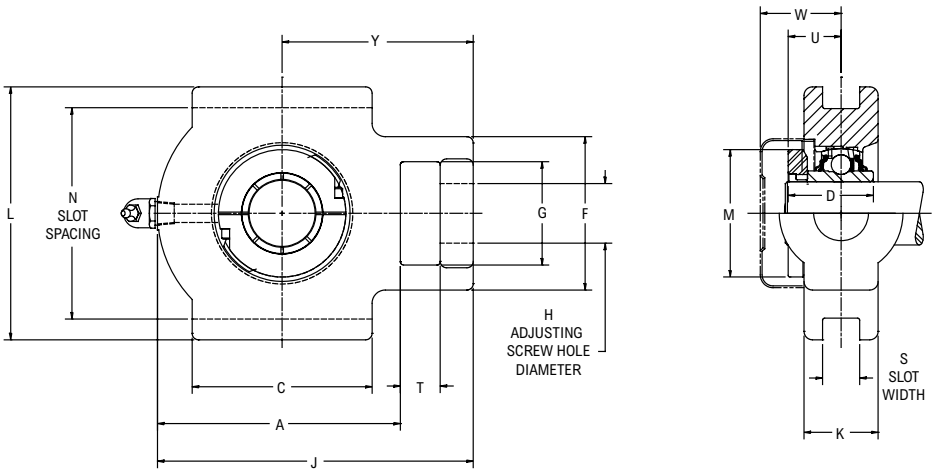

Continued...

Bearing Dimensions

Size Code	Shaft Diameter	Part Number	H Adjusting Screw Clearance	N Slot Spacing	S Slot Width	A	C	D	F	G	J	K	L	M	T	U	Y	W	Approx. Weight
211	1 15/16	TH3CL2B31N*Δ■	1 3/8	5.094	1.062	5 7/16	4	2 15/64	3 19/32	2 1/2	7 7/16	1 3/4	5 7/8	4 5/64	1 1/4	1.41	4 23/32	1 15/16	13.50
	2	TH3CL232N*Δ■																	
	2 3/16	TH3CL235N*Δ■																	
	2 1/4	TH3CL2E36N*Δ■																	
	55.00	*TH3CL2M55N*Δ■*	*34.90*	*129.390*	*26.970*	*138.10*	*101.60*	*56.90*	*91.30*	*63.50*	*188.90*	*44.50*	*149.20*	*103.58*	*31.80*	*35.56*	*119.90*	*49.28*	*6.00*
212	2 3/16	TH3CL2B35N*Δ■	1 3/8	5.094	1.062	5 7/16	4	3 1/16	3 19/32	2 1/2	7 7/16	2 1/16	5 7/8	4 9/32	1 1/4	2.06	4 23/32	2 13/32	12.90
	2 1/4	TH3CL236N*Δ■																	
	2 3/8	TH3CL238N*Δ■																	
	2 7/16	TH3CL239N*Δ■																	
	60.00	*TH3CL2M60N*Δ■*	*34.90*	*129.390*	*26.970*	*138.10*	*101.60*	*77.72*	*91.30*	*63.50*	*188.90*	*52.40*	*149.20*	*108.74*	*31.80*	*52.32*	*119.90*	*60.96*	*5.80*

Additional Notes

Please call 1-866-REXNORD for availability
Lubrication fitting tap size, 1/8 in PT
* N lip seals standard
■ Available with H labyrinth seals
Δ Available with E3 triple lip seals

For the Selection Guide, Load Ratings and Speed Limits, see the Link-Belt 200 Series Ball Bearing Engineering section on pages 290 - 298.

Note: Dimensions subject to change. Certified dimensions of ordered material furnished on request.

TH3Y200

Interchange: *WSTUSXR, TU-WF, RTU*

Photo Shows a Ball Bearing Take-up Unit

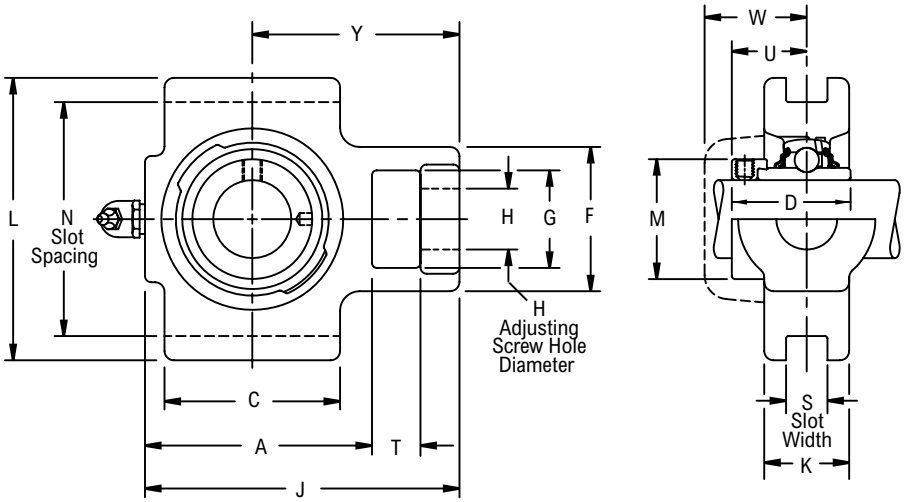

Product Features

- Corrosion-resistant powder coating
- Cast iron housing
- Wide slot design
- Broad range of sealing options
- Wide inner ring for increased shaft stability
- Eccentric cam locking device
- Alignable & relubricatable
- See Features and Benefits for additional info on pages 286 - 287.

Bearing Dimensions

Size Code	Shaft Diameter	Part Number	H Adjusting Screw Clearance	N Slot Spacing	S Slot Width	A	C	D	F	G	J	K	L	M	T	U	W	Y	Approx. Weight
204	3/4	TH3Y212N*■	3/4	3	0.531	2 27/32	2 1/4	1 23/32	1 7/8	1 1/4	3 31/32	1 1/16	3 5/8	1 5/16	5/8	1 3/64	1 5/16	2 21/32	2.40
205	7/8	TH3Y214N*Δ■	3/4	3	0.531	2 29/32	2 1/4	1 3/4	1 27/32	1 1/4	4 1/32	1 3/32	3 5/8	1 1/2	5/8	1 1/16	1 5/16	2 21/32	2.70
	15/16	TH3Y215N*Δ■																	
	1	TH3Y216N*Δ■																	
206	1 1/8	TH3Y218N*Δ■	7/8	3 1/2	0.531	3 11/32	2 1/2	1 29/32	2 3/16	1 7/16	4 15/32	1 3/32	4 1/8	1 3/4	5/8	1 3/16	1 29/64	2 27/32	3.20
	1 3/16	TH3Y219N*Δ■																	
	1 1/4	TH3Y2E20N*Δ■																	
207	1 1/4	TH3Y220N*Δ■	7/8	3 1/2	0.531	3 11/16	2 3/4	2 1/64	2 5/16	1 7/16	4 13/16	1 3/16	4 1/8	2 3/16	5/8	1 9/32	1 5/8	2 31/32	4.00
	1 3/8	TH3Y222N*Δ■																	
	1 7/16	TH3Y223N*Δ■																	
208	1 1/2	TH3Y224N*Δ■	1 1/8	3.969	0.688	4 3/16	3 1/4	2 7/32	2 27/32	1 15/16	5 9/16	1 5/16	4 3/4	2 3/8	3/4	1 3/8	1 41/64	3 15/32	5.30
209	1 5/8	TH3Y226N*Δ■	1 1/8	3.969	0.688	4 3/16	3 1/4	2 7/32	2 7/8	1 15/16	5 9/16	1 3/8	4 3/4	2 1/2	3/4	1 3/8	1 3/4	3 15/32	5.30
	1 11/16	TH3Y227N*Δ■																	
	1 3/4	TH3Y228N*Δ■																	
210	1 15/16	TH3Y231N*Δ■	1 1/8	3.969	0.688	4 9/16	3 3/8	2 15/32	2 7/8	1 15/16	5 15/16	1 43/64	4 3/4	2 3/4	3/4	1 1/2	1 25/32	3 19/32	6.60
	2	TH3Y2E32N*Δ■																	
211	2	TH3Y232N*Δ■	1 3/8	5.094	1.062	5 7/16	4	2 13/16	3 19/32	2 1/2	7 7/16	1 3/4	5 7/8	3	1 1/4	1 23/32	2 1/64	4 23/32	13.50
	2 3/16	TH3Y235N*Δ■																	
212	2 1/4	TH3Y236N*Δ■	1 3/8	5.094	1.062	5 7/16	4	3 1/16	3 19/32	2 1/2	7 7/16	2 1/16	5 7/8	3 5/16	1 1/4	1 27/32	2 7/64	4 23/32	12.90
	2 3/8	TH3Y238N*Δ■																	
	2 7/16	TH3Y239N*Δ■																	

Additional Notes

Please call 1-866-REXNORD for availability
Lubrication fitting tap size, 1/8 in PT
* N lip seals standard
■ Available with H labyrinth seals
Δ Available with E3 triple lip seals

For the Selection Guide, Load Ratings and Speed Limits, see the Link-Belt 200 Series Ball Bearing Engineering section on pages 290 - 298.

Note: Dimensions subject to change. Certified dimensions of ordered material furnished on request.

TH3U200

Interchange: *WSTUSC, TU-TF, UCT200, ST, YTU*

Photo Shows a Ball Bearing Take-up Unit

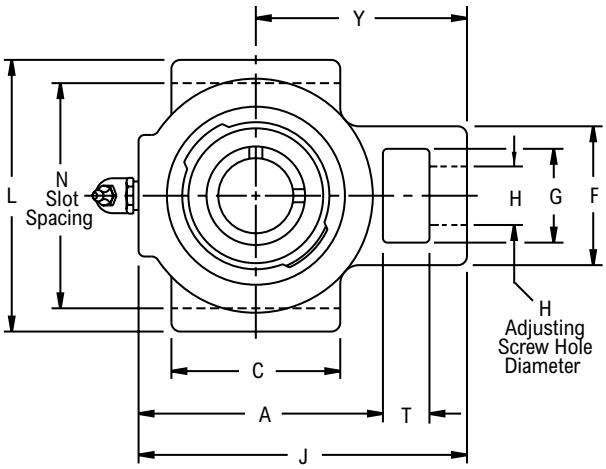

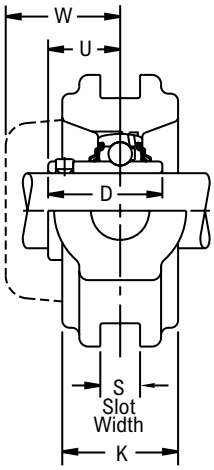

Product Features

- Corrosion-resistant powder coating
- Cast iron housing
- Wide slot design
- Broad range of sealing options
- Wide inner ring for increased shaft stability
- Spring locking setscrew mount
- Alignable & relubricatable
- See Features and Benefits for additional info on pages 286 - 287.

Bearing Dimensions

Size Code	Shaft Diameter	Part Number	H Adjusting Screw Clearance	N Slot Spacing	S Slot Width	A	C	D	F	G	J	K	L	T	U	W	Y	Approx. Weight
204	3/4	TH3U212N*■	3/4	3	0.531	2 27/32	2 1/4	1 9/32	1 7/8	1 1/4	3 31/32	1 1/16	3 5/8	5/8	3/4	1 5/16	2 21/32	2.40
205	7/8	TH3U214N*Δ■	3/4	3	0.531	2 29/32	2 1/4	1 23/64	1 27/32	1 1/4	4 1/32	1 3/32	3 5/8	5/8	51/64	1 5/16	2 21/32	2.70
	15/16	TH3U215N*Δ■																
	1	TH3U216N*Δ■																
206	1 1/8	TH3U218N*Δ■	7/8	3 1/2	0.531	3 11/32	2 1/2	1 9/16	2 3/16	1 7/16	4 15/32	1 3/32	4 1/8	5/8	61/64	1 29/64	2 27/32	3.20
	1 3/16	TH3U219N*Δ■																
	1 1/4	TH3U2E20N*Δ■																
207	1 1/4	TH3U220N*Δ■	7/8	3 1/2	0.531	3 11/16	2 3/4	1 49/64	2 5/16	1 7/16	4 13/16	1 3/16	4 1/8	5/8	1 7/64	1 35/64	2 31/32	4.00
	1 3/8	TH3U222N*Δ■														1 5/8		
	1 7/16	TH3U223N*Δ■														1 35/64		
208	1 1/2	TH3U224N*Δ■	1 1/8	3.969	0.688	4 3/16	3 1/4	1 29/32	2 27/32	1 15/16	5 9/16	1 5/16	4 3/4	3/4	1 11/64	1 41/64	3 15/32	5.30
209	1 5/8	TH3U226N*Δ■	1 1/8	3.969	0.688	4 3/16	3 1/4	2 1/32	2 7/8	1 15/16	5 9/16	1 3/8	4 3/4	3/4	1 15/64	1 21/32	3 15/32	5.30
	1 11/16	TH3U227N*Δ■																
	1 3/4	TH3U228N*Δ■																
210	1 15/16	TH3U231N*Δ■	1 1/8	3.969	0.688	4 9/16	3 3/8	2 3/32	2 7/8	1 15/16	5 15/16	1 43/64	4 3/4	3/4	1 17/64	1 25/32	3 19/32	6.60
	2	TH3U2E32N*Δ■																
211	2	TH3U232N*Δ■	1 3/8	5.094	1.062	5 7/16	4	2 1/4	3 19/32	2 1/2	7 7/16	1 3/4	5 7/8	1 1/4	1 13/32	2 1/64	4 23/32	13.50
	2 3/16	TH3U235N*Δ■																
212	2 1/4	TH3U236N*Δ■	1 3/8	5.094	1.062	5 7/16	4	2 1/2	3 19/32	2 1/2	7 7/16	2 1/16	5 7/8	1 1/4	1 9/16	2 7/64	4 23/32	12.90
	2 3/8	TH3U238N*Δ■																
	2 7/16	TH3U239N*Δ■																

Additional Notes

Please call 1-866-REXNORD for availability
Lubrication fitting tap size, 1/8 in PT
* N lip seals standard
■ Available with H labyrinth seals
Δ Available with E3 triple lip seals

For the Selection Guide, Load Ratings and Speed Limits, see the Link-Belt 200 Series Ball Bearing Engineering section on pages 290 - 298.

Note: Dimensions subject to change. Certified dimensions of ordered material furnished on request.

TH3S200

Interchange: *WSTUVSC, VTWS100*

Photo Shows a Ball Bearing Take-up Unit

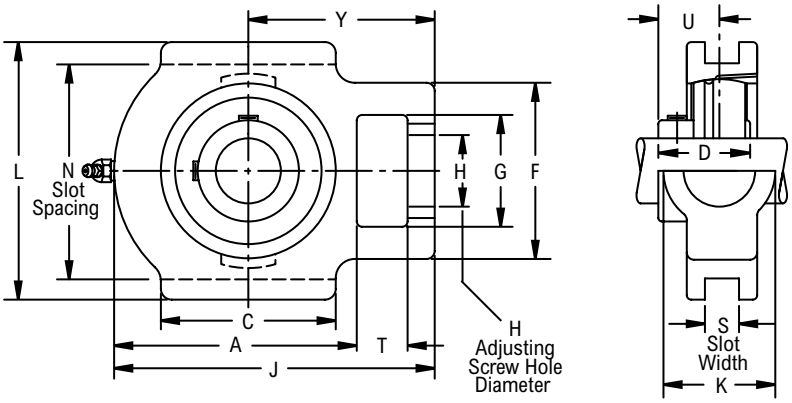

Product Features

- Corrosion-resistant powder coating
- Cast iron housing
- Wide slot design
- Broad range of sealing options
- Spring locking setscrew mount
- Alignable & relubricatable
- See Features and Benefits for additional info on pages 286 - 287.

Bearing Dimensions

Size Code	Shaft Diameter	Part Number	H Adjusting Screw Hole Diameter	N Slot Spacing	S Slot Width	A	C	D	F	G	J	K	L	T	U	Y	Approx. Weight
204	3/4	TH3S212E♦● □Δ	3/4	3.000	0.531	2 7/8	2	1 1/8	2	1 1/4	3 7/8	1 3/8	3 1/2	5/8	3/4	2 7/16	1.86
	20.00	*TH3S2M20E♦● □Δ*	*19.00*	*76.200*	*13.490*	*73.02*	*50.80*	*28.58*	*50.80*	*31.80*	*98.40*	*34.90*	*88.90*	*15.90*	*19.00*	*61.90*	*0.80*
205	7/8	TH3S214E♦● □Δ	3/4	3.000	0.531	2 7/8	2	1 11/64	2	1 1/4	3 7/8	1 3/8	3 1/2	5/8	51/64	2 7/16	1.85
	15/16	TH3S215E♦● □Δ															1.82
	1	TH3S216E♦● □Δ															1.79
	25.00	*TH3S2M25E♦● □Δ*	*19.00*	*76.200*	*13.490*	*73.02*	*50.80*	*29.77*	*50.80*	*31.80*	*98.40*	*34.90*	*88.90*	*15.90*	*20.20*	*61.90*	*0.80*
206	1 1/8	TH3S218E♦● □Δ	7/8	3.500	0.531	3 3/8	2 1/4	1 11/32	2 3/16	1 7/16	4 1/2	1 9/16	4 1/8	11/16	61/64	2 3/4	2.75
	1 3/16	TH3S219E♦● □Δ															2.72
	1 1/4	TH3S2E20E♦● □Δ															2.69
	30.00	*TH3S2M30E♦● □Δ*	*22.20*	*88.900*	*13.490*	*85.70*	*57.20*	*34.14*	*55.60*	*36.50*	*114.30*	*39.70*	*104.80*	*17.50*	*24.20*	*69.80*	*1.20*
207	1 1/4	TH3S220E♦● □Δ	7/8	3.500	0.531	4	2 1/2	1 9/16	2 3/8	1 7/16	5	1 9/16	4 1/8	11/16	1 7/64	3 1/16	3.19
	1 3/8	TH3S222E♦● □Δ															3.09
	1 7/16	TH3S223E♦● □Δ															3.03
	35.00	*TH3S2M35E♦● □Δ*	*22.20*	*88.900*	*13.490*	*101.60*	*63.50*	*39.67*	*60.30*	*36.50*	*127.00*	*39.70*	*104.80*	*17.50*	*28.20*	*77.80*	*1.40*
208	1 1/2	TH3S224E♦● □Δ	1 1/8	3.969	0.688	4 3/16	3 1/4	1 21/32	3 1/4	1 15/16	5 5/8	2 1/16	4 3/4	7/8	1 11/64	3 1/2	5.24
	1 5/8	TH3S2E26E♦● □Δ															5.10
	40.00	*TH3S2M40E♦● □Δ*	*28.60*	*100.810*	*17.480*	*106.40*	*82.60*	*42.06*	*82.60*	*49.20*	*133.40*	*52.40*	*120.60*	*22.20*	*29.80*	*88.90*	*2.30*
209	1 5/8	TH3S226E♦● □Δ	1 1/8	3.969	0.688	4 3/16	3 1/4	1 49/64	3 1/4	1 15/16	5 5/8	2 1/16	4 3/4	7/8	1 15/64	3 7/16	4.84
	1 11/16	TH3S227E♦● □Δ															4.77
	1 3/4	TH3S228E♦● □Δ															4.70
210	1 7/8	TH3S230E♦● □Δ	1 1/8	3.969	0.688	4 7/16	3 1/4	1 13/16	3 1/4	1 15/16	5 7/8	2 1/16	4 3/4	7/8	1 17/64	3 9/16	4.96
	1 15/16	TH3S231E♦● □Δ															4.87
	2	TH3S2E32E♦● □Δ															4.78
211	2	TH3S232E♦● □Δ	1 3/8	5.094	1.062	4 7/8	3 3/4	1 13/16	4	2 1/2	6 13/16	2 1/2	5 7/8	1 3/16	1 9/32	4 3/16	8.78
	2 3/16	TH3S235E♦● □Δ															8.58
	2 1/4	TH3S2E36E♦● □Δ															8.38
212	2 1/4	TH3S236E♦● □Δ	1 3/8	5.094	1.062	5 5/8	4	1 57/64	4	2 1/2	7 9/16	2 1/2	5 7/8	1 3/16	1 5/16	4 11/16	9.67
	2 3/8	TH3S238E♦● □Δ															9.43
	2 7/16	TH3S239E♦● □Δ															9.31
215	2 15/16	TH3S247E♦● □Δ	1 5/8	5.906	1.062	6 27/32	4 3/4	2 17/64	4 3/16	2 3/4	8 15/16	2 3/4	6 11/16	1 5/16	1 15/32	5 1/2	14.24

Additional Notes

Please call 1-866-REXNORD for availability
Lubrication fitting tap size, 1/8 in PT
Lip seals standard
♦ Available with E1 viton seals for all size codes
Available with free running style seals, add suffix ● FF, □ HFF or Δ MHFF for all size codes

For the Selection Guide, Load Ratings and Speed Limits, see the Link-Belt 200 Series Ball Bearing Engineering section on pages 290 - 298.

Note: Dimensions subject to change. Certified dimensions of ordered material furnished on request.

CHBS200

Interchange: *SCHB, UCHA200*

Photo Shows a Screw Conveyor Hanger Ball Bearing Unit

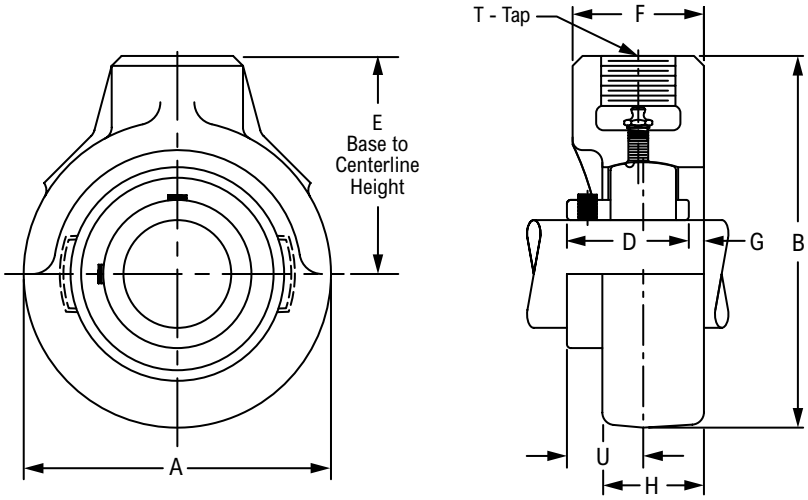

Product Features

Corrosion-resistant powder coating
Cast iron housing
Broad range of sealing options
Spring locking setscrew mount
Alignable & relubricatable
See Features and Benefits for additional info on pages 286 - 287.

Bearing Dimensions

Size Code	Shaft Diameter	Part Number	E Base to Centerline Height	T Depth	T Tap	A	B	D	F	G	H	U	Approx. Weight
206	1 1/8	CHBS218E♦● □Δ	2 1/2	5/8	3/4-14	3 3/8	4 3/16	1 11/32	1 21/32	7/16	1 7/32	61/64	2.25
	1 3/16	CHBS219E♦● □Δ											2.22
	1 1/4	CHBS2E20E♦● □Δ											2.19
	30.00	*CHBS2M30E♦● □Δ*	*63.50*	*15.90*	*3/4-14*	*85.70*	*106.40*	*34.14*	*42.10*	*11.10*	*31.00*	*24.20*	*1.00*
207	1 1/4	CHBS220E♦● □Δ	2 3/4	5/8	3/4-14	3 7/8	4 11/16	1 9/16	1 21/32	3/8	1 9/32	1 7/64	3.34
	1 3/8	CHBS222E♦● □Δ											3.24
	1 7/16	CHBS223E♦● □Δ											3.18
	35.00	*CHBS2M35E♦● □Δ*	*69.80*	*15.90*	*3/4-14*	*98.40*	*119.10*	*39.67*	*42.10*	*9.50*	*32.50*	*28.20*	*1.50*
208	1 1/2	CHBS224E♦● □Δ	2 7/8	5/8	3/4-14	4	4 7/8	1 21/32	1 21/32	11/32	1 11/32	1 11/64	3.39
	1 5/8	CHBS2E26E♦● □Δ											3.25
	40.00	*CHBS2M40E♦● □Δ*	*73.00*	*15.90*	*3/4-14*	*101.60*	*123.80*	*42.06*	*42.10*	*8.70*	*34.10*	*29.80*	*1.50*
210	1 7/8	CHBS230E♦● □Δ	3 1/4	13/16	1-11 1/2	4 5/8	5 9/16	1 13/16	1 7/8	13/32	1 13/32	1 17/64	4.81
	1 15/16	CHBS231E♦● □Δ											4.72
	2	CHBS2E32E♦● □Δ											4.63
212	2 3/8	CHBS238E♦● □Δ	4	1 1/8	1 1/4-11 1/2	5 5/8	6 13/16	1 57/64	2 5/16	37/64	1 5/8	1 5/16	8.08
	2 7/16	CHBS239E♦● □Δ											7.96
215	2 3/4	CHBS244E♦● □Δ	4 5/8	1 1/4	1 1/2-11 1/2	6 1/2	7 7/8	2 17/64	2 3/4	37/64	1 31/32	1 15/32	12.14
	2 15/16	CHBS247E♦● □Δ											11.64

Additional Notes

Please call 1-866-REXNORD for availability
Lubrication fitting tap size, 1/8 in PT
Base to centerline tolerance, +/- .005 in*(+/- 0.13 mm)*
Lip seals standard
♦ Available with E1 viton seals for all size codes
♦ Nickel plated housings available, add suffix K75

Available with free running style seals, add suffix ● FF, □ HFF or Δ MHFF for all size codes
For the Selection Guide, Load Ratings and Speed Limits, see the Link-Belt 200 Series Ball Bearing Engineering section on pages 290 - 298.
Note: Dimensions subject to change. Certified dimensions of ordered material furnished on request.

EHBS200

Interchange: *SEHB*

Photo Shows a Screw Conveyor Hanger Ball Bearing Unit

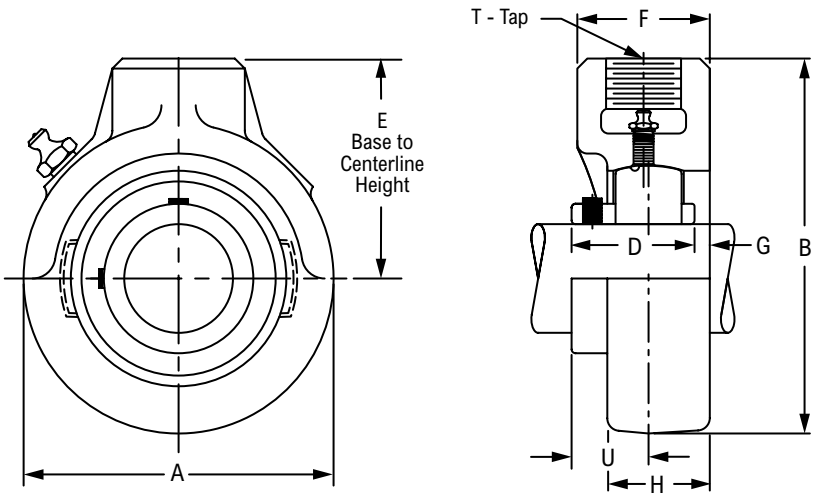

Product Features

- Corrosion-resistant powder coating
- Cast iron housing
- Broad range of sealing options
- Spring locking setscrew mount
- Alignable & relubricatable
- See Features and Benefits for additional info on pages 286 - 287.

Bearing Dimensions

Size Code	Shaft Diameter	Part Number	E Base to Centerline Height	T Depth	T Tap	A	B	D	F	G	H	U	Approx. Weight
206	1 1/8	EHBS218E♦● □Δ	2 1/2	5/8	3/4-14	3 3/8	4 3/16	1 11/32	1 21/32	7/16	1 7/32	61/64	2.25
	1 3/16	EHBS219E♦● □Δ											2.22
	1 1/4	EHBS2E20E♦● □Δ											2.19
	30.00	*EHBS2M30E♦● □Δ*	*63.50*	*15.90*	*3/4-14*	*85.70*	*106.40*	*34.14*	*42.10*	*11.10*	*31.00*	*24.20*	*1.00*
207	1 1/4	EHBS220E♦● □Δ	2 3/4	5/8	3/4-14	3 7/8	4 11/16	1 9/16	1 21/32	3/8	1 9/32	1 7/64	3.34
	1 3/8	EHBS222E♦● □Δ											3.24
	1 7/16	EHBS223E♦● □Δ											3.18
	35.00	*EHBS2M35E♦● □Δ*	*69.80*	*15.90*	*3/4-14*	*98.40*	*119.10*	*39.67*	*42.10*	*9.50*	*32.50*	*28.20*	*1.50*
208	1 1/2	EHBS224E♦● □Δ	2 7/8	5/8	3/4-14	4	4 7/8	1 21/32	1 21/32	11/32	1 11/32	1 11/64	3.39
	1 5/8	EHBS2E26E♦● □Δ											3.25
	40.00	*EHBS2M40E♦● □Δ*	*73.00*	*15.90*	*3/4-14*	*101.60*	*123.80*	*42.06*	*42.10*	*8.70*	*34.10*	*29.80*	*1.50*
210	1 7/8	EHBS230E♦● □Δ	3 1/4	13/16	1-11 ½	4 5/8	5 9/16	1 13/16	1 7/8	13/32	1 13/32	1 17/64	4.81
	1 15/16	EHBS231E♦● □Δ											4.72
	2	EHBS2E32E♦● □Δ											4.63
212	2 3/8	EHBS238E♦● □Δ	4	1 1/8	1 ¼-11 ½	5 5/8	6 13/16	1 57/64	2 5/16	37/64	1 5/8	1 5/16	8.08
	2 7/16	EHBS239E♦● □Δ											7.96
215	2 3/4	EHBS244E♦● □Δ	4 5/8	1 1/4	1 ½-11 ½	6 1/2	7 7/8	2 17/64	2 3/4	37/64	1 31/32	1 15/32	12.14
	2 15/16	EHBS247E♦● □Δ											11.64

Additional Notes

- Please call 1-866-REXNORD for availability
- Lubrication fitting tap size, 1/8 in PT
- Base to centerline tolerance, +/- .005 in*(+/- 0.13 mm)*
- Lip seals standard
- ♦ Available with E1 viton seals for all size codes
- ♦ Nickel plated housings available, add suffix K75

- Available with free running style seals, add suffix ● FF, □ HFF or Δ MHFF for all size codes
- For the Selection Guide, Load Ratings and Speed Limits, see the Link-Belt 200 Series Ball Bearing Engineering section on pages 290 - 298.
- Note: Dimensions subject to change. Certified dimensions of ordered material furnished on request.

TAS3U200

Photo Shows a Formed Steel Conveyor Take-up Frame with Ball Bearing Take-up Unit

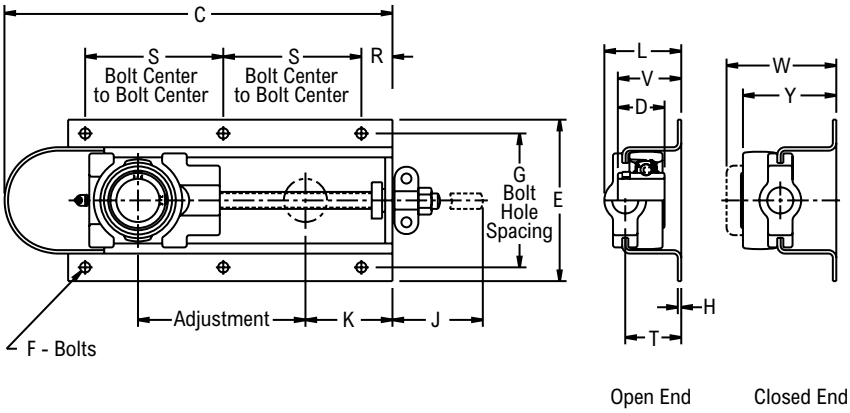

Product Features

- Center pull side mounted steel frame
- Corrosion-resistant powder coating
- Cast iron housing
- Broad range of sealing options
- Wide inner ring for increased shaft stability
- Spring locking setscrew mount
- Alignable & relubricatable
- TA3U200 take-up unit
- See Features and Benefits for additional info on pages 286 - 287.

Bearing Dimensions

Size Code	Shaft Diameter	Adjust. Length	Part Number	G Bolt Hole Spacing	S Bolt Center to Bolt Center	C	D	E	F Bolts	H	J	K	L	R	T	V	W	Y	Approx. Weight
205	15/16	6	TAS3U215N6*Δ■	4 1/8	4 1/2	13 1/4	1 23/64	4 7/8	5/16	1/8	7 3/16	3 3/8	2 5/16	1 1/2	1 5/8	1 51/64	3 37/64	2 27/32	7.50
	1		TAS3U216N6*Δ■																
	25.00	*152*	*TAS3U2M25N6*Δ■*	*104.80*	*114.30*	*336.50*	*34.53*	*123.80*	*8.00*	*3.20*	*198.40*	*85.70*	*58.70*	*38.10*	*41.30*	*45.60*	*90.90*	*72.20*	*3.40*
206	1 1/8	6	TAS3U218N6*Δ■	5 1/4	4 7/8	15	1 9/16	6 1/4	3/8	3/16	8 3/16	3 11/16	2 7/8	1 5/8	2 1/8	2 11/32	4 19/64	3 1/2	11.00
		12	TAS3U218N12*Δ■		5 3/8	21					14 3/16								15.00
	1 3/16	6	TAS3U219N6*Δ■		4 7/8	15					8 3/16								11.00
		12	TAS3U219N12*Δ■		5 3/8	21					14 3/16								15.00
	30.00	*152*	*TAS3U2M30N6*Δ■*	*133.40*	*123.80*	*381.00*	*39.69*	*158.80*	*10.00*	*4.80*	*208.00*	*93.70*	*73.00*	*41.30*	*54.00*	*59.50*	*109.10*	*88.90*	*4.95*
		305	*TAS3U2M30N12*Δ■*		*136.50*	*533.40*					*360.40*								*6.75*
207	1 1/4	6	TAS3U220N6*Δ■	5 1/4	4 7/8	15	1 49/64	6 1/4	3/8	3/16	8 5/16	3 3/4	2 7/8	1 5/8	2 1/8	2 31/64	4 7/16	3 35/64	13.50
		12	TAS3U220N12*Δ■		5 3/8	21					14 5/16								15.20
	1 7/16	6	TAS3U223N6*Δ■		4 7/8	15					8 5/16								13.00
		12	TAS3U223N12*Δ■		5 3/8	21					14 5/16								16.00
	35.00	*152*	*TAS3U2M35N6*Δ■*	*133.40*	*123.80*	*381.00*	*44.85*	*158.80*	*10.00*	*4.80*	*211.10*	*95.20*	*73.00*	*41.30*	*54.00*	*63.10*	*112.70*	*90.10*	*6.10*
		305	*TAS3U2M35N12*Δ■*		*136.50*	*533.40*					*363.50*								*6.80*
208	1 1/2	9	TAS3U224N9*Δ■	6 5/8	5	19 3/4	1 29/32	7 7/8	3/8	1/4	11 1/4	4 1/2	3 5/8	1 5/8	2 3/4	3 1/16	5 9/32	4 3/8	24.00
		18	TAS3U224N18*Δ■		6	28 3/4					20 1/4								31.00
	40.00	*229*	*TAS3U2M40N9*Δ■*	*168.30*	*127.00*	*501.60*	*48.42*	*200.00*	*10.00*	*6.40*	*285.80*	*114.30*	*92.10*	*41.30*	*69.80*	*77.80*	*134.10*	*111.10*	*10.80*
		457	*TAS3U2M40N18*Δ■*		*152.40*	*730.20*					*514.40*								*13.95*
209	1 11/16	9	TAS3U227N9*Δ■	6 5/8	5	19 3/4	2 1/32	7 7/8	3/8	1/4	11 3/16	4 5/8	3 5/8	1 5/8	2 3/4	3 1/16	5 7/16	4 1/2	25.50
		18	TAS3U227N18*Δ■		6	28 3/4					20 3/16								32.00
	1 3/4	9	TAS3U228N9*Δ■		5	19 3/4					11 3/16								25.00
		18	TAS3U228N18*Δ■		6	28 3/4					20 3/16								31.50
	45.00	*229*	*TAS3U2M45N9*Δ■*	*168.30*	*127.00*	*501.60*	*41.59*	*200.00*	*10.00*	*6.40*	*284.20*	*117.50*	*92.10*	*41.30*	*69.80*	*77.80*	*138.10*	*114.30*	*11.25*
		457	*TAS3U2M45N18*Δ■*		*152.40*	*730.20*					*512.80*								*14.20*
210	1 15/16	9	TAS3U231N9*Δ■	6 5/8	5	19 3/4	2 3/32	7 7/8	3/8	1/4	11 1/4	4 5/8	3 5/8	1 5/8	2 3/4	3 1/16	5 19/32	4 17/32	23.00
		18	TAS3U231N18*Δ■		6	28 3/4					20 1/4								29.80
	50.00	*229*	*TAS3U2M50N9*Δ■*	*168.30*	*127.00*	*501.60*	*53.18*	*200.00*	*10.00*	*6.40*	*285.80*	*117.50*	*92.10*	*41.30*	*69.80*	*77.80*	*142.10*	*115.10*	*10.35*
		457	*TAS3U2M50N18*Δ■*		*152.40*	*730.20*					*514.40*								*13.40*
211	2	9	TAS3U232N9*Δ■	7 1/8	5	21 5/8	2 1/4	8 1/4	1/2	1/4	11 3/16	5 1/2	4 1/4	2 1/2	3 1/4	3 11/16	6 5/16	5 1/16	32.30
		18	TAS3U232N18*Δ■		6	30 5/8					20 3/16								41.20
	2 3/16	9	TAS3U235N9*Δ■		5	21 5/8					11 3/16								29.90
		18	TAS3U235N18*Δ■		6	30 5/8					20 3/16								39.00
	55.00	*229*	*TAS3U2M55N9*Δ■*	*181.00*	*127.00*	*549.30*	*57.15*	*209.60*	*12.00*	*6.40*	*284.20*	*139.70*	*108.00*	*63.50*	*82.60*	*93.70*	*160.30*	*128.60*	*13.45*
		457	*TAS3U2M55N18*Δ■*		*152.40*	*777.90*					*512.80*								*17.55*

Additional Notes

- Please call 1-866-REXNORD for availability
- Lubrication fitting tap size, 1/8 in PT
- Closed end take-ups available, add suffix C
- On closed end take-up, bearing assembly is reversed
- Frames with 6 in *(152.40 mm)* adjustment have six holes
- Frames with 9 in *(228.60 mm)* or 12 in *(304.80 mm)* adjustment have eight holes
- Frames with 18 in *(457.20 mm)* adjustment have ten holes

- * N lip seals standard
- ■ Available with H labyrinth seals
- Δ Available with E3 triple lip seals
- For the Selection Guide, Load Ratings and Speed Limits, see the Link-Belt 200 Series Ball Bearing Engineering section on pages 290 - 298.
- Note: Dimensions subject to change. Certified dimensions of ordered material furnished on request.

TDS3U200

Photo Shows a Hinged Top, Welded Steel Conveyor Take-up Frame with Ball Bearing Take-up Unit

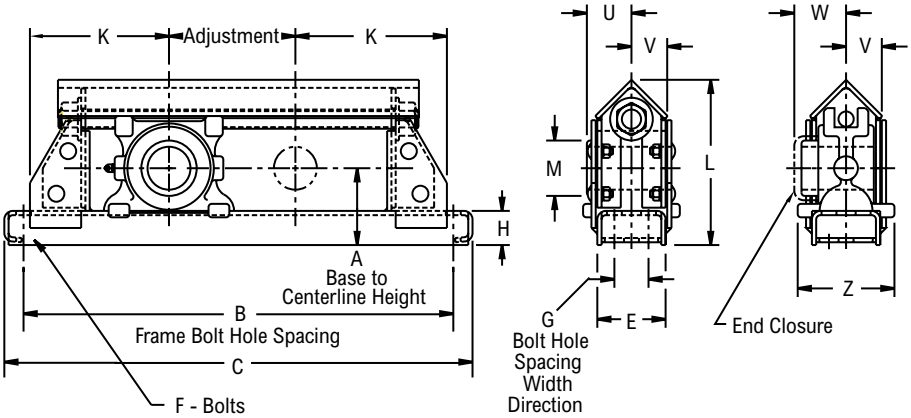

Product Features

- Protected screw type steel frame
- Corrosion-resistant powder coating
- Cast iron housing
- Broad range of sealing options
- Wide inner ring for increased shaft stability
- Spring locking setscrew mount
- Alignable & relubricatable
- TD3U200 take-up unit
- See Features and Benefits for additional info on pages 286 - 287.

Bearing Dimensions

Size Code	Shaft Diameter	Adjust. Length	Part Number	A Base to Centerline Height	B Frame Bolt Hole Spacing	G Bolt Hole Spacing Width Direction	C	E	F Bolts	H	K	L	M	U	V	W	Z	Approx. Weight
210	1 15/16	12	TDS3U231N12*Δ■	3 15/16	26 1/2	-	28 1/2	3	5/8	1 3/4	7 1/4	8 1/4	-	1 17/64	55/64	1 15/16	4 1/8	41.00
		18	TDS3U231N18*Δ■		32 1/2		34 1/2											47.00
		24	TDS3U231N24*Δ■		38 1/2		40 1/2											52.00
	50.00	305	TDS3U2M50N12*Δ■	100.00	673.10	-	723.90	76.20	16.00	44.40	184.20	209.60	-	32.10	21.80	49.20	104.80	18.45
		457	TDS3U2M50N18*Δ■		825.50		876.30											21.15
		610	TDS3U2M50N24*Δ■		977.90		1,028.70											23.40
211	2 3/16	12	TDS3U235N12*Δ■	4 3/16	27 1/2	-	29 1/2	3	5/8	1 3/4	7 3/4	8 11/16	-	1 13/32	55/64	2 3/32	4 1/8	45.00
		18	TDS3U235N18*Δ■		33 1/2		35 1/2											51.00
		24	TDS3U235N24*Δ■		39 1/2		41 1/2											56.00
	55.00	305	TDS3U2M55N12*Δ■	106.40	698.50	-	749.30	76.20	16.00	44.40	196.80	220.70	-	35.70	21.80	53.30	104.80	20.25
		457	TDS3U2M55N18*Δ■		850.90		901.70											22.95
		610	TDS3U2M55N24*Δ■		1,003.30		1,054.10											25.20
212	2 7/16	12	TDS3U239N12*Δ■	4 3/8	28 1/2	-	30 1/2	3	3/4	1 3/4	8 1/4	9 1/8	-	1 9/16	31/32	2 5/32	4 1/8	52.00
		18	TDS3U239N18*Δ■		34 1/2		36 1/2											58.00
		24	TDS3U239N24*Δ■		40 1/2		42 1/2											63.00
		30	TDS3U239N30*Δ■		46 1/2		48 1/2											68.00
	60.00	305	TDS3U2M60N12*Δ■	111.10	725.90	-	774.70	76.20	20.00	44.40	209.60	231.80	-	39.70	24.60	54.80	104.80	23.40
		457	TDS3U2M60N18*Δ■		876.30		927.10											26.10
		610	TDS3U2M60N24*Δ■		1,028.70		1,079.50											28.35
		762	TDS3U2M60N30*Δ■		1,181.10		1,231.90											30.60
215	2 15/16	12	TDSU247N12*Δ	5 1/8	30 1/2	2	32 1/2	4	5/8	2	9 1/4	10 5/8	4 5/8	1 13/16	1 5/32	2 13/64	5 1/8	76.00
		18	TDSU247N18*Δ		36 1/2		38 1/2											85.00
		24	TDSU247N24*Δ		42 1/2		44 1/2											93.00
		30	TDSU247N30*Δ		48 1/2		50 1/2											101.00
	75.00	305	TDSU2M75N12 *Δ	130.20	774.70	50.80	825.50	101.60	16.00	50.80	235.00	269.90	117.50	46.00	29.40	56.00	130.20	34.20
		457	TDSU2M75N18 *Δ		927.10		977.90											38.25
		610	TDSU2M75N24 *Δ		1,079.50		1,130.30											41.85
		762	TDSU2M75N30 *Δ		1,231.90		1,282.70											45.45
217	3 7/16	12	TDSU255N12*Δ	5 5/8	32	2	34 1/2	4	3/4	2	10	11 13/16	5 3/16	2 1/8	1 7/16	2 1/2	5 5/8	99.00
		18	TDSU255N18*Δ		38		40 1/4											108.00
		24	TDSU255N24*Δ		44		46 1/4											116.00
		30	TDSU255N30*Δ		50		52 1/4											124.00
	85.00	305	TDSU2M85N12 *Δ	142.90	812.80	50.80	870.00	101.60	20.00	50.80	254.00	300.00	131.80	54.00	36.50	63.50	142.90	44.55
		457	TDSU2M85N18 *Δ		965.20		1,022.40											48.60

Continued...

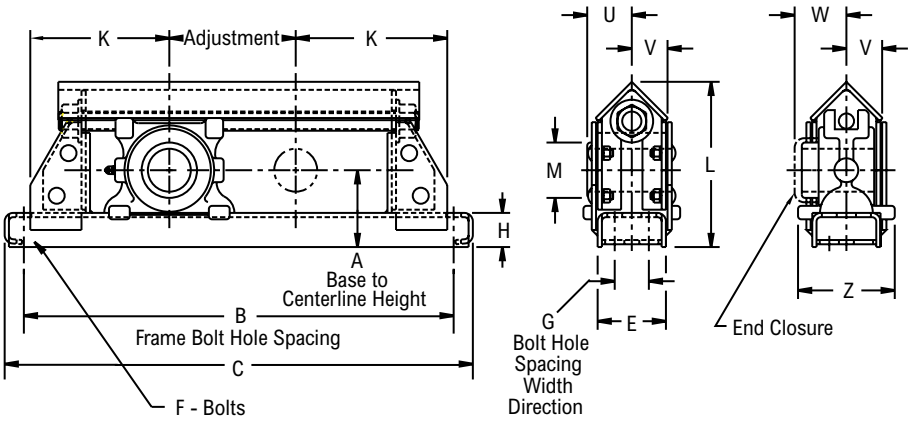

Continued...

Bearing Dimensions

Size Code	Shaft Diameter	Adjust. Length	Part Number	A Base to Centerline Height	B Frame Bolt Hole Spacing	G Bolt Hole Spacing Width Direction	C	E	F Bolts	H	K	L	M	U	V	W	Z	Approx. Weight
217	85.00	610	TDSU2M85N24 *Δ	142.90	1,117.60	50.80	1,174.80	101.60	20.00	50.80	254.00	300.00	131.80	54.00	36.50	63.50	142.90	52.20
		762	TDSU2M85N30 *Δ		1,270.00		1,327.20											55.80
220	3 15/16	12	TDSU263N12*	7	36	2 1/2	38 1/2	5	3/4	2 1/4	12	14 11/16	5 15/16	2 37/64	1 45/64	3 1/64	6 7/8	173.00
		18	TDSU263N18*		42		44 1/2											185.00
		24	TDSU263N24*		48		50 1/2											195.00
		30	TDSU263N30*		54		56 1/2											205.00
	100.00	305	TDSU2M100N12*	177.80	914.40	63.50	977.90	127.00	20.00	57.20	304.80	373.10	150.80	65.50	43.20	76.60	174.60	77.85
		457	TDSU2M100N18*		1,066.80		1,130.30											83.25
		610	TDSU2M100N24*		1,219.20		1,282.70											87.75
		762	TDSU2M100N30*		1,371.60		1,435.10											92.25

Additional Notes

Please call 1-866-REXNORD for availability

Lubrication fitting tap size, 1/8 in PT

Closed end take-ups available, add suffix C

Size code 220 has hinged top construction

Frames with 18 in *(457.20 mm)* adjustment or more have center supporting pad welded to bottom of frame

* N lip seals standard

■ Available with H labyrinth seals

Δ Available with E3 triple lip seals

For the Selection Guide, Load Ratings and Speed Limits, see the Link-Belt 200 Series Ball Bearing Engineering section on pages 290 - 298.

Note: Dimensions subject to change. Certified dimensions of ordered material furnished on request.

NT3U200

Photo Shows a Welded Channel Conveyor Take-up Frame with Ball Bearing Take-up Unit

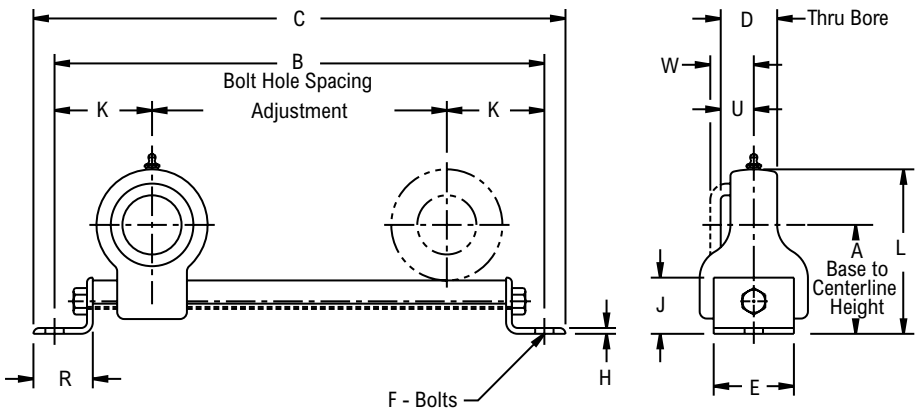

Product Features

- Protected screw welded channel frame
- Corrosion-resistant powder coating
- Cast iron housing
- Broad range of sealing options
- Wide inner ring for increased shaft stability
- Spring locking setscrew mount
- Alignable & relubricatable
- See Features and Benefits for additional info on pages 286 - 287.

Bearing Dimensions

Size Code	Shaft Diameter	Adjust. Length	Part Number	A Base to Centerline Height	B Frame Bolt Hole Spacing	C	D	E	F Bolts	H	J	K	L	R	U	W	Approx. Weight
205	15/16	6	NT3U215N6*	2 3/4	10 7/8	12 1/4	1 23/64	1 3/4	1/2	3/16	1 1/2	2 7/16	4 3/16	2	51/64	1 9/32	4.50
	1		NT3U216N6*														
	25.00	*152*	*NT3U2M25N6**	*69.80*	*276.20*	*311.20*	*34.53*	*44.40*	*12.00*	*4.80*	*38.10*	*61.90*	*106.40*	*50.80*	*20.20*	*32.50*	*2.00*
206	1 3/16	6	NT3U219N6*	3	10 7/8	12 1/4	1 9/16	1 3/4	1/2	3/16	1 1/2	2 7/16	4 11/16	2	61/64	1 15/32	5.00
	30.00	*152*	*NT3U2M30N6**	*76.20*	*276.20*	*311.20*	*39.69*	*44.40*	*12.00*	*4.80*	*38.10*	*61.90*	*119.10*	*50.80*	*24.20*	*37.30*	*2.25*
207	1 7/16	9	NT3U223N9*	3 11/16	14 1/2	16 1/2	1 49/64	2 1/4	1/2	1/4	2	2 3/4	5 9/16	2 1/2	1 7/64	1 9/16	9.50
		12	NT3U223N12*		17 1/2	19 1/2											10.00
	35.00	*229*	*NT3U2M35N9**	*93.70*	*368.30*	*419.10*	*44.85*	*57.20*	*12.00*	*6.40*	*50.80*	*69.80*	*141.30*	*63.50*	*28.20*	*39.70*	*4.30*
		305	*NT3U2M35N12**		*444.50*	*495.30*											*4.50*
210	1 15/16	9	NT3U231N9*	4 21/32	16	18 1/2	2 3/32	3 1/4	5/8	5/16	2 1/2	3 1/2	6 29/32	3	1 17/64	1 25/32	18.00
		12	NT3U231N12*		19	21 1/2											19.00
		18	NT3U231N18*		25	27 1/2											21.00
	50.00	*229*	*NT3U2M50N9**	*118.30*	*406.40*	*469.90*	*53.18*	*82.60*	*16.00*	*7.90*	*63.50*	*88.90*	*175.40*	*76.20*	*32.10*	*45.20*	*8.10*
		305	*NT3U2M50N12**		*482.60*	*546.10*											*8.55*
		457	*NT3U2M50N18**		*635.00*	*698.50*											*9.50*

Additional Notes

Please call 1-866-REXNORD for availability
Lubrication fitting tap size, 1/8 in PT
* N lip seals standard
For the Selection Guide, Load Ratings and Speed Limits, see the Link-Belt 200 Series Ball Bearing Engineering section on pages 290 - 298.

Note: Dimensions subject to change. Certified dimensions of ordered material furnished on request.

LC

Photo Shows a Light Duty Conveyor Take-up Frame

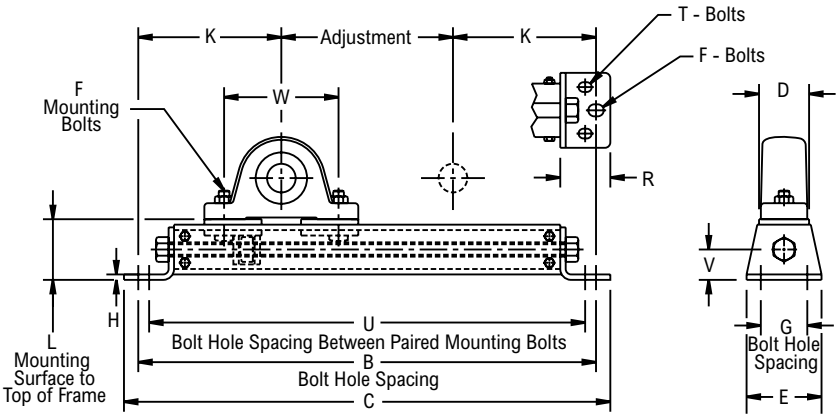

Product Features

- Bolted steel frames
- 2 or 4-bolt frame mounting
- Bolt hole centers adjustable
- Pillow blocks not included
- See Features and Benefits for additional info on pages 286 - 287.

Bearing Dimensions

Size Code	Adjust. Length	Part Number	Bolt Hole Spacing B Frame	Bolt Hole Spacing G Width Direction	Bolt Hole Spacing U Between Pairs	L Mouting Surface to Top of Frame	C	D	E	F Bolts	H	K	R	T Bolts	V	W min	W max	Approx. Weight
205	6	LC16	16	1 5/8	15 1/4	2 1/8	17	1 3/4	2 5/8	3/8	3/16	5	1 3/4	5/16	1 1/16	3	5 15/16	5.25
	9	LC19	19		18 1/4		20											6.30
	12	LC112	22		21 1/4		23											6.60
210	6	LC26	19 1/8	2 1/8	18 1/8	2 11/16	20 1/4	2 3/8	3 1/8	1/2	1/4	6 9/16	2 3/16	3/8	1 11/32	3 3/4	7 1/4	10.00
	9	LC29	22 1/8		21 1/8		23 1/4											10.20
	12	LC212	25 1/8		24 1/8		26 1/4											11.50
	18	LC218	31 1/8		30 1/8		32 1/4											13.80
211/212	9	LC39	25 5/16	2 3/4	24 1/16	3 5/16	26 9/16	3	4	5/8	5/16	8 5/32	2 3/4	1/2	1 5/8	4 1/4	9	20.40
	12	LC312	28 5/16		27 1/16		29 9/16											22.25
	18	LC318	34 5/16		33 1/16		35 9/16											26.50
	24	LC324	40 5/16		39 1/16		41 9/16											33.00

Additional Notes

Please call 1-866-REXNORD for availability
For pillow block dimensions, see Pillow Block Ball Bearing section
Note: Dimensions subject to change. Certified dimensions of ordered material furnished on request.

TP, TPT, TSP, TSPT

Photo Shows a T-Frame Protected Screw Take-up Frame for Ball Bearing Pillow Block Mounting

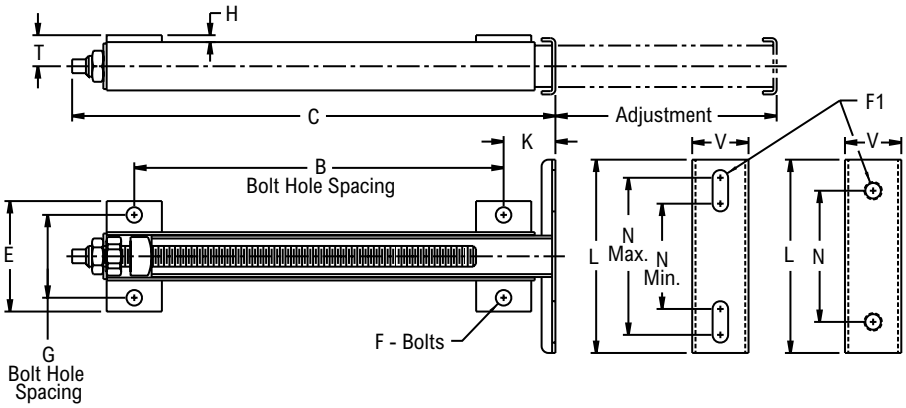

Product Features

- Protected screw T-frame take-up
- Mild steel or AISI 304 stainless steel frame
- Pillow block or tapped base pillow block mounting
- Pillow blocks not included
- See Features and Benefits for additional info on pages 286 - 287.

Bearing Dimensions

Size Code	Adjust. Length	Mild Steel		Stainless Steel		Bolt Hole Spacing		Mouting Plate Bolt Hole Spacing			C	E	F	F1	H	K	L	T	V	Adjust. Screw	
		Part Number	Approx. Weight	Part Number	Approx. Weight	B	G Width Direction	N	N min.	N max										Sq. Drive	Thread Size
Pillow Block Mounting																					
203-205	3	TP1003	3.00	TSP1003	2.60	3 9/16	2 5/8	-	2 15/16	4 5/16	6 7/8	1 1/2	3/8	3/8	1/4	1 1/2	5 1/4	3 11/16	7/8	3/8	5/8 - 11
	6	TP1006	4.00	TSP1006	3.50	7 1/16					10 3/8										
	9	TP1009	5.10	TSP1009	4.40	11 1/16					14 3/8										
206-209	12	TP25012	9.90	TSP25012	8.10	13 3/8	3	-	3 13/16	5 11/16	17 1/2	2 1/32	1/2	1/2	1/4	1 7/8	7	4	1 1/8	1/2	3/4 - 10
	3	TP2503	5.80	TSP2503	4.80	4 3/8					8 1/2										
	6	TP2506	7.10	TSP2506	5.80	7 3/8					11 1/2										
	9	TP2509	8.40	TSP2509	7.00	10 3/8					14 1/2										
210-212	12	TP30012	16.00	TSP30012	16.50	14 1/8	4	-	5 9/16	8 11/16	19 1/8	2 27/32	5/8	5/8	1/4	2 1/4	10	5 1/4	1 1/2	1/2	7/8 - 9
	18	TP30018	20.40	TSP30018	21.60	21 1/8					26 1/8										
	6	TP3006	11.00	TSP3006	11.40	6 1/8					11 1/8										
	9	TP3009	13.10	TSP3009	13.40	10 1/8					15 1/8										
213-217	12	TP40012	42.90	-	-	20	5 1/2	-	8 1/2	11 3/4	27 3/4	3 1/2	3/4	3/4	1/4	3 1/2	14	7 1/2	2 1/8	Pinned Nut	1 1/4 - 7
	18	TP40018	52.10	-	-	26					33 3/4										
	24	TP40024	61.30	-	-	32					39 3/4										
Tapped Base Pillow Block Mounting																					
204-205	3	TPT1003	3.00	TSPT1003	2.60	3 9/16	2 5/8	2	-	-	6 7/8	1 1/2	3/8	3/8	1/4	1 1/2	3	3 11/16	7/8	3/8	5/8 - 11
	6	TPT1006	4.00	TSPT1006	3.50	7 1/16					10 3/8										
	9	TPT1009	5.10	TSPT1009	4.40	11 1/16					14 3/8										
206	12	TPT250112	9.90	TSPT250112	8.10	13 3/8	3	3	-	-	17 1/2	1 1/2	1/2	7/16	1/4	1 7/8	4	4	1 1/8	1/2	3/4 - 10
	3	TPT25013	5.80	TSPT25013	4.80	4 3/8					8 1/2										
	6	TPT25016	7.10	TSPT25016	5.80	7 3/8					11 1/2										
	9	TPT25019	8.40	TSPT25019	7.00	10 3/8					14 1/2										
207	12	TPT250212	9.90	TSPT250212	8.10	13 3/8	3	3 1/4	-	-	17 1/2	2	1/2	1/2	1/4	1 7/8	4 1/4	4	1 1/8	1/2	3/4 - 10
	3	TPT25023	5.80	TSPT25023	4.80	4 3/8					8 1/2										
	6	TPT25026	7.10	TSPT25026	5.80	7 3/8					11 1/2										
	9	TPT25029	8.40	TSPT25029	7.00	10 3/8					14 1/2										
210	12	TPT250512	9.90	TSPT250512	8.10	13 3/8	3	4	-	-	17 1/2	2	1/2	5/8	1/4	1 7/8	5 1/2	4	1 1/8	1/2	3/4 - 10
	3	TPT25053	5.80	TSPT25053	4.80	4 3/8					8 1/2										
	6	TPT25056	7.10	TSPT25056	5.80	7 3/8					11 1/2										
	9	TPT25059	8.40	TSPT25059	7.00	10 3/8					14 1/2										

Additional Notes

Please call 1-866-REXNORD for availability

For pillow block dimensions, see Pillow Block Ball Bearing section

Note: Dimensions subject to change. Certified dimensions of ordered material furnished on request.

TQP

Photo Shows a T-Frame Quick Release Take-up Frame for Ball Bearing Pillow Block Mounting

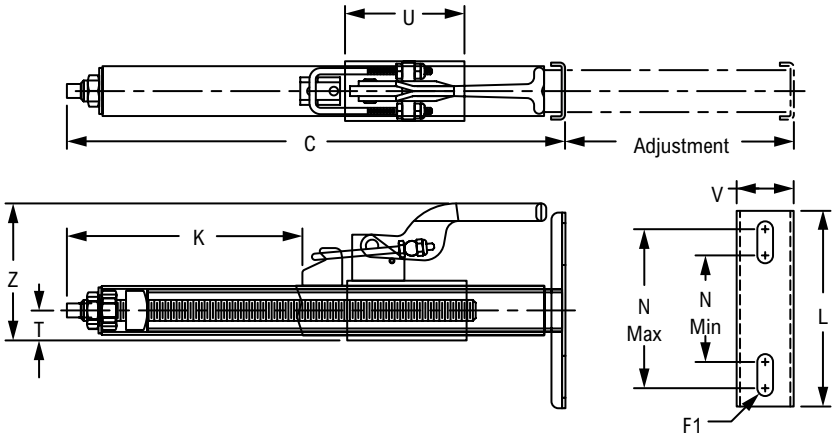

Product Features

Protected screw T-frame take-up
AISI 304 stainless steel frame
Pillow block mounting
Pillow blocks not included
See Features and Benefits for additional info on pages 286 - 287.

Bearing Dimensions

Size Code	Adjust. Length	Part Number	Bolt Hole Spacing		C	F1	K	L	T	U	V	Z	Adjust. Screw		Approx. Weight
			N min	N max									Sq Drive	Thread Size	
203-205	6	TQP1006	2 15/16	4 5/16	10 3/8	3/8	3 23/32	5 1/4	3/4	3	1 1/2	3 7/16	3/8	5/8 - 11	4.00
	9	TQP1009	2 15/16	4 5/16	14 3/8	3/8	5 23/32	5 1/4	3/4	5	1 1/2	3 7/16			5.00
206-209	6	TQP2506	3 13/16	5 11/16	11 1/2	1/2	1 9/16	7	1	4	2 1/32	4 7/8	1/2	3/4 - 10	7.00
	9	TQP2509	3 13/16	5 11/16	14 1/2	1/2	3 1/16	7	1	6	2 1/32	4 7/8			8.20
	12	TQP25012	3 13/16	5 11/16	17 1/2	1/2	4 9/16	7	1	8	2 1/32	4 7/8			9.50

Additional Notes

Please call 1-866-REXNORD for availability
For pillow block dimensions, see Pillow Block Ball Bearing section
Note: Dimensions subject to change. Certified dimensions of ordered material furnished on request.

HM3U200

Photo Shows a Screw Conveyor Hanger Ball Bearing Unit

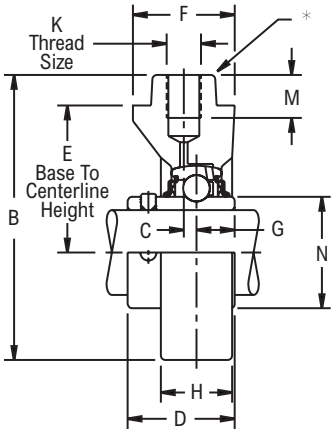

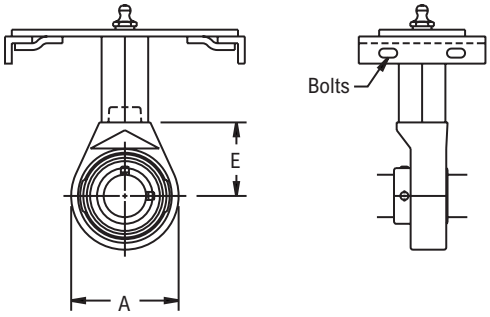

Typical Installation

Product Features

Corrosion-resistant powder coating
High test iron housing
Broad range of sealing options
Wide inner ring for increased shaft stability
Spring locking setscrew mount
Alignable & relubricatable
See Features and Benefits for additional info on pages 286 - 287.

Bearing Dimensions

Size Code	Shaft Diameter	Part Number	E Base to Centerline Height	K Thread Size	A	B	C	D	F	G	H	M	N	Approx. Weight
208	1 1/2	HM3U224N*Δ■	2 1/2	3/4-10 NC	3 7/8	5.19	0.218	1 29/32	1 3/4	0.7340	0.97	1.00	2.083	5.00
210	2	HM3U2E32N*Δ■	2 1/2	3/4-10 NC	4 3/8	5.44	0.170	2 3/32	1 3/4	0.8280	0.91	1.00	2.475	6.30
212	2 7/16	HM3U239N*Δ■	3 5/8	7/8-9 NC	5 1/4	7.00	0.310	2 1/2	2 1/2	0.9380	1.75	1.06	3.012	11.30
215	3	HM3U2E48N*Δ	3 5/8	7/8-9 NC	6 1/8	7.44	0.375	2 7/8	2 1/2	1.0620	2.00	1.06	3.624	12.90
217	3 7/16	HM3U255N*Δ	4 1/2	1 1/8-12 NF	7 1/2	9.25	0.344	3 9/16	3 9/16	1.4380	2.56	1.88	4.158	24.80

Additional Notes

Please call 1-866-REXNORD for availability
Size codes 208 & 210 to fit 1 1/4 in square tubing
Size codes 212 & 215 to fit 1 3/4 in square tubing
Size code 217 to fit 2 1/2 in square tubing
* N lip seals standard
■ Available with H labyrinth seals

Δ Available with E3 triple lip seals
For the Selection Guide, Load Ratings and Speed Limits, see the Link-Belt 200 Series Ball Bearing Engineering section on pages 290 - 298.
Note: Dimensions subject to change. Certified dimensions of ordered material furnished on request.

FF200

Photo Shows a 4-Bolt Ball Bearing Screw Conveyor Trough End Flanged Unit

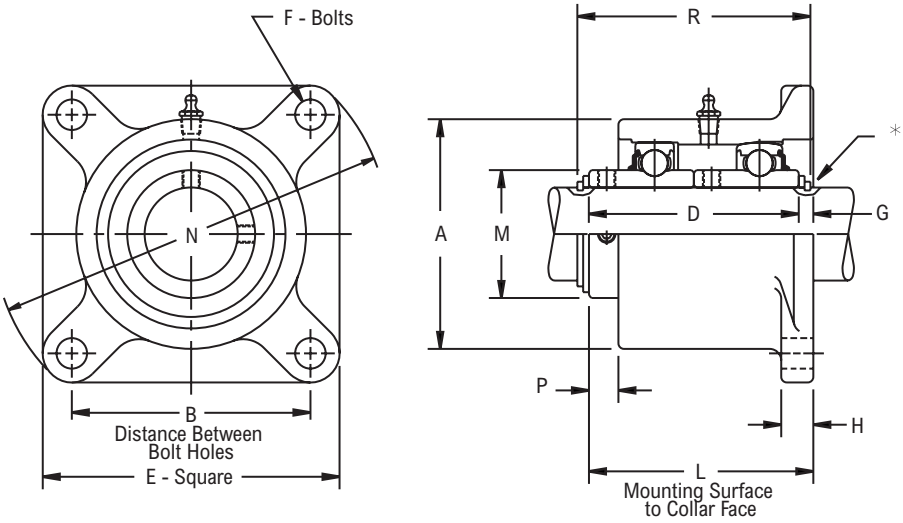

Product Features

- Corrosion-resistant powder coating
- Cast iron housing
- 2 ball bearing inserts in housing
- Spring locking setscrew mount
- Relubricatable
- See Features and Benefits for additional info on pages 286 - 287.

Bearing Dimensions

Size Code	Shaft Diameter	Part Number	Replacement Bearing Number	B Distance Between Bolt Holes	L Mouting Surface to Collar Face	A	D	E	F Bolts	G	H	M	N	P	R	Approx. Weight
208	1 1/2	FF224N*	UR224A	4	4 1/16	4	3 13/16	5 1/8	1/2	1/4	9/16	-	6 25/32	1/2	4 7/32	10.00
211	2	FF232N*	UR232A	5 1/8	4 13/16	4 15/16	4 1/2	6 3/8	5/8	5/16	11/16	-	8 1/2	5/8	5 1/32	17.40
	2 3/16	FF235N*	UR235A													
212	2 7/16	FF239N*	UR239A	5 5/8	5 5/16	5 3/8	5	6 7/8	5/8	5/16	11/16	-	9 7/32	19/32	5 17/32	20.80
215	2 3/4	FF244N*	UR244A	6	6 1/16	6 3/8	5 3/4	7 3/4	3/4	5/16	3/4	4 5/8	10 1/4	11/16	6 9/32	31.10
	2 15/16	FF247N*	UR247A													
	3	FF2E48N*	UR2E48A													
217	3 7/16	FF255N*	UR255A	6 3/4	7 5/8	7	7 1/8	8 9/16	3/4	1/2	1	5 3/16	11 3/8	3/4	7 23/32	50.20

Additional Notes

- Please call 1-866-REXNORD for availability
- Lubrication fitting tap size: for size codes 212 and below, 1/4 in PT: for all other size codes, 3/8 in PT
- Support thrust load (preferably in shear) with heavy duty snap ring and square face washer
- Includes two bearings with seals and inner ring setscrews or collar with setscrews

* N lip seals standard

For the Selection Guide, Load Ratings and Speed Limits, see the Link-Belt 200 Series Ball Bearing Engineering section on pages 290 - 298.

Note: Dimensions subject to change. Certified dimensions of ordered material furnished on request.

CLG200NL

Photo Shows an Unmounted Ball Bearing Unit

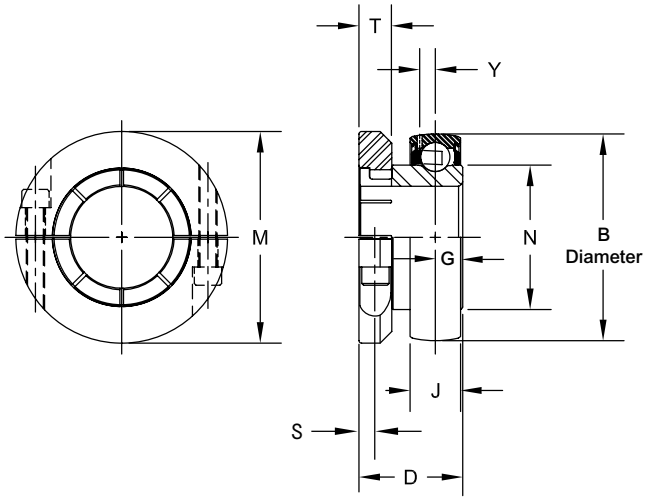

Product Features

- Broad range of sealing options
- Wide inner ring for increased shaft stability
- Spring locking setscrew mount
- Sealed & relubricatable
- Spherical O.D.
- See Features and Benefits for additional info on pages 286 - 287.

Bearing Dimensions

Size Code	Shaft Diameter	Spherical Part Number	Spherical J Outer Ring Width	B O.D.	D	G	M Collar O.D.	N	S	T Width	T Tap	Y	Approx. Weight
203	1/2	CLG2B08NL*■	0.5118	1.5748	1 5/32	0.4531	1 5/8	0.941	0.15	9/32	#8-32	0.158	0.25
	5/8	CLG210NL*■											
	11/16	CLG211NL*■											
	17.00	*CLG2M17NL*■*	*13.0000*	*40.0000*	*29.37*	*11.5090*	*41.28*	*23.900*	*3.80*			*4.010*	*0.10*
204	3/4	CLG212NL*■	0.5906	1.8504	1 5/16	0.5313	2 1/16	1.121	0.19	23/64	#10-32	0.176	0.50
	20.00	*CLG2M20NL*■*	*15.0000*	*47.0000*	*33.34*	*13.4940*	*52.39*	*28.470*	*4.80*			*4.470*	*0.20*
205	7/8	CLG214NL*Δ■	0.5906	2.0472	1 29/64	0.5625	2 13/64	1.313	0.22	23/64	#10-32	0.176	0.50
	15/16	CLG215NL*Δ■											
	1	CLG216NL*Δ■											
	25.00	*CLG2M25NL*Δ■*	*15.0000*	*52.0000*	*36.91*	*14.2880*	*55.96*	*33.350*	*5.60*			*4.470*	*0.20*
206	1 1/8	CLG218NL*Δ■	0.7087	2.4409	1 17/32	0.6094	2 19/32	1.587	0.22	23/64	#10-32	0.202	0.80
	1 3/16	CLG219NL*Δ■											
	1 1/4	CLG2E20NL*Δ■											
	30.00	*CLG2M30NL*Δ■*	*18.0000*	*62.0000*	*38.89*	*15.4780*	*65.88*	*40.310*	*5.60*			*5.130*	*0.35*
207	1 1/4	CLG220NL*Δ■	0.7480	2.8346	1 47/64	0.6563	3 3/64	1.847	0.25	7/16	#1/4-28	0.239	1.20
	1 3/8	CLG222NL*Δ■											
	1 7/16	CLG223NL*Δ■											
	35.00	*CLG2M35NL*Δ■*	*19.0000*	*72.0000*	*44.05*	*16.6690*	*77.39*	*46.910*	*6.40*			*6.070*	*0.55*
208	1 1/2	CLG224NL*Δ■	0.8661	3.1496	1 31/32	0.7344	3 3/16	2.083	0.32	7/16	#1/4-28	0.253	1.50
	40.00	*CLG2M40NL*Δ■*	*22.0000*	*80.0000*	*50.01*	*18.6530*	*80.96*	*52.910*	*8.10*			*6.430*	*0.70*
209	1 5/8	CLG226NL*Δ■	0.8661	3.3465	1 31/32	0.7969	3 3/8	2.281	0.32	7/16	#1/4-28	0.254	2.00
	1 11/16	CLG227NL*Δ■											
	1 3/4	CLG228NL*Δ■											
	45.00	*CLG2M45NL*Δ■*	*22.0000*	*85.0000*	*50.01*	*20.2410*	*85.73*	*57.940*	*8.10*			*6.450*	*0.90*
210	1 15/16	CLG231NL*Δ■	0.8661	3.5433	2 5/64	0.8281	3 3/4	2.475	0.38	9/16	#3/8-24	0.268	2.20
	2	CLG2E32NL*Δ■											
	50.00	*CLG2M50NL*Δ■*	*22.0000*	*90.0000*	*52.78*	*21.0340*	*95.25*	*62.860*	*9.60*			*6.810*	*1.00*

Continued...

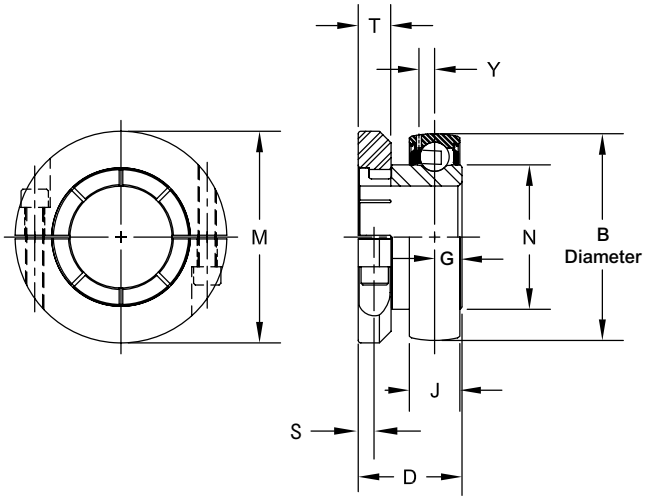

Continued...

Bearing Dimensions

Size Code	Shaft Diameter	Spherical Part Number	Spherical J Outer Ring Width	B O.D.	D	G	M Collar O.D.	N	S	T Width	T Tap	Y	Approx. Weight
211	2	CLG232NL*Δ■	0.9843	3.9370	2 15/64	0.8438	4 5/64	2.749	0.38	9/16	#3/8-24	0.295	2.40
	2 3/16	CLG235NL*Δ■											
	55.00	*CLG2M55NL*Δ■*	*25.0000*	*100.0000*	*56.75*	*21.4310*	*103.58*	*69.820*	*9.60*			*7.490*	*1.10*
212	2 1/4	CLG236NL*Δ■	1.0630	4.3307	2 19/32	0.9375	4 9/32	3.012	0.38	9/16	#3/8-24	0.330	3.40
	2 3/8	CLG238NL*Δ■											
	2 7/16	CLG239NL*Δ■											
	60.00	*CLG2M60NL*Δ■*	*27.0000*	*110.0000*	*65.88*	*23.8130*	*108.74*	*76.500*	*9.60*	3/4	#3/8-24	*8.380*	*1.50*
213	2 1/2	CLG240NL*Δ	1.0630	4.7244	2 3/4	1.0000	4 51/64	3.331	-			0.343	5.80
	2 11/16	CLG243NL*Δ											
	65.00	*CLG2M65NL*Δ*	*27.0000*	*120.0000*	*69.85*	*25.4000*	*121.84*	*84.610*	*-*			*8.710*	*2.60*
215	2 3/4	CLG244NL*Δ	1.1417	5.1181	2 59/64	1.0625	5 1/4	3.624	-	3/4	#3/8-24	0.367	7.30
	2 15/16	CLG247NL*Δ											
	3	CLG2E48NL*Δ											
	75.00	*CLG2M75NL*Δ*	*29.0000*	*130.0000*	*74.22*	*26.9870*	*133.35*	*92.050*	*-*			*9.320*	*3.30*
217	3 7/16	CLG255NL*Δ	1.3386	5.9055	3 39/64	1.4375	5 23/32	4.158	-	3/4	#3/8-24	0.415	9.50
	3 1/2	CLG2E56NL*Δ											
	85.00	*CLG2M85NL*Δ*	*34.0000*	*150.0000*	*91.68*	*36.5130*	*145.26*	*105.610*	*-*			*10.540*	*4.30*
220	3 15/16	CLG263NL*	1.5748	7.0866	4 7/64	1.6719	6 1/2	4.913	-	3/4	#3/8-24	0.504	16.00
	4	CLG2E64NL*											
	100.00	*CLG2M100NL**	*40.0000*	*180.0000*	*104.38*	*42.4660*	*165.10*	*124.790*	*-*			*12.800*	*7.20*

Additional Notes

Please call 1-866-REXNORD for availability

Bearing O.D. tolerance for size code 208 and below, +.0000 in/-.0005 in
(+0.000 mm/-0.013 mm)

Bearing O.D. tolerance for size codes 209 thru 214, +.0000 in/-.0006 in
(+0.000 mm/-0.015 mm)

Bearing O.D. tolerance for size codes 215 thru 217, +.0000 in/-.0008 in
(+0.000 mm/-0.020 mm)

Bearing O.D. tolerance for all other size codes, +.0000 in/-.0010 in
(+0.000 mm/-0.025 mm)

* N lip seals with flingers standard

■ Available with H labyrinth seals

Δ Available with E3 triple lip seals

For the Selection Guide, Load Ratings and Speed Limits, see the Link-Belt 200 Series Ball Bearing Engineering section on pages 290 - 298.

Note: Dimensions subject to change. Certified dimensions of ordered material furnished on request.

Y200, YB200

Photo Shows an Unmounted Ball Bearing Unit

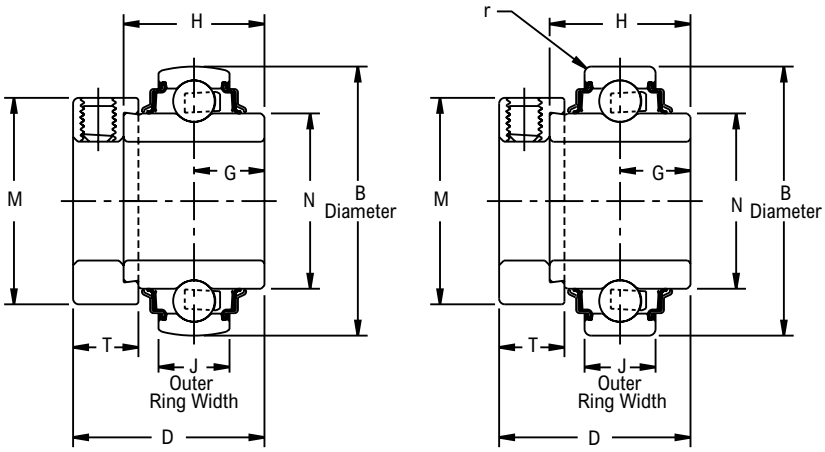

Product Features

- Broad range of sealing options
- Wide inner ring for increased shaft stability
- Eccentric cam locking device
- Sealed & non-relubricatable
- Spherical or Cylindrical O.D.
- See Features and Benefits for additional info on pages 286 - 287.

Bearing Dimensions

Size Code	Shaft Diameter	Cylindrical Part Number	Cylindrical J Outer Ring Width	Spherical Part Number	Spherical J Outer Ring Width	B O.D.	D	G	H	M	N	r	T	Approx. Weight
203	1/2	YB2B08NL*■	0.4724	Y2B08NL*■	0.5118	1.5748	1 15/32	0.5469	1.0938	1 1/8	0.941	0.024	17/32	0.30
	5/8	YB210NL*■		Y210NL*■										
	11/16	YB211NL*■		Y211NL*■										
204	3/4	YB212NL*■	0.5512	Y212NL*■	0.5906	1.8504	1 23/32	0.6719	1.3438	1 5/16	1.121	0.039	17/32	0.50
205	7/8	YB214NL*Δ■	0.5906	Y214NL*Δ■	0.5906	2.0472	1 3/4	0.6875	1.3750	1 1/2	1.313	0.039	17/32	0.70
	15/16	YB215NL*Δ■		Y215NL*Δ■										
	1	YB216NL*Δ■		Y216NL*Δ■										
206	1 1/8	YB218NL*Δ■	0.6299	Y218NL*Δ■	0.7087	2.4409	1 29/32	0.7188	1.4375	1 3/4	1.587	0.039	5/8	0.90
	1 3/16	YB219NL*Δ■		Y219NL*Δ■										
	1 1/4	YB2E20NL*Δ■		Y2E20NL*Δ■										
207	1 1/4	YB220NL*Δ■	0.6693	Y220NL*Δ■	0.7480	2.8346	2 1/64	0.7422	1.4844	2 3/16	1.847	0.039	11/16	1.55
	1 3/8	YB222NL*Δ■		Y222NL*Δ■										
	1 7/16	YB223NL*Δ■		Y223NL*Δ■										
208	1 1/2	YB224NL*Δ■	0.7087	Y224NL*Δ■	0.8661	3.1496	2 7/32	0.8438	1.6875	2 3/8	2.083	0.039	23/32	1.90
209	1 5/8	YB226NL*Δ■	0.7480	Y226NL*Δ■	0.8661	3.3465	2 7/32	0.8438	1.6875	2 1/2	2.281	0.039	23/32	2.10
	1 11/16	YB227NL*Δ■		Y227NL*Δ■										
	1 3/4	YB228NL*Δ■		Y228NL*Δ■										
210	1 15/16	YB231NL*Δ■	0.7874	Y231NL*Δ■	0.8661	3.5433	2 15/32	0.9688	1.9375	2 3/4	2.475	0.039	23/32	2.10
	2	YB2E32NL*Δ■		Y2E32NL*Δ■										
211	2	YB232NL*Δ■	0.8268	Y232NL*Δ■	0.9843	3.9370	2 13/16	1.0938	2.1875	3	2.749	0.059	13/16	3.40
	2 3/16	YB235NL*Δ■		Y235NL*Δ■										
212	2 1/4	YB236NL*Δ■	0.8661	Y236NL*Δ■	1.0630	4.3307	3 1/16	1.2188	2.4375	3 1/4	3.012	0.059	7/8	3.80
	2 3/8	YB238NL*Δ■		Y238NL*Δ■										
	2 7/16	YB239NL*Δ■		Y239NL*Δ■										

Additional Notes

Please call 1-866-REXNORD for availability

Dimension "r", max fillet radius of housing to clear bearing corner

Bearing O.D. tolerance for size code 208 and below, +.0000 in/-.0005 in *(+0.000 mm/-0.013 mm)*: for all other size codes, +.0000 in/-.0006 in *(+0.000 mm/-0.015 mm)*

* N lip seals standard

■ Available with H labyrinth seals

Δ Available with E3 triple lip seals

For the Selection Guide, Load Ratings and Speed Limits, see the Link-Belt 200 Series Ball Bearing Engineering section on pages 290 - 298.

Note: Dimensions subject to change. Certified dimensions of ordered material furnished on request.

YG200, YBG200

Photo Shows an Unmounted Ball Bearing Unit

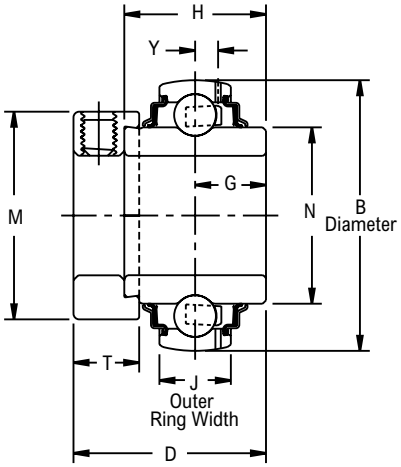

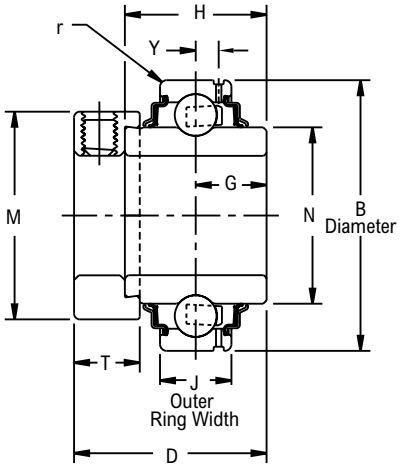

Product Features

- Broad range of sealing options
- Wide inner ring for increased shaft stability
- Eccentric cam locking device
- Sealed & relubricatable
- Spherical or Cylindrical O.D.
- See Features and Benefits for additional info on pages 286 - 287.

Bearing Dimensions

Size Code	Shaft Diameter	Cylindrical		Spherical		B O.D.	D	G	H	M	N	r	T	Y	Approx. Weight
		Part Number	J Outer Ring Width	Part Number	J Outer Ring Width										
203	1/2	YBG2B08NL*■	0.4724	YG2B08NL*■	0.5118	1.5748	1 15/32	0.5469	1.0938	1 1/8	0.941	0.024	17/32	0.158	0.30
	5/8	YBG210NL*■		YG210NL*■											
	11/16	YBG211NL*■		YG211NL*■											
204	3/4	YBG212NL*■	0.5512	YG212NL*■	0.5906	1.8504	1 23/32	0.6719	1.3438	1 5/16	1.121	0.039	17/32	0.176	0.50
205	7/8	YBG214NL*Δ■	0.5906	YG214NL*Δ■	0.5906	2.0472	1 3/4	0.6875	1.3750	1 1/2	1.313	0.039	17/32	0.176	0.70
	15/16	YBG215NL*Δ■		YG215NL*Δ■											
	1	YBG216NL*Δ■		YG216NL*Δ■											
206	1 1/8	YBG218NL*Δ■	0.7087	YG218NL*Δ■	0.7087	2.4409	1 29/32	0.7188	1.4375	1 3/4	1.587	0.039	5/8	0.202	0.90
	1 3/16	YBG219NL*Δ■		YG219NL*Δ■											
	1 1/4	YBG2E20NL*Δ■		YG2E20NL*Δ■											
207	1 1/4	YBG220NL*Δ■	0.7480	YG220NL*Δ■	0.7480	2.8346	2 1/64	0.7422	1.4844	2 3/16	1.847	0.039	11/16	0.239	1.55
	1 3/8	YBG222NL*Δ■		YG222NL*Δ■											
	1 7/16	YBG223NL*Δ■		YG223NL*Δ■											
208	1 1/2	YBG224NL*Δ■	0.8268	YG224NL*Δ■	0.8661	3.1496	2 7/32	0.8438	1.6875	2 3/8	2.083	0.039	23/32	0.253	1.90
209	1 5/8	YBG226NL*Δ■	0.8661	YG226NL*Δ■	0.8661	3.3465	2 7/32	0.8438	1.6875	2 1/2	2.281	0.039	23/32	0.254	2.10
	1 11/16	YBG227NL*Δ■		YG227NL*Δ■											
	1 3/4	YBG228NL*Δ■		YG228NL*Δ■											
210	1 15/16	YBG231NL*Δ■	0.9055	YG231NL*Δ■	0.8661	3.5433	2 15/32	0.9688	1.9375	2 3/4	2.475	0.039	23/32	0.268	2.10
	2	YBG2E32NL*Δ■		YG2E32NL*Δ■											
211	2	YBG232NL*Δ■	0.9843	YG232NL*Δ■	0.9843	3.9370	2 13/16	1.0938	2.1875	3	2.749	0.059	13/16	0.295	3.40
	2 3/16	YBG235NL*Δ■		YG235NL*Δ■											
212	2 1/4	YBG236NL*Δ■	1.0630	YG236NL*Δ■	1.0630	4.3307	3 1/16	1.2188	2.4375	3 1/4	3.012	0.059	7/8	0.330	3.80
	2 3/8	YBG238NL*Δ■		YG238NL*Δ■											
	2 7/16	YBG239NL*Δ■		YG239NL*Δ■											

Additional Notes

Please call 1-866-REXNORD for availability

Dimension "r", max fillet radius of housing to clear bearing corner

Bearing O.D. tolerance for size code 208 and below, +.0000 in/-.0005 in *(+0.000 mm/ -0.013 mm)*: for all other size codes, +.0000 in/-.0006 in *(+0.000 mm/-0.015 mm)*

* N lip seals standard

■ Available with H labyrinth seals

Δ Available with E3 triple lip seals

For the Selection Guide, Load Ratings and Speed Limits, see the Link-Belt 200 Series Ball Bearing Engineering section on pages 290 - 298.

Note: Dimensions subject to change. Certified dimensions of ordered material furnished on request.

U200, UB200

Photo Shows an Unmounted Ball Bearing Unit

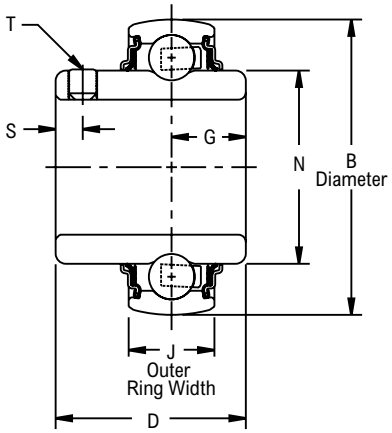

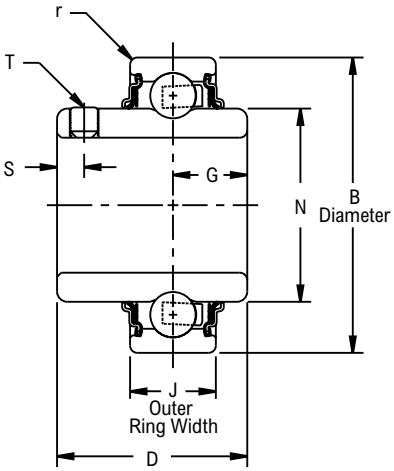

Product Features

- Broad range of sealing options
- Wide inner ring for increased shaft stability
- Spring locking setscrew mount
- Sealed & non-relubricatable
- Spherical or Cylindrical O.D.
- See Features and Benefits for additional info on pages 286 - 287.

Bearing Dimensions

Size Code	Shaft Diameter	Cylindrical Part Number	Cylindrical J Outer Ring Width	Spherical Part Number	Spherical J Outer Ring Width	B O.D.	D	G	N	r	S	T	Approx. Weight
203	1/2	UB2B08NL*■	0.4724	U2B08NL*■	0.5118	1.5748	1 3/32	0.4531	0.941	0.024	0.15	#10-32	0.25
	5/8	UB210NL*■		U210NL*■									
	11/16	UB211NL*■		U211NL*■									
	17.00	*UB2M17NL*■*	*12.0000*	*U2M17NL*■*	*13.0000*	*40.0000*	*27.78*	*11.5090*	*23.900*	*0.610*	*3.80*	*#10-32*	*0.10*
204	3/4	UB212NL*■	0.5512	U212NL*■	0.5906	1.8504	1 9/32	0.5313	1.121	0.039	0.19	#1/4-28	0.50
	20.00	*UB2M20NL*■*	*14.0000*	*U2M20NL*■*	*15.0000*	*47.0000*	*32.54*	*13.4940*	*28.470*	*1.000*	*4.80*	*#1/4-28*	*0.20*
205	7/8	UB214NL*Δ■	0.5906	U214NL*Δ■	0.5906	2.0472	1 23/64	0.5625	1.313	0.039	0.22	#1/4-28	0.50
	15/16	UB215NL*Δ■		U215NL*Δ■									
	1	UB216NL*Δ■		U216NL*Δ■									
	25.00	*UB2M25NL*Δ■*	*15.0000*	*U2M25NL*Δ■*	*15.0000*	*52.0000*	*34.53*	*14.2880*	*33.350*	*1.000*	*5.60*	*#1/4-28*	*0.20*
206	1 1/8	UB218NL*Δ■	0.6299	U218NL*Δ■	0.7087	2.4409	1 9/16	0.6094	1.587	0.039	0.22	#1/4-28	0.80
	1 3/16	UB219NL*Δ■		U219NL*Δ■									
	1 1/4	UB2E20NL*Δ■		U2E20NL*Δ■									
	30.00	*UB2M30NL*Δ■*	*16.0000*	*U2M30NL*Δ■*	*18.0000*	*62.0000*	*39.69*	*15.4780*	*40.310*	*1.000*	*5.60*	*#1/4-28*	*0.35*
207	1 1/4	UB220NL*Δ■	0.6693	U220NL*Δ■	0.7480	2.8346	1 49/64	0.6563	1.847	0.039	0.25	#5/16-24	1.20
	1 3/8	UB222NL*Δ■		U222NL*Δ■									
	1 7/16	UB223NL*Δ■		U223NL*Δ■									
	35.00	*UB2M35NL*Δ■*	*17.0000*	*U2M35NL*Δ■*	*19.0000*	*72.0000*	*44.85*	*16.6690*	*46.910*	*1.000*	*6.40*	*#5/16-24*	*0.55*
208	1 1/2	UB224NL*Δ■	0.7087	U224NL*Δ■	0.8661	3.1496	1 29/32	0.7344	2.083	0.039	0.32	#5/16-24	1.50
	40.00	*UB2M40NL*Δ■*	*18.0000*	*U2M40NL*Δ■*	*22.0000*	*80.0000*	*48.42*	*18.6530*	*52.910*	*1.000*	*8.10*	*#5/16-24*	*0.70*
209	1 5/8	UB226NL*Δ■	0.7480	U226NL*Δ■	0.8661	3.3465	2 1/32	0.7969	2.281	0.039	0.32	#5/16-24	2.00
	1 11/16	UB227NL*Δ■		U227NL*Δ■									
	1 3/4	UB228NL*Δ■		U228NL*Δ■									
	45.00	*UB2M45NL*Δ■*	*19.0000*	*U2M45NL*Δ■*	*22.0000*	*85.0000*	*51.59*	*20.2410*	*57.940*	*1.000*	*8.10*	*#5/16-24*	*0.90*
210	1 15/16	UB231NL*Δ■	0.7874	U231NL*Δ■	0.8661	3.5433	2 3/32	0.8261	2.475	0.039	0.38	#3/8-24	2.20
	2	UB2E32NL*Δ■		U2E32NL*Δ■									
	50.00	*UB2M50NL*Δ■*	*20.0000*	*U2M50NL*Δ■*	*22.0000*	*90.0000*	*53.18*	*21.0340*	*62.860*	*1.000*	*9.60*	*#3/8-24*	*1.00*
211	2	UB232NL*Δ■	0.8268	U232NL*Δ■	0.9843	3.9370	2 1/4	0.8438	2.749	0.059	0.38	#3/8-24	2.40
	2 3/16	UB235NL*Δ■		U235NL*Δ■									
	55.00	*UB2M55NL*Δ■*	*21.0000*	*U2M55NL*Δ■*	*25.0000*	*100.0000*	*57.15*	*21.4310*	*69.820*	*1.500*	*9.60*	*#3/8-24*	*1.10*
212	2 1/4	UB236NL*Δ■	0.8661	U236NL*Δ■	1.0630	4.3307	2 1/2	0.9375	3.012	0.059	0.38	#3/8-24	3.40
	2 3/8	UB238NL*Δ■		U238NL*Δ■									
	2 7/16	UB239NL*Δ■		U239NL*Δ■									
	60.00	*UB2M60NL*Δ■*	*22.0000*	*U2M60NL*Δ■*	*27.0000*	*110.0000*	*63.50*	*23.8130*	*76.500*	*1.500*	*9.60*	*#3/8-24*	*1.50*

Additional Notes

Please call 1-866-REXNORD for availability

Dimension "r", max fillet radius of housing to clear bearing corner

Bearing O.D. tolerance for size code 208 and below, +.0000 in/-.0005 in *(+0.000 mm/-0.013 mm)*: for all other size codes, +.0000 in/-.0006 in *(+0.000 mm/-0.015 mm)*

* N lip seals standard

■ Available with H labyrinth seals

Δ Available with E3 triple lip seals

For the Selection Guide, Load Ratings and Speed Limits, see the Link-Belt 200 Series Ball Bearing Engineering section on pages 290 - 298.

Note: Dimensions subject to change. Certified dimensions of ordered material furnished on request.

UG200, UBG200

Photo Shows an Unmounted Ball Bearing Unit

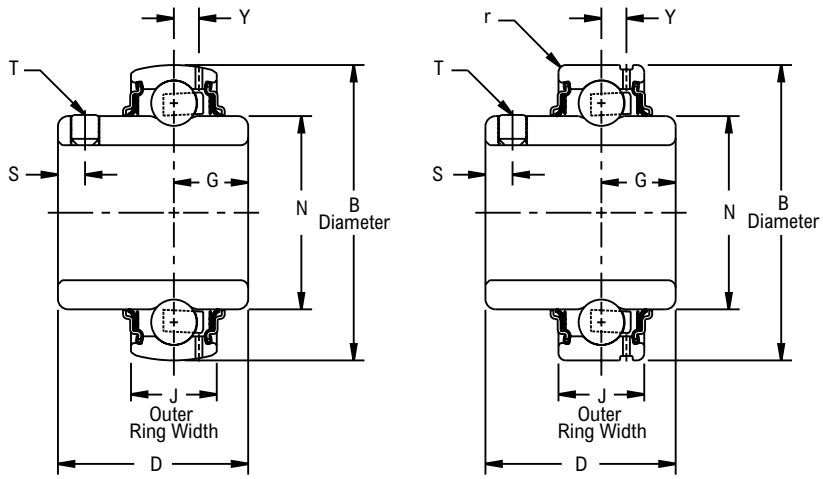

Product Features

- Broad range of sealing options
- Wide inner ring for increased shaft stability
- Spring locking setscrew mount
- Sealed & relubricatable
- Spherical or Cylindrical O.D.
- See Features and Benefits for additional info on pages 286 - 287.

Bearing Dimensions

Size Code	Shaft Diameter	Cylindrical Part Number	Cylindrical J Outer Ring Width	Spherical Part Number	Spherical J Outer Ring Width	B O.D.	D	G	M	N	r	S	T	Y	Approx. Weight
203	1/2	UBG2B08NL*■	0.4724	UG2B08NL*■	0.5118	1.5748	1 3/32	0.4531	-	0.941	0.024	0.15	#10-32	0.158	0.25
	5/8	UBG210NL*■		UG210NL*■											
	11/16	UBG211NL*■		UG211NL*■											
	17.00	*UBG2M17NL*■*	*12.0000*	*UG2M17NL*■*	*13.0000*	*40.0000*	*27.78*	*11.5090*	*-*	*23.900*	*0.610*	*3.80*	*#10-32*	*4.010*	*0.10*
204	3/4	UBG212NL*■	0.5512	UG212NL*■	0.5906	1.8504	1 9/32	0.5313	-	1.121	0.039	0.19	#1/4-28	0.176	0.50
	20.00	*UBG2M20NL*■*	*14.0000*	*UG2M20NL*■*	*15.0000*	*47.0000*	*32.54*	*13.4940*	*-*	*28.470*	*1.000*	*4.80*	*#1/4-28*	*4.470*	*0.20*
205	7/8	UBG214NL*Δ■	0.5906	UG214NL*Δ■	0.5906	2.0472	1 23/64	0.5625	-	1.313	0.039	0.22	#1/4-28	0.176	0.50
	15/16	UBG215NL*Δ■		UG215NL*Δ■											
	1	UBG216NL*Δ■		UG216NL*Δ■											
	25.00	*UBG2M25NL*Δ■*	*15.0000*	*UG2M25NL*Δ■*	*15.0000*	*52.0000*	*34.53*	*14.2880*	*-*	*33.350*	*1.000*	*5.60*	*#1/4-28*	*4.470*	*0.20*
206	1 1/8	UBG218NL*Δ■	0.7087	UG218NL*Δ■	0.7087	2.4409	1 9/16	0.6094	-	1.587	0.039	0.22	#1/4-28	0.202	0.80
	1 3/16	UBG219NL*Δ■		UG219NL*Δ■											
	1 1/4	UBG2E20NL*Δ■		UG2E20NL*Δ■											
	30.00	*UBG2M30NL*Δ■*	*18.0000*	*UG2M30NL*Δ■*	*18.0000*	*62.0000*	*39.69*	*15.4780*	*-*	*40.310*	*1.000*	*5.60*	*#1/4-28*	*5.130*	*0.35*
207	1 1/4	UBG220NL*Δ■	0.7480	UG220NL*Δ■	0.7480	2.8346	1 49/64	0.6563	-	1.847	0.039	0.25	#5/16-24	0.239	1.20
	1 3/8	UBG222NL*Δ■		UG222NL*Δ■											
	1 7/16	UBG223NL*Δ■		UG223NL*Δ■											
	35.00	*UBG2M35NL*Δ■*	*19.0000*	*UG2M35NL*Δ■*	*19.0000*	*72.0000*	*44.85*	*16.6690*	*-*	*46.910*	*1.000*	*6.40*	*#5/16-24*	*6.070*	*0.55*
208	1 1/2	UBG224NL*Δ■	0.8268	UG224NL*Δ■	0.8661	3.1496	1 29/32	0.7344	-	2.083	0.039	0.32	#5/16-24	0.253	1.50
	40.00	*UBG2M40NL*Δ■*	*21.0000*	*UG2M40NL*Δ■*	*22.0000*	*80.0000*	*48.42*	*18.6530*	*-*	*52.910*	*1.000*	*8.10*	*#5/16-24*	*6.430*	*0.70*
209	1 5/8	UBG226NL*Δ■	0.8661	UG226NL*Δ■	0.8661	3.3465	2 1/32	0.7969	-	2.281	0.039	0.32	#5/16-24	0.254	2.00
	1 11/16	UBG227NL*Δ■		UG227NL*Δ■											
	1 3/4	UBG228NL*Δ■		UG228NL*Δ■											
	45.00	*UBG2M45NL*Δ■*	*22.0000*	*UG2M45NL*Δ■*	*22.0000*	*85.0000*	*51.59*	*20.2410*	*-*	*57.940*	*1.000*	*8.10*	*#5/16-24*	*6.450*	*0.90*
210	1 15/16	UBG231NL*Δ■	0.9055	UG231NL*Δ■	0.8661	3.5433	2 3/32	0.8281	-	2.475	0.039	0.38	#3/8-24	0.268	2.20
	2	UBG2E32NL*Δ■		UG2E32NL*Δ■											
	50.00	*UBG2M50NL*Δ■*	*23.0000*	*UG2M50NL*Δ■*	*22.0000*	*90.0000*	*53.18*	*21.0340*	*-*	*62.860*	*1.000*	*9.60*	*#3/8-24*	*6.810*	*1.00*
211	2	UBG232NL*Δ■	0.9843	UG232NL*Δ■	0.9843	3.9370	2 1/4	0.8438	-	2.749	0.059	0.38	#3/8-24	0.295	2.40
	2 3/16	UBG235NL*Δ■		UG235NL*Δ■											
	55.00	*UBG2M55NL*Δ■*	*25.0000*	*UG2M55NL*Δ■*	*25.0000*	*100.0000*	*57.15*	*21.4310*	*-*	*69.820*	*1.500*	*9.60*	*#3/8-24*	*7.490*	*1.10*
212	2 1/4	UBG236NL*Δ■	1.0630	UG236NL*Δ■	1.0630	4.3307	2 1/2	0.9375	-	3.012	0.059	0.38	#3/8-24	0.330	3.40
	2 3/8	UBG238NL*Δ■		UG238NL*Δ■											
	2 7/16	UBG239NL*Δ■		UG239NL*Δ■											
	60.00	*UBG2M60NL*Δ■*	*27.0000*	*UG2M60NL*Δ■*	*27.0000*	*110.0000*	*63.50*	*23.8130*	*-*	*76.500*	*1.500*	*9.60*	*#3/8-24*	*8.380*	*1.50*

Continued...

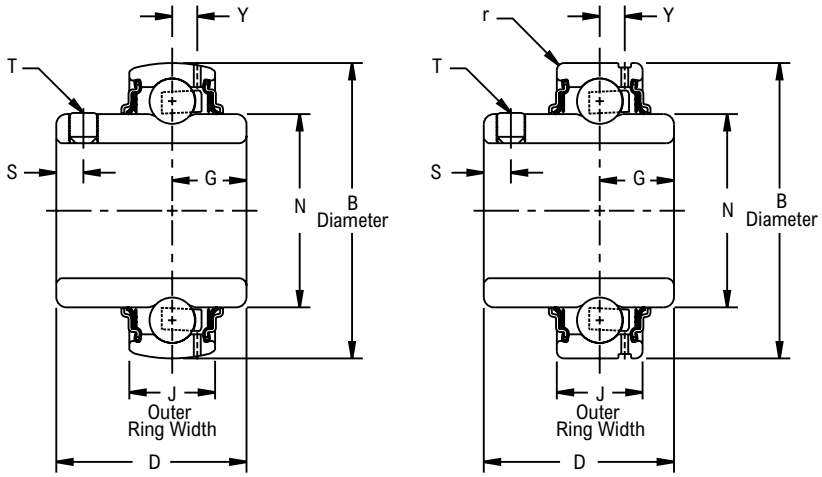

Continued...

Bearing Dimensions

Size Code	Shaft Diameter	Cylindrical Part Number	Cylindrical J Outer Ring Width	Spherical Part Number	Spherical J Outer Ring Width	B O.D.	D	G	M	N	r	S	T	Y	Approx. Weight
213	2 1/2	-	-	UG240NL*Δ	1.0630	4.7244	2 11/16	1.0000	4 3/16	3.331	-	-	-	0.343	5.80
	2 11/16	-	-	UG243NL*Δ											
	65.00	*-*	*-*	*UG2M65NL*Δ*	*27.0000*	*120.0000*	*68.26*	*25.4000*	*106.40*	*84.610*	*-*	*-*	*-*	*8.710*	*2.60*
215	2 3/4	-	-	UG244NL*Δ	1.1417	5.1181	2 7/8	1.0625	4 5/8	3.624	-	-	-	0.367	7.30
	2 15/16	-	-	UG247NL*Δ											
	3	-	-	UG2E48NL*Δ											
	75.00	*-*	*-*	*UG2M75NL*Δ*	*29.0000*	*130.0000*	*73.02*	*26.9870*	*117.50*	*92.050*	*-*	*-*	*-*	*9.320*	*3.30*
217	3 7/16	-	-	UG255NL*Δ	1.3386	5.9055	3 9/16	1.4375	5 3/16	4.158	-	-	-	0.415	9.50
	3 1/2	-	-	UG2E56NL*Δ											
	85.00	*-*	*-*	*UG2M85NL*Δ*	*34.0000*	*150.0000*	*90.49*	*36.5130*	*131.80*	*105.610*	*-*	*-*	*-*	*10.540*	*4.30*
220	3 15/16	-	-	UG263NL*	1.5748	7.0866	4 1/4	1.6719	5 15/16	4.913	-	-	-	0.504	16.00
	4	-	-	UG2E64NL*											
	100.00	*-*	*-*	*UG2M100NL**	*40.0000*	*180.0000*	*107.95*	*42.4660*	*150.80*	*124.790*	*-*	*-*	*-*	*12.800*	*7.20*

Additional Notes

Please call 1-866-REXNORD for availability
Bearing O.D. tolerance for size code 208 and below,
+.0000 in/-.0005 in *(+0.000 mm/-0.013 mm)*
Bearing O.D. tolerance for size codes 209 thru 214,
+.0000 in/-.0006 in *(+0.000 mm/-0.015 mm)*
Bearing O.D. tolerance for size codes 215 thru 217,
+.0000 in/-.0008 in *(+0.000 mm/-0.020 mm)*
Bearing O.D. tolerance for all other size codes,
+.0000 in/-.0010 in *(+0.000 mm/-0.025 mm)*

Dimension "r", max fillet radius of housing to clear bearing corner
* N lip seals standard
■ Available with H labyrinth seals
Δ Available with E3 triple lip seals
For the Selection Guide, Load Ratings and Speed Limits, see the Link-Belt 200 Series Ball Bearing Engineering section on pages 290 - 298.
Note: Dimensions subject to change. Certified dimensions of ordered material furnished on request.

W200, WB200

Photo Shows an Unmounted Ball Bearing Unit

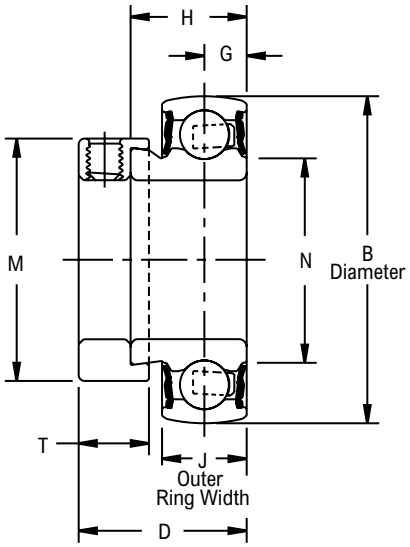

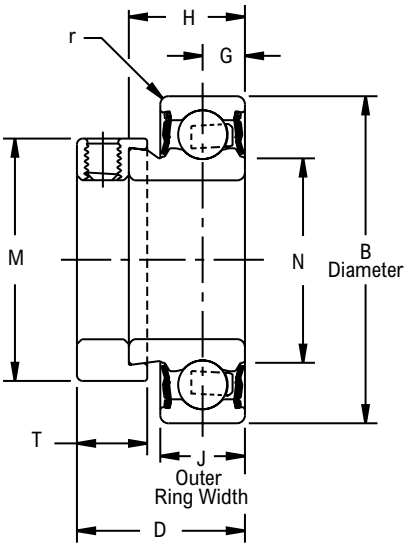

Product Features

Eccentric cam locking device
Sealed & non-relubricatable
Spherical or Cylindrical O.D.
See Features and Benefits for additional info on pages 286 - 287.

Bearing Dimensions

Size Code	Shaft Diameter	Cylindrical Part Number	Spherical Part Number	B O.D.	J Outer Ring Width	D	G	H	M	N	r	T	Approx. Weight
203	1/2	WB2B08EL▲	W2B08EL▲	1.5748	0.5118	1 1/8	0.2559	0.7500	1 1/8	0.879	0.024	17/32	0.30
	5/8	WB210EL▲	W210EL▲										
204	3/4	WB212EL▲	W212EL▲	1.8504	0.5906	1 7/32	0.2953	0.8437	1 5/16	1.013	0.039	17/32	0.50
205	7/8	WB214EL▲	W214EL▲	2.0472	0.5906	1 7/32	0.2953	0.8437	1 1/2	1.210	0.039	17/32	0.50
	15/16	WB215EL▲	W215EL▲										
	1	WB216EL▲	W216EL▲										
206	1 1/8	WB218EL▲	W218EL▲	2.4409	0.7087	1 13/32	0.3543	0.9375	1 3/4	1.587	0.039	5/8	0.75
	1 3/16	WB219EL▲	W219EL▲										
	1 1/4	WB2E20EL▲	W2E20EL▲										
207	1 1/4	WB220EL▲	W220EL▲	2.8346	0.7480	1 17/32	0.3740	1.0000	2 3/16	1.847	0.039	11/16	1.30
	1 3/8	WB222EL▲	W222EL▲										
	1 7/16	WB223EL▲	W223EL▲										
208	1 1/2	WB224EL▲	W224EL▲	3.1496	0.8661	1 23/32	0.4330	1.1875	2 3/8	2.083	0.039	23/32	1.60
209	1 5/8	WB226EL▲	W226EL▲	3.3465	0.8661	1 23/32	0.4330	1.1875	2 1/2	2.109	0.039	23/32	1.70
	1 11/16	WB227EL▲	W227EL▲										
	1 3/4	WB228EL▲	W228EL▲										
210	1 15/16	WB231EL▲	W231EL▲	3.5433	0.8661	1 23/32	0.4330	1.1875	2 3/4	2.306	0.039	23/32	1.75
	2	WB2E32EL▲	W2E32EL▲										

Additional Notes

Please call 1-866-REXNORD for availability
Dimension "r", max fillet radius of housing to clear bearing corner
Bearing O.D. tolerance for size code 208 and below,
+.0000 in/-.0005 in *(+0.000 mm/-0.013 mm)*: for all other size codes,
+.0000 in/-.0006 in *(+0.000 mm/-0.015 mm)*
▲ E lip seals standard

For the Selection Guide, Load Ratings and Speed Limits, see the Link-Belt 200 Series Ball Bearing Engineering section on pages 290 - 298.

Note: Dimensions subject to change. Certified dimensions of ordered material furnished on request.

WG200, WBG200

Photo Shows an Unmounted Ball Bearing Unit

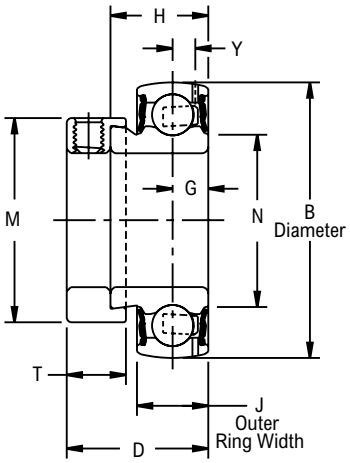

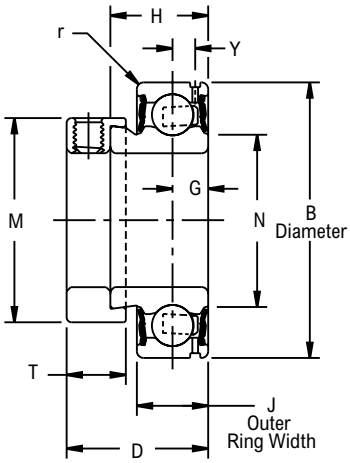

Product Features

Eccentric cam locking device
Sealed & relubricatable
Spherical or Cylindrical O.D.
See Features and Benefits for additional info on pages 286 - 287.

Bearing Dimensions

Size Code	Shaft Diameter	Cylindrical Part Number	Spherical Part Number	B O.D.	J Outer Ring Width	D	G	H	M	N	r	T	Y	Approx. Weight
203	1/2	WBG2B08EL▲	WG2B08EL▲	1.5748	0.5118	1 1/8	0.2559	0.7500	1 1/8	0.879	0.024	17/32	0.158	0.30
	5/8	WBG210EL▲	WG210EL▲											
204	3/4	WBG212EL▲	WG212EL▲	1.8504	0.5906	1 7/32	0.2953	0.8437	1 5/16	1.013	0.039	17/32	0.176	0.50
205	7/8	WBG214EL▲	WG214EL▲	2.0472	0.5906	1 7/32	0.2953	0.8437	1 1/2	1.210	0.039	17/32	0.176	0.50
	15/16	WBG215EL▲	WG215EL▲											
	1	WBG216EL▲	WG216EL▲											
206	1 1/8	WBG218EL▲	WG218EL▲	2.4409	0.7087	1 13/32	0.3543	0.9375	1 3/4	1.587	0.039	5/8	0.202	0.75
	1 3/16	WBG219EL▲	WG219EL▲											
	1 1/4	WBG2E20EL▲	WG2E20EL▲											
207	1 1/4	WBG220EL▲	WG220EL▲	2.8346	0.7480	1 17/32	0.3740	1.0000	2 3/16	1.847	0.039	11/16	0.239	1.30
	1 3/8	WBG222EL▲	WG222EL▲											
	1 7/16	WBG223EL▲	WG223EL▲											
208	1 1/2	WBG224EL▲	WG224EL▲	3.1496	0.8661	1 23/32	0.4330	1.1875	2 3/8	2.083	0.039	23/32	0.253	1.60
209	1 5/8	WBG226EL▲	WG226EL▲	3.3465	0.8661	1 23/32	0.4330	1.1875	2 1/2	2.109	0.039	23/32	0.254	1.70
	1 11/16	WBG227EL▲	WG227EL▲											
	1 3/4	WBG228EL▲	WG228EL▲											
210	1 15/16	WBG231EL▲	WG231EL▲	3.5433	0.8661	1 23/32	0.4330	1.1875	2 3/4	2.306	0.039	23/32	0.268	1.75
	2	WBG2E32EL▲	WG2E32EL▲											

Additional Notes

Please call 1-866-REXNORD for availability
Dimension "r", max fillet radius of housing to clear bearing corner
Bearing O.D. tolerance for size code 208 and below, +.0000 in/-.0005 in *(+0.000 mm/ -0.013 mm)*: for all other size codes, +.0000 in/-.0006 in *(+0.000 mm/-0.015 mm)*
▲ E lip seals standard

For the Selection Guide, Load Ratings and Speed Limits, see the Link-Belt 200 Series Ball Bearing Engineering section on pages 290 - 298.
Note: Dimensions subject to change. Certified dimensions of ordered material furnished on request.

SG200ELPA

Photo Shows an Unmounted Ball Bearing Unit

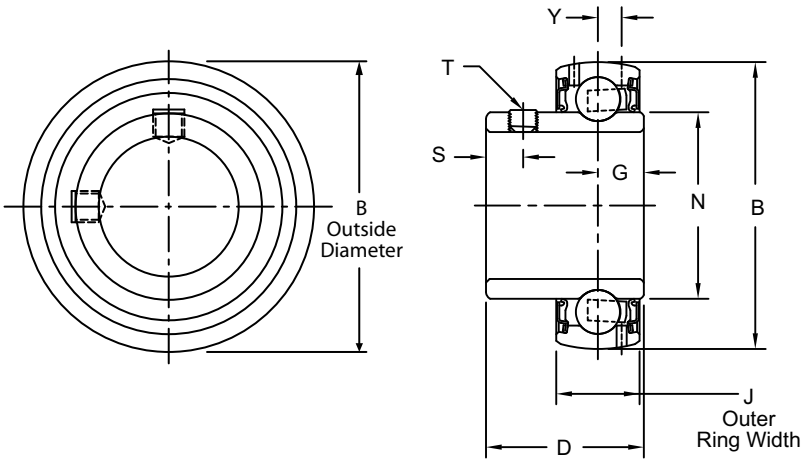

Product Features

Broad range of sealing options
Spring locking setscrew mount
Sealed & relubricatable
Spherical O.D.
See Features and Benefits for additional info on pages 286 - 287.

Bearing Dimensions

Size Code	Shaft Diameter	Part Number	B O.D.	J Outer Ring Width	D	G	N	S	T	Y	Approx. Weight
203	1/2	SG2B08ELPA♦● □Δ	1.5748	0.5118	63/64	0.3440	0.941	0.19	#10-32	0.158	0.25
	5/8	SG210ELPA♦● □Δ									0.21
	11/16	SG211ELPA♦● □Δ									0.19
204	3/4	SG212ELPA♦● □Δ	1.8504	0.5906	1 1/8	0.3760	1.121	0.23	1/4-28	0.176	0.32
	20.00	*SG2M20ELPA♦● □Δ*	*47.0000*	*15.0000*	*28.58*	*9.5500*	*28.470*	*5.80*	*M6X1*	*4.470*	*0.10*
205	7/8	SG214ELPA♦● □Δ	2.0472	0.5906	1 11/64	0.3760	1.313	0.25	1/4-28	0.176	0.43
	15/16	SG215ELPA♦● □Δ									0.40
	1	SG216ELPA♦● □Δ									0.37
	25.00	*SG2M25ELPA♦● □Δ*	*52.0000*	*15.0000*	*29.77*	*9.5500*	*33.350*	*6.40*	*M6X1*	*4.470*	*0.20*
206	1 1/8	SG218ELPA♦● □Δ	2.4409	0.7087	1 11/32	0.3920	1.587	0.31	5/16-24	0.202	0.63
	1 3/16	SG219ELPA♦● □Δ									0.60
	1 1/4	SG2E20ELPA♦● □Δ									0.57
	30.00	*SG2M30ELPA♦● □Δ*	*62.0000*	*18.0000*	*34.14*	*9.9600*	*40.310*	*7.90*	*M8X1.25*	*5.130*	*0.30*
207	1 1/4	SG220ELPA♦● □Δ	2.8346	0.7480	1 9/16	0.4540	1.847	0.34	5/16-24	0.227	1.02
	1 3/8	SG222ELPA♦● □Δ									0.92
	1 7/16	SG223ELPA♦● □Δ									0.86
	35.00	*SG2M35ELPA♦● □Δ*	*72.0000*	*19.0000*	*39.67*	*11.5300*	*46.910*	*8.60*	*M8X1.25*	*5.770*	*0.40*
208	1 1/2	SG224ELPA♦● □Δ	3.1496	0.8661	1 21/32	0.4850	2.083	0.34	5/16-24	0.263	1.27
	1 5/8	SG2E26ELPA♦● □Δ									1.20
	40.00	*SG2M40ELPA♦● □Δ*	*80.0000*	*22.0000*	*42.06*	*12.3200*	*52.910*	*8.60*	*M8X1.25*	*6.680*	*0.50*
209	1 5/8	SG226ELPA♦● □Δ	3.3465	0.8661	1 49/64	0.5320	2.281	0.36	5/16-24	0.256	1.50
	1 11/16	SG227ELPA♦● □Δ									1.43
	1 3/4	SG228ELPA♦● □Δ									1.36
210	1 7/8	SG230ELPA♦● □Δ	3.5433	0.8661	1 13/16	0.5320	2.475	0.38	3/8-24	0.256	1.57
	1 15/16	SG231ELPA♦● □Δ									1.48
	2	SG2E32ELPA♦● □Δ									1.39
211	2	SG232ELPA♦● □Δ	3.9370	0.9843	1 13/16	0.5370	2.749	0.38	3/8-24	0.298	2.27
	2 3/16	SG235ELPA♦● □Δ									1.97
	2 1/4	SG2E36ELPA♦● □Δ									1.87
212	2 1/4	SG236ELPA♦● □Δ	4.3307	1.0630	1 57/64	0.5780	3.012	0.38	3/8-24	0.330	2.85
	2 3/8	SG238ELPA♦● □Δ									2.61
	2 7/16	SG239ELPA♦● □Δ									2.49
215	2 15/16	SG247ELPA♦● □Δ	5.1181	1.1835	2 17/64	0.8040	3.632	0.37	3/8-24	0.266	3.96

Additional Notes

Please call 1-866-REXNORD for availability
Bearing O.D. tolerance for size code 203 thru 208, +.0000 in/-.0005 in *(+0.000 mm/-0.013 mm)*: for all other size codes, +.0000 in/-.0006 in *(+0.000 mm/-0.015 mm)*
Lip seals standard
♦ Available with E1 viton seals for all size codes
Available with free running style seals, add suffix ● FF, □ HFF or Δ MHFF for all size codes

For the Selection Guide, Load Ratings and Speed Limits, see the Link-Belt 200 Series Ball Bearing Engineering section on pages 290 - 298.
Note: Dimensions subject to change. Certified dimensions of ordered material furnished on request.

ER-KCL

Photo Shows an ER Adapter Series Ball Bearing Unit

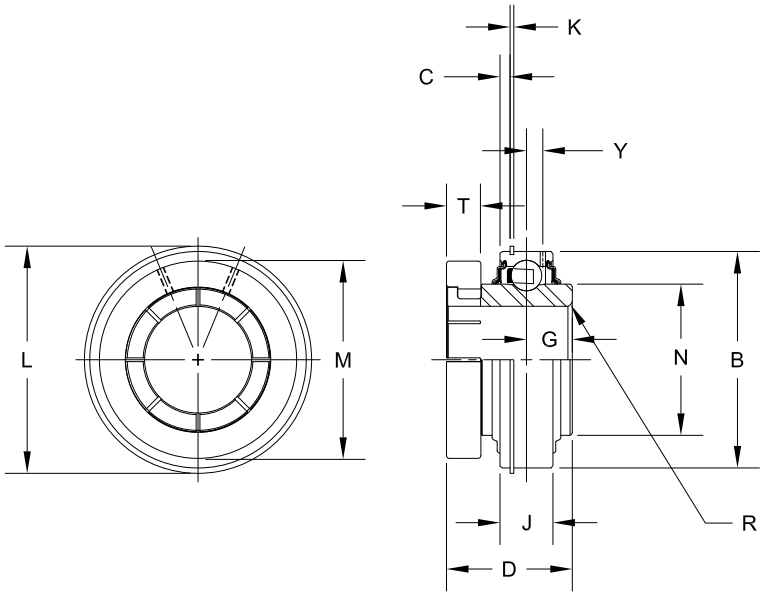

Product Features

Broad range of sealing options
Centrik-Lok shaft locking device
Sealed & relubricatable
Cylindrical O.D.
O.D. mounted snap ring
See Features and Benefits for additional info on pages 286 - 287.

Bearing Dimensions

Size Code	Shaft Diameter	Part Number	B O.D.	J Outer Ring Width	L Snap Ring O.D.	C	D	G	K	M	N	R	T Width	T Tap	Y	Approx. Weight
204	1/2	ER8KCL♦● □Δ	1.8504	0.6240	2 1/16	3/32	1 15/64	0.4050	3/64	1 1/2	1.154	0.04	23/64	#10-32	0.142	0.62
	5/8	ER10KCL♦● □Δ														0.55
	3/4	ER12KCL♦● □Δ														0.54
	20.00	*ER204KCL♦♦ ♦Δ*	*47.0000*	*15.8500*	*52.40*	*2.40*	*30.96*	*10.2900*	*1.20*	*38.10*	*29.310*	*1.00*	*8.70*	*M6X1*	*3.610*	*0.20*
205	7/8	ER14KCL♦● □Δ	2.0472	0.7490	2 17/64	3/32	1 13/32	0.5080	3/64	1 5/8	1.313	0.04	23/64	1/4-28	0.185	0.65
	15/16	ER15KCL♦● □Δ														0.63
	1	ER16KCL♦● □Δ														0.61
	25.00	*ER205KCL♦♦ ♦Δ*	*52.0000*	*19.0250*	*57.60*	*2.40*	*34.92*	*12.9000*	*1.20*	*41.40*	*33.350*	*1.00*	*8.70*	*M6X1*	*4.700*	*0.30*
206	1 1/8	ER18KCL♦● □Δ	2.4409	0.8740	2 21/32	3/32	1 17/32	0.6250	3/64	2	1.587	0.04	7/16	1/4-28	0.224	0.96
	1 3/16	ER19KCL♦● □Δ														0.94
	1 1/4	ER20SKCL♦● □Δ														0.90
207	1 1/4	ER20KCL♦● □Δ	2.8346	0.9365	3 5/64	1/8	1 47/64	0.6880	1/16	2 1/4	1.847	0.04	7/16	5/16-24	0.256	1.75
	1 3/8	ER22KCL♦● □Δ														1.70
	1 7/16	ER23KCL♦● □Δ														1.62
208	1 1/2	ER24KCL♦● □Δ	3.1496	1.0927	3 25/64	1/8	1 31/32	0.7500	1/16	2 9/16	2.083	0.06	7/16	5/16-24	0.297	2.18
	40.00	*ER208KCL♦♦ ♦Δ*	*80.0000*	*27.7550*	*86.10*	*3.20*	*49.22*	*19.0500*	*1.60*	*65.00*	*52.910*	*1.60*	*11.10*	*M8X1.25*	*7.540*	*1.00*
209	1 5/8	ER26KCL♦● □Δ	3.3465	1.0927	3 19/32	1/8	1 31/32	0.7500	1/16	2 3/4	2.281	0.06	7/16	5/16-24	0.297	2.28
	1 11/16	ER27KCL♦● □Δ														2.22
	1 3/4	ER28KCL♦● □Δ														2.15
210	1 7/8	ER30KCL♦● □Δ	3.5433	1.1240	3 25/32	1/8	2 5/64	0.7500	3/32	3	2.475	0.06	9/16	5/16-24	0.265	2.75
	1 15/16	ER31KCL♦● □Δ														2.61
211	2	ER32KCL♦● □Δ	3.9370	1.1860	4 11/64	1/8	2 15/64	0.8750	3/32	3 1/4	2.749	0.08	9/16	5/16-24	0.298	3.38
	2 3/16	ER35KCL♦● □Δ														3.07
212	2 1/4	ER36KCL♦● □Δ	4.3307	1.2490	4 9/16	1/8	2 19/32	1.0000	3/32	3 1/2	3.012	0.08	9/16	3/8-24	0.330	4.48
	2 3/8	ER38KCL♦● □Δ														4.38
	2 7/16	ER39KCL♦● □Δ														4.19
214	2 1/2	ER40KCL♦● □Δ	4.9213	1.3740	5 9/32	5/32	2 47/64	1.0620	7/64	3 15/16	3.433	0.08	3/4	3/8-24	0.374	5.92
	2 11/16	ER43KCL♦● □Δ														5.49
215	2 7/8	ER46KCL♦● □Δ	5.1181	1.4990	5 1/2	5/32	3	1.3130	7/64	4 3/8	3.632	0.08	3/4	3/8-24	0.374	6.60
	2 15/16	ER47KCL♦● □Δ														6.37
216	3	ER48KCL♦● □Δ	5.5118	1.6865	5 7/8	5/32	3 3/8	1.3130	7/64	5	3.920	0.12	3/4	3/8-24	0.406	8.05
	3 3/16	ER51KCL♦● □Δ														7.56

Additional Notes

Please call 1-866-REXNORD for availability

Bearing O.D. tolerance for size code 204, +.0000 in/-.0005 in *(+0.000 mm/-0.013 mm)*: for size code 205 thru 208, +.0000 in/-.0006 in *(+0.000 mm/-0.015 mm)*: for size code 209 thru 212, +.0000 in/-.0008 in *(+0.000 mm/-0.020 mm)*: for all other size codes, +.0000 in/-.0010 in *(+0.000 mm/-0.025 mm)*

Lip seals standard

♦ Available with E1 viton seals for all size codes

Available with free running style seals, add suffix ● FF, □ HFF or Δ MHFF for all size codes

For the Selection Guide, Load Ratings and Speed Limits, see the Link-Belt 200 Series Ball Bearing Engineering section on pages 290 - 298.

Note: Dimensions subject to change. Certified dimensions of ordered material furnished on request.

ER-K

Interchange: *GER, ER-T*

Photo Shows an ER Adapter Series Ball Bearing Unit

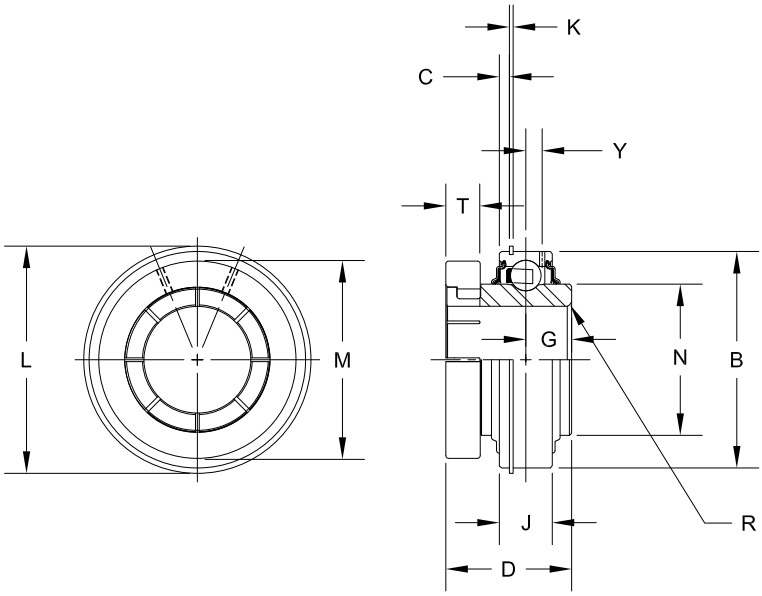

Product Features

Broad range of sealing options
Spring locking setscrew mount
Sealed & relubricatable
Spherical O.D.
See Features and Benefits for additional info on pages 286 - 287.

Bearing Dimensions

Size Code	Shaft Diameter	Part Number	B O.D.	J Outer Ring Width	L Snap Ring O.D.	C	D	G	K	M	N	R	T Width	T Tap	Y	Approx. Weight
204	1/2	ER8K♦● □Δ	1.8504	0.6240	2 1/16	3/32	1 15/64	0.4050	3/64	1 1/2	1.154	0.04	23/64	#10-32	0.142	0.62
	5/8	ER10K♦● □Δ														0.55
	3/4	ER12K♦● □Δ														0.54
	20.00	*ER204K♦♦ ♦Δ*	*47.0000*	*15.8500*	*52.40*	*2.40*	*30.96*	*10.2900*	*1.20*	*38.10*	*29.310*	*1.00*	*8.70*	*M6X1*	*3.610*	*0.20*
205	7/8	ER14K♦● □Δ	2.0472	0.7490	2 17/64	3/32	1 13/32	0.5080	3/64	1 5/8	1.313	0.04	23/64	1/4-28	0.185	0.65
	15/16	ER15K♦● □Δ														0.63
	1	ER16K♦● □Δ														0.61
	25.00	*ER205K♦♦ ♦Δ*	*52.0000*	*19.0250*	*57.60*	*2.40*	*34.92*	*12.9000*	*1.20*	*41.40*	*33.350*	*1.00*	*8.70*	*M6X1*	*4.700*	*0.30*
206	1 1/8	ER18K♦● □Δ	2.4409	0.8740	2 21/32	3/32	1 17/32	0.6250	3/64	2	1.587	0.04	7/16	1/4-28	0.224	0.96
	1 3/16	ER19K♦● □Δ														0.94
	1 1/4	ER20SK♦● □Δ														0.90
207	1 1/4	ER20K♦● □Δ	2.8346	0.9365	3 5/64	1/8	1 47/64	0.6880	1/16	2 1/4	1.847	0.04	7/16	5/16-24	0.256	1.75
	1 3/8	ER22K♦● □Δ														1.70
	1 7/16	ER23K♦● □Δ														1.62
208	1 1/2	ER24K♦● □Δ	3.1496	1.0927	3 25/64	1/8	1 31/32	0.7500	1/16	2 9/16	2.083	0.06	7/16	5/16-24	0.297	2.18
	40.00	*ER208K♦♦ ♦Δ*	*80.0000*	*27.7550*	*86.10*	*3.20*	*49.22*	*19.0500*	*1.60*	*65.00*	*52.910*	*1.60*	*11.10*	*M8X1.25*	*7.540*	*1.00*
209	1 5/8	ER26K♦● □Δ	3.3465	1.0927	3 19/32	1/8	1 31/32	0.7500	1/16	2 3/4	2.281	0.06	7/16	5/16-24	0.297	2.28
	1 11/16	ER27K♦● □Δ														2.22
	1 3/4	ER28K♦● □Δ														2.15
210	1 7/8	ER30K♦● □Δ	3.5433	1.1240	3 25/32	1/8	2 5/64	0.7500	3/32	3	2.475	0.06	9/16	5/16-24	0.265	2.75
	1 15/16	ER31K♦● □Δ														2.61
211	2	ER32K♦● □Δ	3.9370	1.1860	4 11/64	1/8	2 15/64	0.8750	3/32	3 1/4	2.749	0.08	9/16	5/16-24	0.298	3.38
	2 3/16	ER35K♦● □Δ														3.07
212	2 1/4	ER36K♦● □Δ	4.3307	1.2490	4 9/16	1/8	2 19/32	1.0000	3/32	3 1/2	3.012	0.08	9/16	3/8-24	0.330	4.48
	2 3/8	ER38K♦● □Δ														4.38
	2 7/16	ER39K♦● □Δ														4.19
214	2 1/2	ER40K♦● □Δ	4.9213	1.3740	5 9/32	5/32	2 47/64	1.0620	7/64	3 15/16	3.433	0.08	3/4	3/8-24	0.374	5.92
	2 11/16	ER43K♦● □Δ														5.49
215	2 7/8	ER46K♦● □Δ	5.1181	1.4990	5 1/2	5/32	3	1.3130	7/64	4 3/8	3.632	0.08	3/4	3/8-24	0.374	6.60
	2 15/16	ER47K♦● □Δ														6.37
216	3	ER48K♦● □Δ	5.5118	1.6865	5 7/8	5/32	3 3/8	1.3130	7/64	5	3.920	0.12	3/4	3/8-24	0.406	8.05
	3 3/16	ER51K♦● □Δ														7.56

Additional Notes

Please call 1-866-REXNORD for availability

Bearing O.D. tolerance for size code 204, +.0000 in/-.0005 in *(+0.000 mm/-0.013 mm)*: for size code 205 thru 208, +.0000 in/-.0006 in *(+0.000 mm/-0.015 mm)*: for size code 209 thru 212, +.0000 in/-.0008 in *(+0.000 mm/-0.020 mm)*: for all other size codes, +.0000 in/-.0010 in *(+0.000 mm/-0.025 mm)*

Lip seals standard

♦ Available with E1 viton seals for all size codes

Available with free running style seals, add suffix ● FF, □ HFF or Δ MHFF for all size codes

For the Selection Guide, Load Ratings and Speed Limits, see the Link-Belt 200 Series Ball Bearing Engineering section on pages 290 - 298.

Note: Dimensions subject to change. Certified dimensions of ordered material furnished on request.

ER

Interchange: *SER, ER*

Photo Shows an ER Adapter Series Ball Bearing Unit

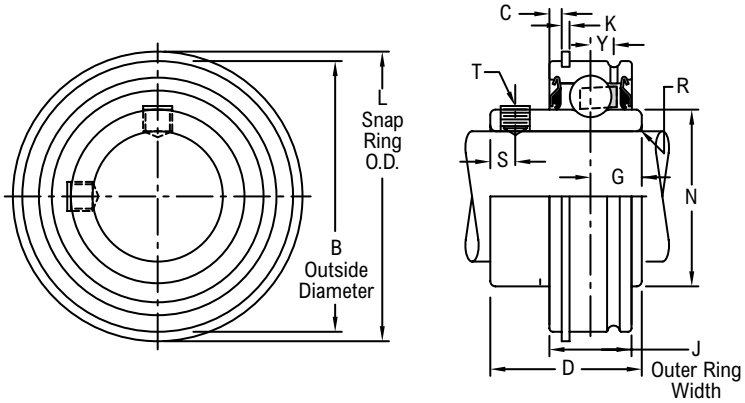

Product Features

Broad range of sealing options
Spring locking setscrew mount
Sealed & relubricatable
Cylindrical O.D.
O.D. mounted snap ring
See Features and Benefits for additional info on pages 286 - 287.

Bearing Dimensions

Size Code	Shaft Diameter	Part Number	B O.D.	J Outer Ring Width	L Snap Ring O.D.	C	D	G	K	N	R	S	T Tap Size	Y	Approx. Weight
204	1/2	ER8♦● □Δ	1.8504	0.6240	2 1/16	3/32	1 7/32	0.4050	3/64	1.154	0.04	15/64	#10-32	0.142	0.62
	5/8	ER10♦● □Δ													0.55
	3/4	ER12♦● □Δ											1/4-28		0.54
205	7/8	ER14♦● □Δ	2.0472	0.7490	2 17/64	3/32	1 3/8	0.5080	3/64	1.313	0.04	15/64	1/4-28	0.185	0.65
	15/16	ER15♦● □Δ													0.63
	1	ER16♦● □Δ													0.61
	25.00	*ER205♦♦ ♦Δ*	*52.0000*	*19.0250*	*57.60*	*2.40*	*34.92*	*12.9000*	*1.20*	*33.350*	*1.00*	*2.00*	*M6X1*	*4.700*	*0.30*
206	1 1/8	ER18♦● □Δ	2.4409	0.8740	2 21/32	3/32	1 1/2	0.6250	3/64	1.587	0.04	1/4	1/4-28	0.224	0.96
	1 3/16	ER19♦● □Δ													0.94
	1 1/4	ER20S♦● □Δ													0.90
	30.00	*ER206♦♦ ♦Δ*	*62.0000*	*22.2000*	*67.50*	*2.40*	*38.10*	*15.8800*	*1.20*	*40.310*	*1.00*	*6.40*	*M6X1*	*5.690*	*0.40*
207	1 1/4	ER20♦● □Δ	2.8346	0.9365	3 5/64	1/8	1 11/16	0.6880	1/16	1.847	0.04	21/64	5/16-24	0.256	1.75
	1 3/8	ER22♦● □Δ													1.70
	1 7/16	ER23♦● □Δ													1.62
208	1 1/2	ER24♦● □Δ	3.1496	1.0927	3 25/64	1/8	1 15/16	0.7500	1/16	2.083	0.06	3/8	5/16-24	0.297	2.18
	40.00	*ER208♦♦ ♦Δ*	*80.0000*	*27.7550*	*86.10*	*3.20*	*49.22*	*19.0500*	*1.60*	*52.910*	*1.60*	*9.50*	*M8X1.25*	*7.540*	*1.00*
209	1 5/8	ER26♦● □Δ	3.3465	1.0927	3 19/32	1/8	1 15/16	0.7500	1/16	2.281	0.06	3/8	5/16-24	0.297	2.28
	1 11/16	ER27♦● □Δ													2.22
	1 3/4	ER28♦● □Δ													2.15
210	1 7/8	ER30♦● □Δ	3.5433	1.1240	3 25/32	1/8	2 1/32	0.7500	3/32	2.475	0.06	3/8	3/8-24	0.265	2.75
	1 15/16	ER31♦● □Δ													2.61
211	2	ER32♦● □Δ	3.9370	1.1860	4 11/64	1/8	2 3/16	0.8750	3/32	2.749	0.08	3/8	3/8-24	0.298	3.38
	2 3/16	ER35♦● □Δ													3.07
212	2 1/4	ER36♦● □Δ	4.3307	1.2490	4 9/16	1/8	2 9/16	1.0000	3/32	3.012	0.08	3/8	3/8-24	0.330	4.48
	2 3/8	ER38♦● □Δ													4.38
	2 7/16	ER39♦● □Δ													4.19
214	2 1/2	ER40♦● □Δ	4.9213	1.3740	5 9/32	5/32	2 3/4	1.0620	7/64	3.433	0.08	3/8	3/8-24	0.374	5.92
	2 11/16	ER43♦● □Δ													5.49
215	2 7/8	ER46♦● □Δ	5.1181	1.4990	5 1/2	5/32	3 1/16	1.3130	7/64	3.632	0.08	3/8	3/8-24	0.374	6.60
	2 15/16	ER47♦● □Δ													6.37
216	3	ER48♦● □Δ	5.5118	1.6865	5 7/8	5/32	3 1/4	1.3130	7/64	3.920	0.12	3/8	3/8-24	0.406	8.05
	3 3/16	ER51♦● □Δ													7.56

Additional Notes

Please call 1-866-REXNORD for availability

Bearing O.D. tolerance for size code 204, +.0000 in/-.0005 in *(+0.000 mm/-0.013 mm)*: for size code 205 thru 208, +.0000 in/-.0006 in *(+0.000 mm/-0.015 mm)*: for size code 209 thru 212, +.0000 in/-.0008 in *(+0.000 mm/-0.020 mm)*: for all other size codes, +.0000 in/-.0010 in *(+0.000 mm/-0.025 mm)*

Lip seals standard

♦ Available with E1 viton seals

Available with free running style seals, add suffix ● FF, □ SFF or Δ MKFF

For the Selection Guide, Load Ratings and Speed Limits, see the Link-Belt 200 Series Ball Bearing Engineering section on pages 290 - 298.

Note: Dimensions subject to change. Certified dimensions of ordered material furnished on request.

MSL

Photo Shows an Unmounted Ball Bearing Unit with Cylindrical Outside Diameter

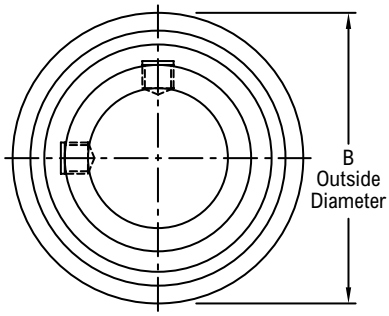

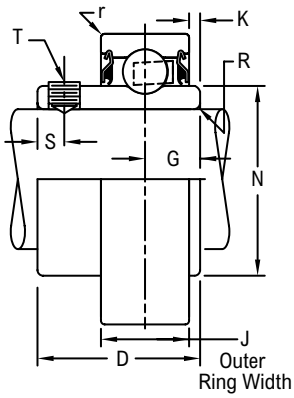

Product Features

- Broad range of sealing options
- Wide inner ring for increased shaft stability
- Spring locking setscrew mount
- Sealed & non-relubricatable
- Cylindrical O.D.
- See Features and Benefits for additional info on pages 286 - 287.

Bearing Dimensions

Size Code	Shaft Diameter	Part Number	B O.D.	J Outer Ring Width	D	G	K	N	R	r	S	T	Approx. Weight
203	1/2	MSL8♦● □Δ	1.5748	0.5118	31/32	0.3910	7/64	0.941	0.024	0.024	3/16	#10-32	0.24
	5/8	MSL10♦● □Δ											
204	3/4	MSL12♦● □Δ	1.8504	0.5906	1 5/32	0.4380	9/64	1.121	0.039	0.039	3/16	#10-32	0.35
205	1	MSL16♦● □Δ	2.0472	0.5906	1 7/32	0.4520	9/64	1.313	0.039	0.039	7/32	1/4-28	0.39
207	1 1/4	MSL20♦● □Δ	2.8346	0.7480	1 17/32	0.5930	7/32	1.847	0.039	0.039	1/4	1/4-28	1.00
	1 3/8	MSL22♦● □Δ											
	1 7/16	MSL23♦● □Δ											

Additional Notes

Please call 1-866-REXNORD for availability

Bearing bore tolerance, +.0005 in/-.0000 in *(+0.013 mm/-0.000 mm)*

Bearing O.D. tolerance for size code 203 thru 204, +.0000 in/-.0005 in *(+0.000 mm/-0.013 mm)*: for all other size codes, +.0000 in/-.0006 in *(+0.000 mm/-0.015 mm)*

Lip seals standard

♦ Available with E1 viton seals

Available with free running style seals, add suffix ● FF, □ HFF or Δ MHFF

For the Selection Guide, Load Ratings and Speed Limits, see the Link-Belt 200 Series Ball Bearing Engineering section on pages 290 - 298.

Note: Dimensions subject to change. Certified dimensions of ordered material furnished on request.

MSLN

Photo Shows an Unmounted Ball Bearing Unit with Cylindrical Outside Diameter

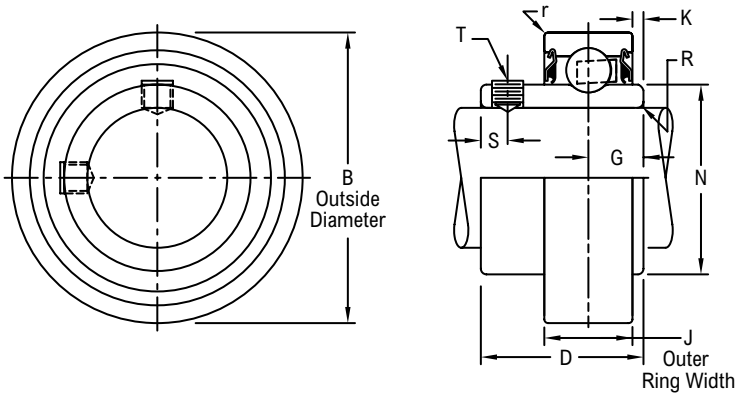

Product Features

- Broad range of sealing options
- Spring locking setscrew mount
- Sealed & non-relubricatable
- Cylindrical O.D.
- See Features and Benefits for additional info on pages 286 - 287.

Bearing Dimensions

Size Code	Shaft Diameter	Part Number	B O.D.	J Outer Ring Width	D	G	K	N	R	r	S	T	Approx. Weight
203	1/2	MSLN8♦● □Δ	1.5748	0.5118	51/64	0.2770	0	0.941	0.024	0.024	3/16	#10-32	0.22
	5/8	MSLN10♦● □Δ											
204	3/4	MSLN12♦● □Δ	1.8504	0.5906	15/16	0.2940	0	1.121	0.039	0.039	3/16	#10-32	0.32
205	1	MSLN16♦● □Δ	2.0472	0.5906	15/16	0.3090	0	1.313	0.039	0.039	7/32	1/4-28	0.34

Additional Notes

Please call 1-866-REXNORD for availability

Bearing bore tolerance, +.0005 in/-.0000 in *(+0.013 mm/-0.000 mm)*

Bearing O.D. tolerance for size code 203 thru 204, +.0000 in/-.0005 in *(+0.000 mm/-0.013 mm)*: for all other size codes, +.0000 in/-.0006 in *(+0.000 mm/-0.015 mm)*

Lip seals standard

♦ Available with E1 viton seals

Available with free running style seals, add suffix ● FF, □ HFF or Δ MHFF

For the Selection Guide, Load Ratings and Speed Limits, see the Link-Belt 200 Series Ball Bearing Engineering section on pages 290 - 298.

Note: Dimensions subject to change. Certified dimensions of ordered material furnished on request.

Hex

Photo Shows an Unmounted Hex Bore Ball Bearing Unit

Product Features

Spherical or Cylindrical O.D.
Sealed & non-relubricatable
See Features and Benefits for additional info on pages 286 - 287.

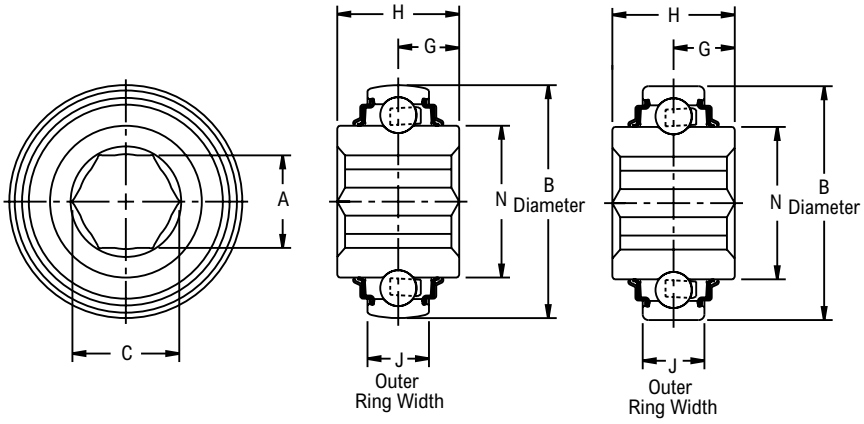

Bearing Dimensions

Size Code	Shaft Diameter	Part Number	Industry Number	B O.D.	J Outer Ring Width	A	C	G	H	N	Approx. Weight
Cylindrical											
204	5/8	10KB204N*	204KRR4	1.8504	0.5512	0.626	0.728	0.412	0.8250	1.121	0.30
	11/16	11KB204N*	204KRR2			0.695	0.797				
205	7/8	14KB205N*Δ	205KRR2	2.0472	0.5906	0.876	1.010	0.500	1.0000	1.313	0.40
206	1	16KB206N*	206KRR6	2.4409	0.6299	1.001	1.153	0.472	0.9449	1.587	0.60
207	1 1/8	18KB207N*Δ	207KRR9	2.8346	0.6693	1.126	1.299	0.742	1.4844	1.847	1.10
209	1 1/2	24KB209N*Δ	209KRR2	3.3465	0.7480	1.501	1.732	0.591	1.1811	2.281	1.40
210	1 5/8	26KB3210E3 Δ	W210PP7	3.5433	1.1875	1.626	1.876	0.594	1.1875	2.475	1.60
Spherical											
204	11/16	11K204N*	204KRRB2	1.8504	0.5906	0.695	0.797	0.412	0.8250	1.121	0.30
205	7/8	14K205N*Δ	205KRRB2	2.0472	0.5906	0.876	1.010	0.500	1.0000	1.313	0.40
206	1	16K206N*	206KRRB6	2.4409	0.7087	1.001	1.153	0.472	0.9449	1.587	0.60
207	1 1/8	18K207N*Δ	207KRRB9	2.8346	0.7480	1.126	1.299	0.742	1.4844	1.847	1.10
208	1 1/4	20K5208E3 Δ	W208PPB16	3.1496	0.7087	1.251	1.450	0.718	1.4375	2.083	1.20
209	1 1/2	24K209N*Δ	209KRRB2	3.3465	0.8661	1.501	1.732	0.591	1.1811	2.281	1.40
210	1 5/8	26K3210E3 Δ	W210PPB7	3.5433	1.1875	1.626	1.876	0.594	1.1875	2.475	1.60

Additional Notes

Please call 1-866-REXNORD for availability
Δ E3 triple lip seals are standard for size codes 208 & 210
On size codes 205, 207 & 209, Δ available with E3 triple lip seals
For the Selection Guide, Load Ratings and Speed Limits, see the Link-Belt 200 Series Ball Bearing Engineering section on pages 290 - 298.

Note: Dimensions subject to change. Certified dimensions of ordered material furnished on request.

Round

Photo Shows an Unmounted Round Bore Ball Bearing Unit

Product Features

Spherical or Cylindrical O.D.
Triple lip seals
Optional relubrication feature
See Features and Benefits for additional info on pages 286 - 287.

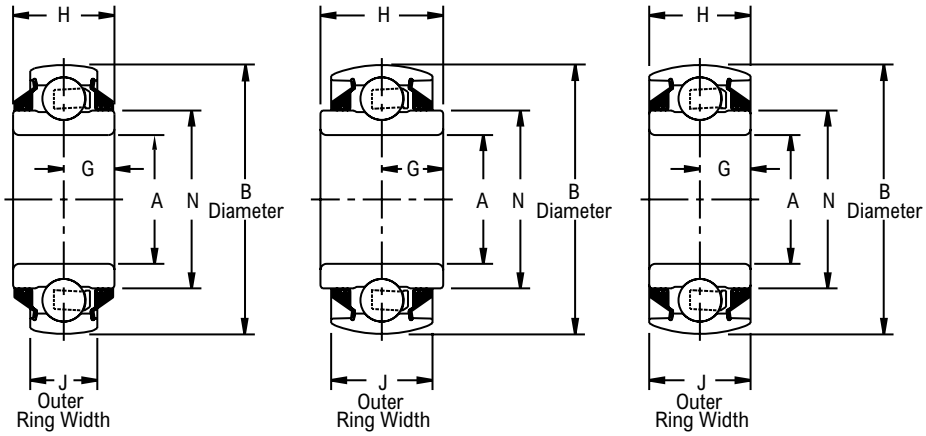

Style 1 Style 2 Style 3

*Note: Drawing represents spherical O.D. bearing

Bearing Dimensions

Size Code	Shaft Diameter	Part Number	Industry Number	Style	B O.D.	J Outer Ring Width	A	G	H	N	Y	Approx. Weight
Non-relubricatable												
Cylindrical												
208	1 3/16	19RB208E3 Δ	W208PP7	1	3.1496	0.7087	1.1880	0.594	1.1875	2.083	-	1.30
		19RB3208E3 Δ	W208PP4	3		1.1875						
	1 1/2	24RB6208E3 Δ	W208PP2	2			1.5005	0.844	1.6875			1.50
		24RB8208E3 Δ	W208PP10	1		0.8268						
210	1 15/16	31RB3210E3 Δ	W210PP2	3	3.5433	1.1875	1.9380	0.594	1.1875	2.475	-	1.50
211	2 3/16	35RB3211E3 Δ	W211PP2	3	3.9370	1.3125	2.1880	0.656	1.3125	2.749	-	2.25
Spherical												
208	7/8	14R4208E3 Δ	W208PPB14	2	3.4380	1.1875	0.8900	0.719	1.4375	2.083	-	1.30
	1 3/16	19R208E3 Δ	W208PPB7	1	3.1496	0.7087	1.1880	0.594	1.1875			
		19R3208E3 Δ	W208PPB4	3		1.1875						
	1 1/2	24R6208E3 Δ	W208PPB2	2			1.5005	0.844	1.6875			1.50
209	1 1/2	24R3209E3 Δ	W209PPB4	3	3.3465	1.1875	1.5350	0.594	1.1875	2.281	-	1.50
		24R4209E3 Δ	W209PPB6	2	3.4380			0.719	1.4375			
	45.00	*R3209E3 Δ*	*W209PPB2*	*3*	*85.0000*	*30.1620*	*45.0000*	*15.080*	*30.1620*	*57.940*		*0.60*
210	1 3/4	28R3210E3 Δ	W210PPB5	3	3.5433	1.1875	1.7850	0.594	1.1875	2.475	-	1.60
	1 15/16	31R3210E3 Δ	W210PPB2				1.9380					1.50
211	2 3/16	35R3211E3 Δ	W211PPB2	3	3.9370	1.3125	2.1880	0.656	1.3125	2.749	-	2.25

Continued...

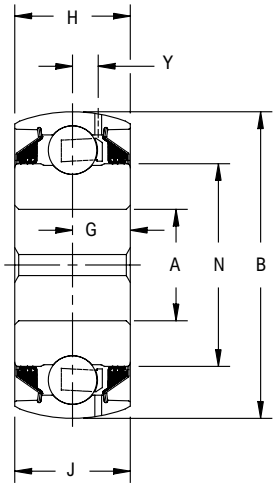

*Note: Drawing represents spherical O.D. bearing

Continued...

Bearing Dimensions

Size Code	Shaft Diameter	Part Number	Industry Number	Style	B O.D.	J Outer Ring Width	A	G	H	N	Y	Approx. Weight
Relubricatable												
Cylindrical												
210	1 3/8	22RBG3210E3 Δ	GW210PP3	3	3.5433	1.1875	1.4065	0.594	1.1875	2.475	0.255	1.40
	1 15/16	31RBG3210E3 Δ	GW210PP2				1.9380					1.50
211	1 5/8	26RBG3211E3 Δ	GW211PP4	3	3.9370	1.3125	1.6600	0.656	1.3125	2.749	0.267	1.60
	2 3/16	35RBG3211E3 Δ	GW211PP2				2.1880					2.25
Spherical												
209	1 1/2	24RG3209E3 Δ	GW209PPB4	3	3.3465	1.1875	1.5350	0.594	1.1875	2.281	0.248	1.50
	45.00	*RG3209E3 Δ*	*GW209PPB2*		*85.0000*	*30.1620*	*45.0000*	*15.080*	*30.1620*	*57.940*	*6.300*	*0.60*
210	1 3/8	22RG3210E3 Δ	GW210PPB3	3	3.5433	1.1875	1.4065	0.594	1.1875	2.475	0.255	1.40
	1 3/4	28RG3210E3 Δ	GW210PPB5				1.7850					1.60
	1 15/16	31RG3210E3 Δ	GW210PPB2				1.9380					1.50
211	1 5/8	26RG3211E3 Δ	GW211PPB4	3	3.9370	1.3125	1.6600	0.656	1.3125	2.749	0.267	1.60
	2 3/16	35RG3211E3 Δ	GW211PPB2				2.1880					2.25

Additional Notes

Please call 1-866-REXNORD for availability

Unground spherical O.D. tolerance, +/- .005 in *(+/- 0.13 mm)*.
Center portion of O.D. is cylindrical

Δ E3 triple lip seals standard

For the Selection Guide, Load Ratings and Speed Limits, see the Link-Belt 200 Series Ball Bearing Engineering section on pages 290 - 298.

Note: Dimensions subject to change. Certified dimensions of ordered material furnished on request.

Square

Photo Shows an Unmounted Square Bore Ball Bearing Unit

Product Features

Spherical or Cylindrical O.D.
Triple lip seals
Optional relubrication feature
See Features and Benefits for additional info on pages 286 - 287.

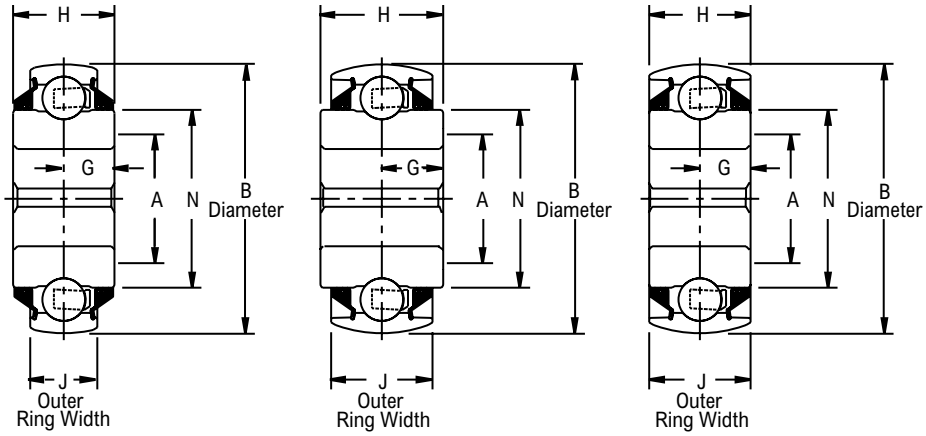

Style 1 Style 2 Style 3

*Note: Drawing represents spherical O.D. bearing

Bearing Dimensions

Size Code	Shaft Diameter	Part Number	Industry Number	Style	B O.D.	J Outer Ring Width	A	G	H	N	Y	Approx. Weight
Non-relubricatable												
Cylindrical												
208	7/8	14SB5208E3 Δ	W208PP13	1	3.1496	0.7087	0.9050	0.719	1.4375	2.083	-	1.50
	1	16SB2208E3 Δ	W208PP9	2		1.1875	1.0300					1.70
		16SB5208E3 Δ	W208PP6	1		0.7087						
	1 1/8	18SB22E08E3 Δ	W208PP8	2		1.1875	1.1850					1.50
		18SB52E08E3 Δ	W208PP5	1		0.7087						
211	1 1/2	24SB3211E3 Δ	W211PP3	3	3.9370	1.3125	1.5300	0.656	1.3125	2.749	-	2.40
Spherical												
208	7/8	14S4208E3 Δ	W208PPB11	2	3.4380	1.1875	0.9050	0.719	1.4375	2.083	-	1.50
	1	16S2208E3 Δ	W208PPB9		3.1496		1.0300					1.70
		16S5208E3 Δ	W208PPB6	1		0.7087						
	1 1/8	18S22E08E3 Δ	W208PPB8	2		1.1875	1.1850					1.50
		18S42E08E3 Δ	W208PPB12		3.4380							
		18S52E08E3 Δ	W208PPB5	1	3.1496	0.7087						
209	1 1/4	20S2209E3 Δ	W209PPB5	2	3.3465	1.1875	1.2800	0.719	1.4375	2.281	-	1.85
		20S4209E3 Δ	W209PPB7		3.4380							
211	1 1/2	24S3211E3 Δ	W211PPB3	3	3.9370	1.3125	1.5300	0.656	1.3125	2.749	-	2.40

Continued...

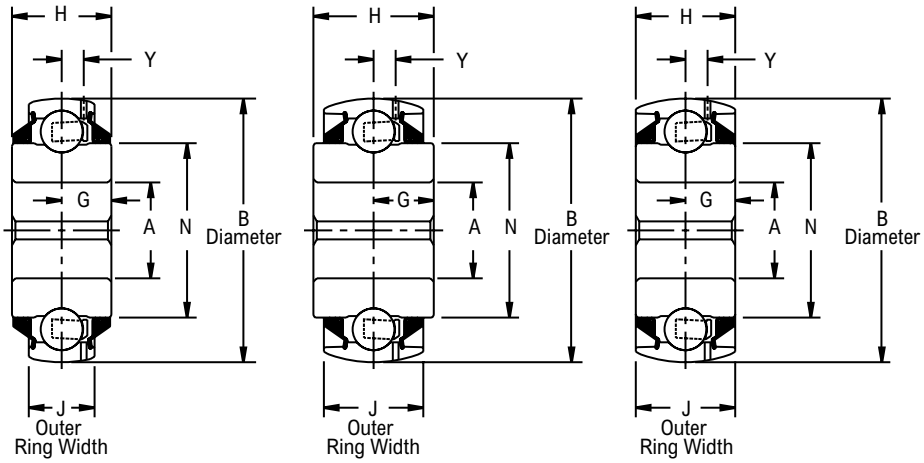

Style 1 Style 2 Style 3

*Note: Drawing represents spherical O.D. bearing

Continued...

Bearing Dimensions

Size Code	Shaft Diameter	Part Number	Industry Number	Style	B O.D.	J Outer Ring Width	A	G	H	N	Y	Approx. Weight
Relubricatable												
Cylindrical												
209	1 1/4	20SBG5209E3 Δ	GW209PP8	1	3.3465	0.8661	1.2800	0.719	1.4375	2.281	0.254	1.85
211	1 1/2	24SBG3211E3 Δ	GW211PP3	3	3.9370	1.3125	1.5300	0.656	1.3125	2.749	0.267	2.40
Spherical												
208	1	16SG5208E3 Δ	GW208PPB6	1	3.1496	0.8661	1.0300	0.719	1.4375	2.083	0.253	1.70
	1 1/8	18SG22E08E3 Δ	GW208PPB8	2		1.1875	1.1850					1.50
		18SG52E08E3 Δ	GW208PPB5	1		0.8661						
209	1 1/4	20SG5209E3 Δ	GW209PPB8	1	3.3465	0.8661	1.2800	0.719	1.4375	2.281	0.254	1.85
211	1 1/2	24SG3211E3 Δ	GW211PPB3	3	3.9370	1.3125	1.5300	0.656	1.3125	2.749	0.267	2.40

Additional Notes

Please call 1-866-REXNORD for availability
Unground spherical O.D. tolerance, +/- .005 in *(+/- 0.13 mm)*.
Center portion of O.D. is cylindrical
Δ E3 triple lip seals standard
For the Selection Guide, Load Ratings and Speed Limits, see the Link-Belt 200 Series Ball Bearing Engineering section on pages 290 - 298.

Note: Dimensions subject to change. Certified dimensions of ordered material furnished on request.

Ball Bearings
Medium Duty (200 Series) Units: Link-Belt

Contents

	Page
Features and Benefits	400
Nomenclature	402
Engineering	404
Dimensions	
Pillow Blocks	409
Flange Blocks	411
Take-up Blocks	417
Hanger Units	419
Unmounted Replacement Bearings	421

Industries Served

Aggregates
Agriculture
Air Handling
Package Handling
Construction
Shipping
Mining
Forest Products

Medium Duty Ball Bearings Designed for Long Life and Precision Performance

200 Series Medium Duty Ball Bearings provide design and performance features developed by decades of experience in supplying precision ball bearing inserts for other major mounted bearing manufacturers and complete mounted units to machinery and equipment manufacturers. They are priced competitively to bearings of comparable construction and design. In addition to sound basic design and construction, special features minimize the three most common causes of premature bearing failure… loosening of bearings on rotating shafts, entrance of contaminants or loss of lubricant due to seal failure and insufficient housing strength. Medium duty foot-mounted pillow blocks, flange units, take-up blocks and hanger bearings cataloged in the following pages are available from stock. For other sizes, mountings or special requirements to fit your applications, please consult the Rexnord Bearing Products.

Spring Locking

Precision alignable ball bearing of deep groove construction for high capacity and high precision applications. Spring locking collars of setscrew locking security, locks bearing to the shaft.

Centrik-Lok CL Shaft Locking Device

The Centrik-Lok method of fastening the bearing inner race to the shaft provides substantial improvement in holding power compared to spring locking collars. The unique 2-piece collar and 8-tab design offers the best shaft holding force in the industry.

Combination Seal-Flinger System

Optimum protection from loss of lubricant and entrance of dirt and contaminants is achieved with positive lip-type contact seals. The resulting longer seal life extends bearing life significantly.

Rugged, One-Piece Cast Iron Housing

Housings are designed to withstand bearing load ratings, external vibration and shock. Foot mounted pillow block bolt holes are elongated for easy installation and adjustment.

Spherically-Seated Bearing Insert with Anti-Rotation Device

The spherical fit between the outer race O.D. and I.D. of the block is precisely controlled for easy shaft alignment. The anti-rotation device is permanently installed in the bearing insert O.D. It engages one of the housing insertion slots, preventing outer race creep and wear of housing. There is no danger of losing a separable pin during field replacement of bearings and no danger of preloading the bearing as is possible in other designs where a lube fitting is tightened against a locking pin.

Precision Mounted Ball Bearings with Shaft Locking Device

Centrik-Lok precision mounted ball bearings feature a concentric shaft locking device, resulting in a great improvement in the holding power (locking efficiency). Field experience shows substantial improvement in holding power when compared to eccentric locking collars and even greater improvement in locking efficiency when compared to 120° setscrew positioning and other types of locking arrangements.

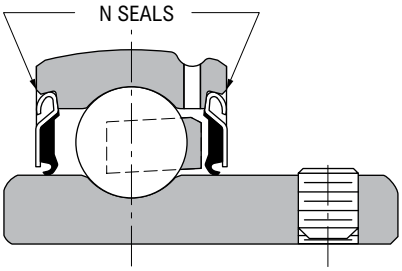

STANDARD MEDIUM DUTY SEAL

Standard sealing arrangements

Standard steel clad Type N single lip seals have a useful temperature range of –40°F to +225°F and can withstand temperatures of 250°F for intermittent service. Special sealing arrangements are available for higher temperatures and "free-running" or special contamination resistance.

Special optional sealing arrangements

Suffix-MHFF indicates flingers both sides. This provides a sealed, "free-running" bearing with heat shield protection. It is satisfactory for temperatures from –40°F to +225°F. Rexnord Bearing Products must be consulted regarding availability of any of these optional sealing configurations.

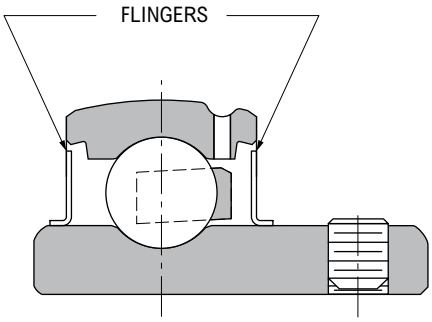

–MHFF

Examples for ordering:

1. Mounted Unit MPS219MHFF
2. Bearing Insert MSG219MHFFLPA

High temperature ball bearing inserts and housed units

Mounted ball bearings and inserts are available for high temperature applications up to 400°F. The "E1" package provides the following features.

1. Extra Internal Diameters Clearance (DC), based on a 200°F temperature differential between inner and outer races, compensates for the inner race expanding at a faster rate than the outer race and will avoid preloading of the bearings.
2. Steel Retainer (Cage) – 2 piece riveted construction.
3. High Temperature Lubrication – prelubricated with a No.2 consistency bentone-base grease with petroleum oil. When operated near upper limit, (400°F to 450°F) daily relubrication is required.
4. Viton Seals withstand temperatures to 400°F.

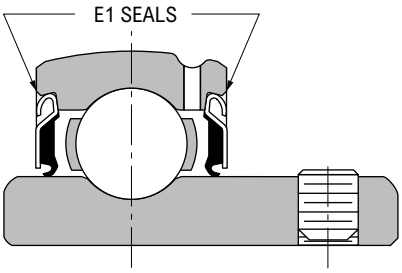

–E1

Examples for ordering:

1. Mounted Unit MPS219E1
2. Bearing Insert MSG219E1LPA

Free running applications and applications above 400°F

Sealing options such as –FF (flingers only) for "free running" applications and/or temperatures over 400°F where contamination is not severe. The flinger acts as a labyrinth seal. High temperature bearings require a greater amount of diametral clearance (DC) and a higher temperature lubricant. Consult Rexnord Bearing Products for recommendations.

Examples for ordering:

1. Mounted Unit MPS219FF
2. Bearing Insert MSG219FFLPA

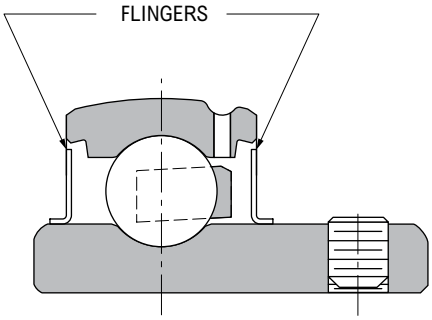

–FF

200 Series Medium Duty Ball Bearing Nomenclature

M P CL 2 19 N K 75

Symbol	Description
M	Medium Duty
F	Flanged 4-bolt
FC	Flanged cartridge unit, 4-bolt round
FX	Flanged unit, 2-bolt
P	Pillow block, standard backing
PL	Pillow block, low backing
TH	Take-up, wide slot
CHB	Hanger screw conveyor unit
EHB	Hanger unit
CL	Narrow inner ring, Centrik-Lok collar
S	Narrow inner ring, Spring Locking
2	200 Series ball bearing designation
19	Shaft size in sixteenths of an inch
M30	Shaft size, metric series in millimeters
J	Steel retainers
E1	Viton seals, Increased Clearance, Steel Retainer, High Temp. Lube
E	Molded single lip seals
FF	Flingers only, 50% grease fill
HFF	Flingers only, 10% oil fill
MHFF	Flingers only, 10% grease fill
N	Single lip seals - standard
K75	Nickel plated housing
K4	100% grease filled
K5	No grease - Preservative only
K6	100% grease filled and housing plugged
18A	SHC100 grease
18W	SHC460 grease
18Y	SHC220 grease
4C	Molykote 44 grease
99A	Food grade grease
2, 3, 4, 5	Clearances other than standard

200 Series Medium Duty Ball Bearing Insert Nomenclature

M S G 2 20 N L PA

Symbol	Description
M	Medium Duty
CL	Narrow inner ring, Centrik-Lok collar
S	Narrow inner ring, Spring Locking
None	Non-relubricatable bearing
G	Relubricatable bearing
2	200 Series ball bearing designation
20	Shaft size in sixteenths of an inch
M30	Shaft size, metric series in millimeters
E1	Viton seals, Increased Clearance, Steel Retainer, High Temp. Lube
E	Molded single lip seals
FF	Flingers only, 50% grease fill
HFF	Flingers only, 10% oil fill
MHFF	Flingers only, 10% grease fill
N	Single lip seals - standard
L1	Bearing without collar
L	Bearing with collar & setscrews
PA	Suffix designation for unmounted replacement bearing insert

200 Series Medium Duty Ball Bearings Selection Guide

To select a bearing, determine the applied radial load, the applied thrust load, the desired Rating Life, and applicable operating conditions. The procedure shown here will aid in selecting a bearing to meet an L_{10} design life. The formulas for calculating life expectancy should be used to determine the Rating Life L_{10} for the bearing selected.

The selection procedures and rating formulas shown here are in agreement with The American Bearing Manufacturers Association Standards and ANSI/ABMA Standards STD 9-1990. Ratings are based on fatigue life. The Rating Life or fatigue life at 90% reliability is the usual basis for bearing selection.

Medium duty bearings have extended inner rings on one side only for compactness and low cost. These series are applicable to light or moderate duty requirements.

Where non-relubricatable bearings are used, bearing life is often limited by grease life, which is in turn affected by operating conditions. Also, economically designed housings must be applied within proportionate load limits. To assure a satisfactory bearing application, fitting practice, mounting, lubrication, sealing, static rating, housing strength, operating conditions and maintenance must be considered.

Steps for Selection

Step 1

Determine an appropriate L_{10} design life.

Type of service	Operating time, hours per year	Design life, years	L_{10} design life, hours
Light seasonal usage	500 to 750	3-5	3,000
Heavy seasonal usage	1,400 to 1,600	4-6	8,000
Industrial—8 hour shift	2,000	10	20,000

Step 2

Determine a required $\left(\frac{C}{P}\right)$ from Table 1.

Step 3

Calculate the required C and select a ball bearing.

a For radial load only:

$P = F_r$

required $C = \left(\frac{C}{P}\right) P$ using $\left(\frac{C}{P}\right)$ from Step 2

Select a ball bearing from Table 3 with a basic load rating C equal to or greater than the required C.

b For combined radial and thrust loads when $\frac{F_a}{F_r}$ is 0.19 or less:

$P = F_r$

required $C = \left(\frac{C}{P}\right) P$ using $\left(\frac{C}{P}\right)$ from Step 2

Select a ball bearing from Table 3 with a basic load rating C equal to or greater than the required C.

Step 3 (continued)

c For combined radial and thrust loads when $\frac{F_a}{F_r}$ is greater than 0.19, use the following trial method:

Maximum $P = .56F_r + 2.30F_a$

Maximum required $C = \left(\frac{C}{P}\right) P$ using $\left(\frac{C}{P}\right)$ from Step 2

Select a trial ball bearing with a basic load rating C from Table 3 approximately equal to the maximum required C.

With this trial bearing calculate: $\frac{F_a}{Nd^2}$

Determine X and Y from Table 2.

Calculate P for the trial bearing.

$P = XF_r + YF_a$

required $C = \left(\frac{C}{P}\right) P$ for the trial bearing using $\left(\frac{C}{P}\right)$ from Step 2

Consult Table 3, basic load rating. If a smaller bearing meets or nearly meets the required C, its life expectancy can be calculated.

Note: If the load P is greater than .15C for series 25 and 35 consult Rexnord Bearing Products.

Selection

Symbols for formulas:

C = basic load rating, pounds (or newtons)
C_o = static load rating, pounds (or newtons)
e = a reference value
F_a = thrust load, pounds (or newtons)
F_r = radial load, pounds (or newtons)
L_{10} = rating life, hours
n = speed, revolutions per minute
P = equivalent radial load, pounds (or newtons)
X = radial factor
Y = thrust factor

Table 1 • Relation of L_{10} life and speed to $\left(\frac{C}{P}\right)$

Bearing life, hours L_{10}	$\left(\frac{C}{P}\right)$ ratio								
	Speed, n								
	50	100	200	300	400	500	600	700	800
3000	2.08	2.62	3.30	3.77	4.15	4.47	4.75	5.01	5.23
4000	2.29	2.88	3.63	4.15	4.57	4.92	5.23	5.51	5.76
5000	2.46	3.10	3.91	4.47	4.92	5.30	5.64	5.93	6.20
6000	2.62	3.30	4.15	4.75	5.23	5.64	5.99	6.30	6.59
8000	2.88	3.63	4.57	5.23	5.76	6.20	6.59	6.94	7.25
10000	3.10	3.91	4.92	5.64	6.20	6.68	7.10	7.47	7.81
12000	3.30	4.15	5.23	5.99	6.59	7.10	7.54	7.94	8.30
14000	3.47	4.37	5.51	6.30	6.94	7.47	7.94	8.36	8.74
16000	3.63	4.57	5.76	6.59	7.25	7.81	8.30	8.74	9.14
18000	3.77	4.75	5.99	6.86	7.54	8.13	8.63	9.09	9.50
20000	3.91	4.92	6.20	7.10	7.81	8.42	8.94	9.41	9.84
25000	4.21	5.30	6.68	7.65	8.42	9.07	9.63	10.10	10.60
30000	4.47	5.64	7.10	8.13	8.94	9.63	10.20	10.80	11.30
35000	4.71	5.93	7.47	8.55	9.41	10.10	10.80	11.30	11.90
40000	4.92	6.20	7.81	8.94	9.84	10.60	11.30	11.90	12.40
45000	5.12	6.45	8.13	9.30	10.2 0	11.00	11.70	12.30	12.90
50000	5.30	6.68	8.42	9.63	10.60	11.40	12.10	12.80	13.40
60000	5.64	7.10	8.94	10.20	11.30	12.10	12.90	13.60	14.20
70000	5.93	7.47	9.41	10.80	11.90	12.80	13.6 0	14.30	14.90
80000	6.20	7.81	9.84	11.30	12.40	13.40	14.20	14.90	15.60
90000	6.45	8.13	10.20	11.70	12.90	13.90	14.80	15.50	16.20
100000	6.68	8.42	10.60	12.10	13.40	14.40	15.30	16.10	16.80
150000	7.65	9.63	12.10	13.90	15.30	16.50	17.50	18.40	19.30
200000	8.42	10.60	13.40	15.30	16.80	18.10	19.30	20.30	21.20
	Speed, n								
	900	1000	1200	1500	1800	2400	3600	6000	10000
3000	5.44	5.64	5.99	6.45	6.86	7.54	8.63	10.20	12.10
4000	5.99	6.20	6.59	7.10	7.54	8.30	9.50	11.30	13.40
5000	6.45	6.68	7.10	7.65	8.13	8.94	10.20	12.10	14.40
6000	6.86	7.10	7.54	8.13	8.63	9.50	10.90	12.90	15.30
8000	7.54	7.81	8.30	8.94	9.50	10.50	12.00	14.20	16.80
10000	8.13	8.42	8.94	9.63	10.20	11.30	12.90	15.30	18.10
12000	8.63	8.94	9.50	10.20	10.90	12.00	13.70	16.20	19.30
14000	9.09	9.41	10.0	10.80	11.40	12.60	14.40	17.10	20.30
16000	9.50	9.84	10.5	11.30	12.00	13.20	15.10	17.90	21.20
18000	9.88	10.20	10.90	11.70	12.40	13.70	15.70	18.60	22.00
20000	10.20	10.60	11.30	12.10	12.90	14.20	16.20	19.30	22.80
25000	11.00	11.40	12.10	13.10	13.90	15.30	17.50	20.70	24.60
30000	11.70	12.10	12.90	13.90	14.80	16.20	18.60	22.00	26.10
35000	12.30	12.80	13.60	14.60	15.50	17.10	19.60	23.20	27.50
40000	12.90	13.40	14.20	15.30	16.20	17.90	20.50	24.30	28.70
45000	13.40	13.90	14.80	15.90	16.90	18.60	21.30	25.20	29.90
50000	13.90	14.40	15.30	16.50	17.50	19.30	22.00	26.10	31.00
60000	14.80	15.30	16.20	17.50	18.60	20.50	23.40	27.80	32.90
70000	15.50	16.10	17.10	18.40	19.60	21.50	24.60	29.20	34.60
80000	16.20	16.80	17.90	19.30	20.50	22.50	25.80	30.50	36.20
90000	16.90	17.50	18.60	20.00	21.30	23.40	26.80	31.80	37.70
100000	17.50	18.10	19.30	20.70	22.00	24.30	27.80	32.90	39.00
150000	20.00	20.70	22.00	23.70	25.20	27.80	31.80	37.70	44.60
200000	22.00	22.80	24.30	26.10	27.80	30.50	35.00	41.40	49.10

Basic formula

$$\left(\frac{C}{P}\right) = \left(\frac{L_{10} \times n \times 60}{1{,}000{,}000}\right)^{1/3}$$

$$L_{10} = \frac{\left(\frac{C}{P}\right)^3 \times 1{,}000{,}000}{n \times 60}$$

Life Expectancy

To calculate the Rating Life L_{10} of any selected or trial bearing:

Step 1

Determine the equivalent radial load P.

a For radial load only:
$P = F_r$

b For combined radial and thrust load:
$P = XF_r + YF_a$ using X and Y from Table 2 below.

Step 2

Calculate the ratio of basic load rating C to the equivalent radial load.

$$\left(\frac{C}{P}\right)$$

Step 3

Approximate the bearing life from Table 1.

Table 2 • X and Y factors for ball bearings

$\frac{F_a}{Nd^2}$	e	$\frac{F_a}{F_r} \le e$		$\frac{F_a}{F_r} > e$	
		X	Y	X	Y
25	.19	1.0	0	.56	2.30
37.5	.21	1.0	0	.56	2.15
50	.22	1.0	0	.56	1.99
75	.24	1.0	0	.56	1.85
100	.26	1.0	0	.56	1.71
125	.27	1.0	0	.56	1.63
150	.28	1.0	0	.56	1.56
200	.30	1.0	0	.56	1.45
300	.34	1.0	0	.56	1.31
500	.38	1.0	0	.56	1.15
750	.42	1.0	0	.56	1.04
1000	.44	1.0	0	.56	1.00

For values between those in the table linear interpolation can be used.

Life Adjustment

The Rating Life, *L_{10}*, may be modified for some applications in accordance with the formula

$$L'_n = a_1 a_2 a_3 L_{10}$$

where L'_n = Adjusted life for (100-n) % reliability,

a_1 = Life adjustment factor for reliability

a_2 = Life adjustment factor for material and processing

a_3 = Life adjustment factor for operating conditions.

For most normal applications, all factors will be taken as 1, and the Rating Life used as the selection basis or life estimate. In addition, as long as standard catalog bearings are used, a_2 will be normally set equal to one. The factor a_3 covers such things as lubrication, misalignment, and temperature. Some conditions that could yield a_3 significantly different than unity include speeds less than 20000 DN or greater than 200000 DN, temperatures below –40°F *(–40°C)* or above 275°F *(135°C)*. For other possible conditions, as well as additional information on life adjustment factors, consult Rexnord Bearing Products.

Table 3 - Load Ratings

Size Code	C Basic load rating		Co Static load rating		Approximate speed limit RPM*			d Ball Diameter	N Number of balls	Nd^2
	Pounds	Newtons	Pounds	Newtons	N Seals	E Seals‡	Flingers	inches		
206	4390	*19500*	2530	*1130*	8000	5600	9800	3/8	9	1.27
207	5810	*25800*	3440	*15300*	6850	4800	8400	7/16	9	1.72
208	7330	*32600*	4460	*19900*	6000	4500	7500	1/2	9	2.25
209	7370	*32800*	4590	*20400*	5330	4000	6800	1/2	9	2.25
210	7920	*35200*	5220	*23200*	4800	3600	6400	1/2	10	2.50
211	9800	*43600*	6570	*29200*	4360	3200	5800	9/16	10	3.16
212	11840	*52700*	8080	*36000*	4000	3000	5300	5/8	10	3.91
214	14040	*62450*	8620	*38300*	3050	2850	4600	11/16	10	4.73
215	15080	*67000*	11100	*49200*	3300	2700	4400	11/16	11	5.20
216	17420	*77500*	11400	*50700*	2700	2550	4050	3/4	11	6.19
218	21580	*95990*	14400	*64000*	2400	2250	3600	7/8	10	7.66

If the load P is greater than 15% of the C rating for S200 and 25% of the C rating for CL200, consult Rexnord Bearing Division.

For S200 Series reduce C Basic Load Rating by 23%.

For CL200 Series reduce C Basic Load Rating by 15%.

* Based on grease lubrication and moderate load.

‡ E seals operation at higher speeds up to N seal speed limit is allowable providing the lip seal friction does not result in operating temperatures over 225°F *(107°C).*

Table 4 - Load Ratings

Size Code	L10 Minimum life, hours	Radial Load Ratings, Pounds																	
		Speed, RPM																	
		50	100	200	300	400	500	600	700	800	900	1000	1200	1500	1800	2000	2500	3000	3500
206	8000	1523	1209	960	838	762	707	665	632	605	581	561	528	490	461	445	413	389	370
	20000	1122	891	707	618	561	521	490	466	445	428	413	389	361	340	328	305	287	272
	40000	891	707	561	490	445	413	389	370	354	340	328	309	287	270	260	242	228	216
	100000	656	521	413	361	328	305	287	272	260	250	242	228	211	199	192	178	168	159
207	8000	2015	1599	1269	1109	1007	935	880	836	799	769	742	698	648	610	589	547	515	489
	20000	1484	1178	935	817	742	689	648	616	589	566	547	515	478	450	434	403	379	360
	40000	1178	935	742	648	589	547	515	489	468	450	434	408	379	357	344	320	301	286
	100000	868	689	547	478	434	403	379	360	344	331	320	301	279	263	254	236	222	211
208	8000	2542	2017	1601	1399	1271	1180	1110	1055	1009	970	936	881	818	770	743	690	649	617
	20000	1873	1486	1180	1031	936	869	818	777	743	715	690	649	603	567	548	508	478	454
	40000	1486	1180	936	818	743	690	649	617	590	567	548	515	478	450	435	403	380	361
	100000	1095	869	690	603	548	508	478	454	435	418	403	380	352	332	320	297	280	266
209	8000	2555	2028	1610	1406	1278	1186	1116	1060	1014	975	941	886	822	774	747	694	653	620
	20000	1883	1494	1186	1036	941	874	822	781	747	718	694	653	606	570	551	511	481	457
	40000	1494	1186	941	822	747	694	653	620	593	570	551	518	481	453	437	406	382	363
	100000	1101	874	694	606	551	511	481	457	437	420	406	382	354	333	322	299	281	267
210	8000	2745	2178	1729	1510	1372	1274	1199	1139	1089	1047	1011	952	883	831	803	745	701	666
	20000	2022	1605	1274	1113	1011	939	883	839	803	772	745	701	651	612	591	549	517	491
	40000	1605	1274	1011	883	803	745	701	666	637	612	591	556	517	486	469	436	410	389
	100000	1183	939	745	651	591	549	517	491	469	451	436	410	381	358	346	321	302	287
211	8000	3398	2697	2141	1870	1699	1577	1484	1410	1349	1297	1252	1178	1094	1029	994	922	868	825
	20000	2504	1987	1577	1378	1252	1162	1094	1039	994	955	922	868	806	758	732	680	640	608
	40000	1987	1577	1252	1094	994	922	868	825	789	758	732	689	640	602	581	539	508	482
	100000	1464	1162	922	806	732	680	640	608	581	559	539	508	471	443	428	397	374	355
212	8000	4106	3259	2586	2259	2053	1906	1793	1704	1629	1567	1513	1423	1321	1243	1201	1114	1049	996
	20000	3025	2401	1906	1665	1513	1404	1321	1255	1201	1154	1114	1049	974	916	885	821	773	734
	40000	2401	1906	1513	1321	1201	1114	1049	996	953	916	885	832	773	727	702	652	613	583
	100000	1769	1404	1114	974	885	821	773	734	702	675	652	613	569	536	517	480	452	429
214	8000	4867	3863	3066	2679	2434	2259	2126	2020	1932	1857	1793	1687	1566	1474	1423	1321	1243	1181
	20000	3586	2846	2259	1974	1793	1665	1566	1488	1423	1368	1321	1243	1154	1086	1049	973	916	870
	40000	2846	2259	1793	1566	1423	1321	1243	1181	1130	1086	1049	987	916	862	832	773	727	691
	100000	2097	1665	1321	1154	1049	973	916	870	832	800	773	727	675	635	613	569	536	509
215	8000	5228	4149	3293	2877	2614	2427	2284	2169	2075	1995	1926	1812	1683	1583	1529	1419	1335	
	20000	3852	3057	2427	2120	1926	1788	1683	1598	1529	1470	1419	1335	1240	1167	1126	1046	984	
	40000	3057	2427	1926	1683	1529	1419	1335	1269	1213	1167	1126	1060	984	926	894	830	781	
	100000	2253	1788	1419	1240	1126	1046	984	935	894	860	830	781	725	682	659	611	575	
216	8000	6039	4793	3804	3323	3020	2803	2638	2506	2397	2304	2225	2094	1944	1829	1766	1639		
	20000	4450	3532	2803	2449	2225	2065	1944	1846	1766	1698	1639	1543	1432	1348	1301	1208		
	40000	3532	2803	2225	1944	1766	1639	1543	1465	1402	1348	1301	1224	1137	1070	1033	959		
	100000	2602	2065	1639	1432	1301	1208	1137	1080	1033	993	959	902	837	788	761	706		
218	8000	7481	5938	4713	4117	3741	3473	3268	3104	2969	2855	2756	2594	2408	2266	2188			
	20000	5512	4375	3473	3034	2756	2559	2408	2287	2188	2103	2031	1911	1774	1669	1612			
	40000	4375	3473	2756	2408	2188	2031	1911	1815	1736	1669	1612	1517	1408	1325	1279			
	100000	3224	2559	2031	1774	1612	1496	1408	1338	1279	1230	1188	1118	1037	976	943			

If the load P is greater than 15% of the C rating for S200 and 25% of the C rating for CL200, consult Rexnord Bearing Division.

For S200 Series reduce C Basic Load Rating by 23%.

For CL200 Series reduce C Basic Load Rating by 15%.

Operation in the high speed shaded areas requires frequent lubrication.

MPCL200N

Interchange: *P2BDLM, MP-T*

Photo Shows a 2-Bolt Ball Bearing Pillow Block Unit

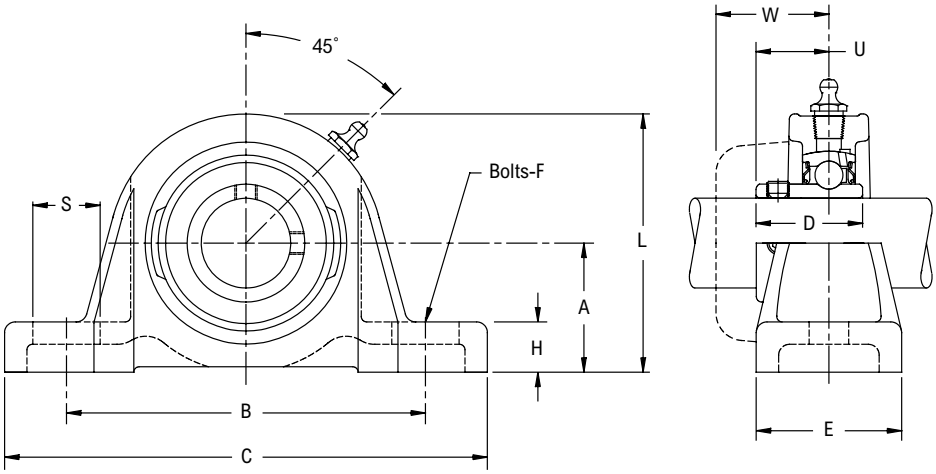

Product Features

- Corrosion-resistant powder coating
- Cast iron housing
- Broad range of sealing options
- Centrik-Lok shaft locking device
- Alignable & relubricatable
- See Features and Benefits for additional info on pages 400 - 401.

Bearing Dimensions

Size Code	Shaft Diameter	Part Number	A Base to Centerline Height	B Distance Between Bolt Holes	C	D	E	F Bolts	H	L	M Collar O.D.	S	U	Approx. Weight
206	1	MPCL216N♦●□Δ	1 11/16	4 5/8	6 5/16	1 5/16	1 5/8	1/2	11/16	3 5/16	2 19/32	15/16	29/32	2.54
207	1 3/16	MPCL219N♦●□Δ	1 7/8	4 15/16	6 3/8	1 31/64	1 3/4	1/2	13/16	3 11/16	3 1/16	7/8	1 1/32	3.58
208	1 7/16	MPCL223N♦●□Δ	2 1/8	5 3/8	7 1/16	1 25/32	1 7/8	1/2	15/16	4 1/8	3 3/16	15/16	1 7/32	4.65
209	1 1/2	MPCL224N♦●□Δ	2 1/8	5 11/16	7 1/4	1 25/32	2	1/2	13/16	4 5/16	3 3/8	1	1 7/32	5.40
210	1 11/16	MPCL227N♦●□Δ	2 1/4	6 3/16	7 7/8	1 51/64	2 1/8	5/8	7/8	4 9/16	3 3/4	15/16	1 5/16	6.53
	1 3/4	MPCL228N♦●□Δ												
211	1 15/16	MPCL231N♦●□Δ	2 1/2	6 29/32	8 7/8	1 57/64	2 5/16	5/8	1	5	4 3/32	1 7/32	1 11/32	7.87
	2	MPCL232N♦●□Δ												
212	2 3/16	MPCL235N♦●□Δ	2 3/4	7 1/2	9 1/2	2 5/32	2 3/8	5/8	1 3/16	5 7/16	4 9/32	1 1/8	1 19/32	10.24
214	2 7/16	MPCL239N●□Δ♦	3	8 1/4	10 3/4	2 5/16	2 11/16	3/4	1 5/32	6	4 13/16	1 1/2	1 21/32	13.31
	2 1/2	MPCL240N●□Δ♦												
215	2 11/16	MPCL243N●□Δ♦	3 1/2	9 1/8	12	2 23/64	2 7/8	7/8	1 7/32	6 21/32	5 1/4	1 7/8	1 11/16	17.36
216	2 15/16	MPCL247N●□Δ♦	3 1/2	9 1/4	12	2 25/32	3	7/8	1 9/32	6 7/8	5 47/64	1 3/4	2 5/64	19.32
	3	MPCL248N●□Δ♦												
218	3 3/16	MPCL251N●□Δ♦	4	10 7/8	14	2 19/32	3 3/8	7/8	1 11/32	7 7/8	5 47/64	1 15/16	1 25/32	27.52
	3 7/16	MPCL255N●□Δ♦												
	3 1/2	MPCL256N●□Δ♦												

Additional Notes

- Please call 1-866-REXNORD for availability
- Lubrication fitting tap size, 1/8 in PT
- Base to centerline tolerance, +/- .005 in *(+/- 0.13 mm)*
- Lip seals standard
- ♦ Available with E1 viton seals
- Available with free running style seals, add suffix ● FF, □ HFF or Δ MHFF
- Nickel plated housings available through all size codes, add suffix K75

For the Selection Guide, Load Ratings and Speed Limits, see the Link Belt 200 Series Medium Duty Ball Bearings Engineering section on pages 404 - 407.

Note: Dimensions subject to change. Certified dimensions of ordered material furnished on request.

MPS200N

Interchange: *P2BSCM, SYM-TF, UCPX, MP, YASM*

Photo Shows a 2-Bolt Ball Bearing Pillow Block Unit

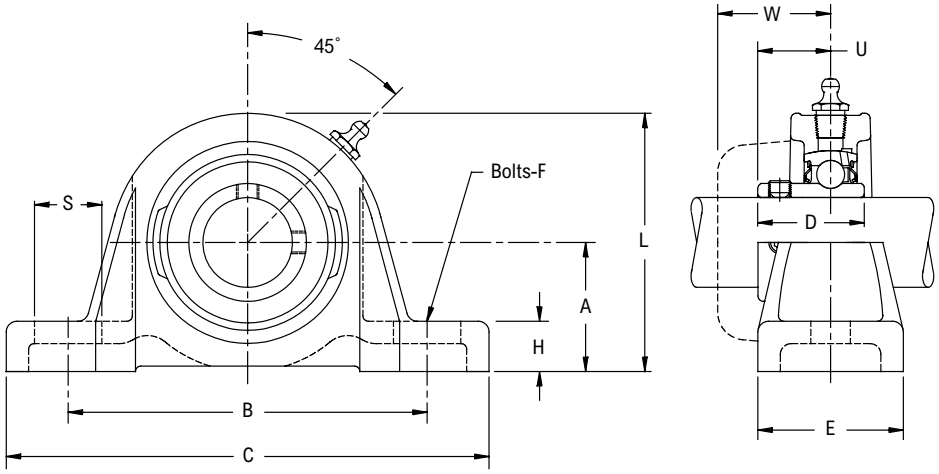

Product Features

- Corrosion-resistant powder coating
- Cast iron housing
- Broad range of sealing options
- Spring locking setscrew mount
- Alignable & relubricatable
- See Features and Benefits for additional info on pages 400 - 401.

Bearing Dimensions

Size Code	Shaft Diameter	Part Number	A Base to Centerline Height	B Distance Between Bolt Holes	C	D	E	F Bolts	H	L	S	U	Approx. Weight
206	1	MPS216N♦●□Δ	1 11/16	4 5/8	6 5/16	1 11/32	1 5/8	1/2	11/16	3 5/16	15/16	61/64	2.54
207	1 3/16	MPS219N♦●□Δ	1 7/8	4 15/16	6 3/8	1 9/16	1 3/4	1/2	13/16	3 11/16	7/8	1 7/64	3.58
208	1 7/16	MPS223N♦●□Δ	2 1/8	5 3/8	7 1/16	1 21/32	1 7/8	1/2	15/16	4 1/8	15/16	1 11/64	4.65
209	1 1/2	MPS224N♦●□Δ	2 1/8	5 11/16	7 1/4	1 49/64	2	1/2	13/16	4 5/16	1	1 15/64	5.40
210	1 11/16	MPS227N♦●□Δ	2 1/4	6 3/16	7 7/8	1 13/16	2 1/8	5/8	7/8	4 9/16	15/16	1 17/64	6.53
	1 3/4	MPS228N♦●□Δ											
211	1 15/16	MPS231N♦●□Δ	2 1/2	6 29/32	8 7/8	1 13/16	2 5/16	5/8	1	5	1 7/32	1 9/32	7.87
	2	MPS232N♦●□Δ											
212	2 3/16	MPS235N♦●□Δ	2 3/4	7 1/2	9 1/2	1 57/64	2 3/8	5/8	1 3/16	5 7/16	1 1/8	1 5/16	10.24
214	2 7/16	MPS239N●□Δ♦	3	8 1/4	10 3/4	2 15/64	2 11/16	3/4	1 5/32	6	1 1/2	1 7/16	13.31
	2 1/2	MPS240N●□Δ♦											
215	2 11/16	MPS243N●□Δ♦	3 1/2	9 1/8	12	2 17/64	2 7/8	7/8	1 7/32	6 21/32	1 7/8	1 15/32	17.36
216	2 15/16	MPS247N●□Δ♦	3 1/2	9 1/4	12	2 23/64	3	7/8	1 9/32	6 7/8	1 3/4	1 1/2	19.32
	3	MPS248N●□Δ♦											
218	3 3/16	MPS251N●□Δ♦	4	10 7/8	14	2 33/64	3 3/8	7/8	1 11/32	7 7/8	1 15/16	1 9/16	27.52
	3 7/16	MPS255N●□Δ♦											
	3 1/2	MPS256N●□Δ♦											

Additional Notes

Please call 1-866-REXNORD for availability

Lubrication fitting tap size, 1/8 in PT

Base to centerline tolerance, +/- .005 in *(+/- 0.13 mm)*

Lip seals standard

♦ Available with E1 viton seals for all sizes

Available with free running style seals, add suffix ● FF, □ HFF or Δ MHFF for all size codes

For the Selection Guide, Load Ratings and Speed Limits, see the Link Belt 200 Series Medium Duty Ball Bearings Engineering section on pages 404 - 407.

Note: Dimensions subject to change. Certified dimensions of ordered material furnished on request.

MFXCL200N

Interchange: *F2BDLM, MSFT-T*

Photo Shows a 2-Bolt Ball Bearing Flanged Unit

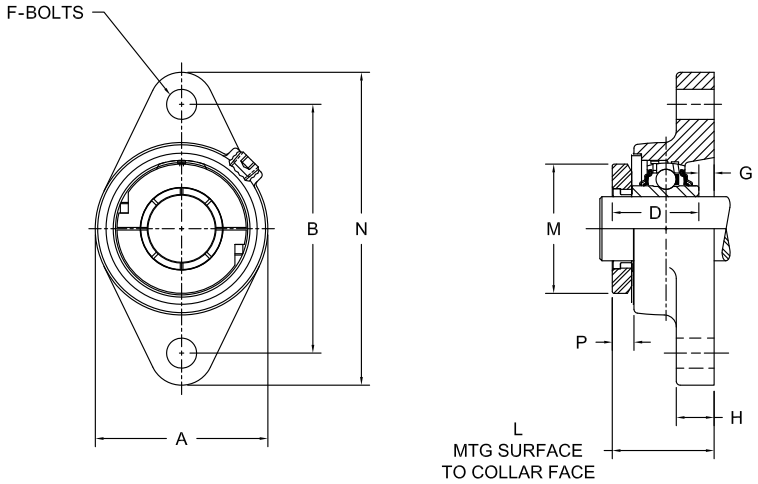

Product Features

- Corrosion-resistant powder coating
- Cast iron housing
- Broad range of sealing options
- Centrik-Lok shaft locking device
- Alignable & relubricatable
- See Features and Benefits for additional info on pages 400 - 401.

Bearing Dimensions

Size Code	Shaft Diameter	Part Number	B Distance Between Bolt Holes	L Mounting Surface to Collar Face	A	D	F Bolts	G	H	M Collar O.D.	N	P	Approx. Weight
206	1	MFXCL216N♦●□Δ	4 19/32	1 7/16	3 3/16	1 5/16	7/16	1/8	17/32	2 19/32	5 9/16	9/16	2.54
207	1 3/16	MFXCL219N♦●□Δ	5 1/8	1 5/8	3 11/16	1 15/32	1/2	5/32	9/16	3 1/16	6 1/8	21/32	3.32
208	1 7/16	MFXCL223N♦●□Δ	5 21/32	1 55/64	4 1/8	1 25/32	1/2	11/64	9/16	3 3/16	6 3/4	21/32	4.55
209	1 1/2	MFXCL224N♦●□Δ	5 27/32	1 7/8	4 3/8	1 25/32	9/16	11/64	9/16	3 3/8	7 1/16	23/32	5.03
210	1 11/16	MFXCL227N♦●□Δ	6 3/16	1 61/64	4 9/16	1 51/64	9/16	5/32	5/8	3 3/4	7 15/32	23/32	5.59
	1 3/4	MFXCL228N♦●□Δ											
211	1 15/16	MFXCL231N♦●□Δ	7 1/4	2 5/16	5	1 57/64	5/8	5/32	5/8	4 3/32	8 1/2	11/16	7.69
	2	MFXCL232N♦●□Δ											

Additional Notes

Please call 1-866-REXNORD for availability
Lubrication fitting tap size, 1/8 in PT
Lip seals standard
♦ Available with E1 viton seals
Available with free running style seals, add suffix ● FF, □ HFF or Δ MHFF
Nickel plated housings available through all size codes, add suffix K75

For the Selection Guide, Load Ratings and Speed Limits, see the Link Belt 200 Series Medium Duty Ball Bearings Engineering section on pages 404 - 407.

Note: Dimensions subject to change. Certified dimensions of ordered material furnished on request.

MFXS200

Interchange: *F2BSCM, FYTM-TF, UCFTX, MSFT, YCJTM*

Photo Shows a 2-Bolt Ball Bearing Flanged Unit

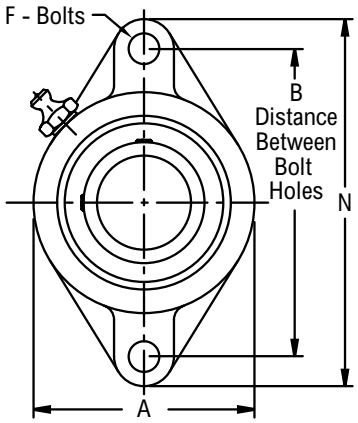

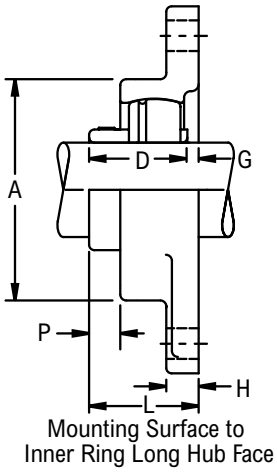

Product Features

- Corrosion-resistant powder coating
- Cast iron housing
- Broad range of sealing options
- Spring locking setscrew mount
- Alignable & relubricatable
- See Features and Benefits for additional info on pages 400 - 401.

Bearing Dimensions

Size Code	Shaft Diameter	Part Number	B Distance Between Bolt Holes	L Mounting Surface to Inner Ring Long Hub Face	A	D	F Bolts	G	H	N	P	Approx. Weight
206	1	MFXS216N	4 19/32	1 1/2	3 3/16	1 11/32	7/16	9/64	17/32	5 9/16	9/16	1.79
	30.00	*MFXS2M30N*	*116.68*	*38.10*	*81.00*	*34.14*	*10.00*	*3.60*	*13.50*	*141.30*	*14.30*	*0.80*
207	1 3/16	MFXS219N	5 1/8	1 23/32	3 11/16	1 9/16	1/2	5/32	9/16	6 1/8	21/32	2.69
	35.00	*MFXS2M35N*	*130.18*	*43.70*	*93.70*	*39.67*	*12.00*	*3.60*	*14.30*	*155.60*	*16.70*	*1.20*
208	1 7/16	MFXS223N	5 21/32	1 13/16	4 1/8	1 21/32	1/2	11/64	9/16	6 3/4	21/32	3.47
	40.00	*MFXS2M40N*	*143.67*	*46.00*	*104.80*	*42.06*	*12.00*	*4.00*	*14.30*	*171.40*	*16.70*	*1.50*
209	1 1/2	MFXS224N	5 27/32	1 29/32	4 3/8	1 49/64	9/16	11/64	9/16	7 1/16	23/32	3.46
210	1 11/16	MFXS227N	6 3/16	1 29/32	4 9/16	1 13/16	9/16	5/32	5/8	7 15/32	23/32	4.43
	1 3/4	MFXS228N										4.34
211	1 15/16	MFXS231N	7 1/4	2	5	1 13/16	5/8	5/32	23/32	8 1/2	11/16	5.74
	2	MFXS232N										6.04

Additional Notes

- Please call 1-866-REXNORD for availability
- Lubrication fitting tap size: for size codes 203 thru 205, 1/4-28 UNF: for all other size codes, 1/8 in PT
- Lip seals standard
- ♦ Available with E1 viton seals
- Available with free running style seals, add suffix ● FF, □ HFF or Δ MHFF
- Nickel plated housings available, add suffix K75
- For the Selection Guide, Load Ratings and Speed Limits, see the Link Belt 200 Series Medium Duty Ball Bearings Engineering section on pages 404 - 407.
- Note: Dimensions subject to change. Certified dimensions of ordered material furnished on request.

MFCL200N

Interchange: *F4BDLM, MSF-T*

Photo Shows a 4-Bolt Ball Bearing Flanged Unit

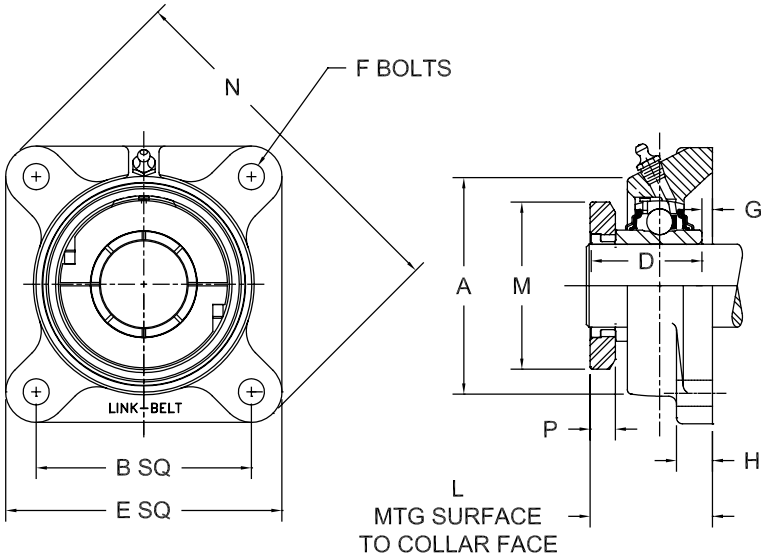

Product Features

- Corrosion-resistant powder coating
- Cast iron housing
- Broad range of sealing options
- Centrik-Lok shaft locking device
- Alignable & relubricatable
- See Features and Benefits for additional info on pages 400 - 401.

Bearing Dimensions

Size Code	Shaft Diameter	Part Number	B Distance Between Bolt Holes	L Mounting Surface to Collar Face	A	D	E	F Bolts	G	H	M Collar O.D.	N	P	Approx. Weight
206	1	MFCL216N♦●□Δ	3 1/4	1 7/16	3 3/16	1 5/16	4 1/4	7/16	1/8	1/2	2 19/32	5 19/32	9/16	2.54
207	1 3/16	MFCL219N♦●□Δ	3 5/8	1 5/8	3 11/16	1 15/32	4 5/8	1/2	5/32	1/2	3 1/16	6 1/8	21/32	3.32
208	1 7/16	MFCL223N♦●□Δ	4	1 55/64	4 1/16	1 25/32	5 1/4	1/2	11/64	9/16	3 3/16	6 25/32	21/32	4.55
209	1 1/2	MFCL224N♦●□Δ	4 1/8	1 7/8	4 5/16	1 25/32	5 3/8	9/16	11/64	9/16	3 3/8	7 3/32	23/32	5.03
210	1 11/16	MFCL227N♦●□Δ	4 3/8	1 61/64	4 1/2	1 51/64	5 5/8	9/16	5/32	9/16	3 3/4	7 7/16	23/32	5.59
	1 3/4	MFCL228N♦●□Δ												
211	1 15/16	MFCL231N♦●□Δ	5 1/8	2 5/16	5 3/16	1 57/64	6 3/8	5/8	5/32	5/8	4 3/32	8 1/2	11/16	7.69
	2	MFCL232N♦●□Δ												
212	2 3/16	MFCL235N♦●□Δ	5 5/8	2 3/8	5 7/16	2 5/32	6 7/8	5/8	13/64	11/16	4 9/32	9 9/32	21/32	9.34
	2 1/4	MFCL236N♦●□Δ												
214	2 7/16	MFCL239N●□Δ♦	5 7/8	2 19/32	6 1/8	2 5/16	7 3/8	5/8	19/64	11/16	4 13/16	9 13/16	23/32	12.27
	2 1/2	MFCL240N●□Δ♦												
215	2 11/16	MFCL243N●□Δ♦	6	2 25/32	6 7/16	2 23/64	7 3/4	3/4	9/32	3/4	5 1/4	10 1/4	23/32	13.75
216	2 15/16	MFCL247N●□Δ♦	6	3 7/64	6 3/4	2 25/32	7 3/4	3/4	21/64	13/16	5 47/64	10 1/4	11/16	15.25
	3	MFCL248N●□Δ♦												
218	3 3/16	MFCL251N●□Δ♦	6 3/4	2 31/32	7 3/4	2 19/32	8 7/16	3/4	3/8	15/16	5 47/64	11 1/4	11/16	21.10
	3 7/16	MFCL255N●□Δ♦												
	3 1/2	MFCL256N●□Δ♦												

Additional Notes

- Please call 1-866-REXNORD for availability
- Lubrication fitting tap size, 1/8 in PT
- Lip seals standard
- ♦ Available with E1 viton seals
- Available with free running style seals, add suffix ● FF, □ HFF or Δ MHFF
- Nickel plated housings available through all size codes, add suffix K75

For the Selection Guide, Load Ratings and Speed Limits, see the Link Belt 200 Series Medium Duty Ball Bearings Engineering section on pages 404 - 407.

Note: Dimensions subject to change. Certified dimensions of ordered material furnished on request.

MFS200N

Interchange: *F4BSCM, FYM-TF, UCFX, MSF, YCJM*

Photo Shows a 4-Bolt Ball Bearing Flanged Unit

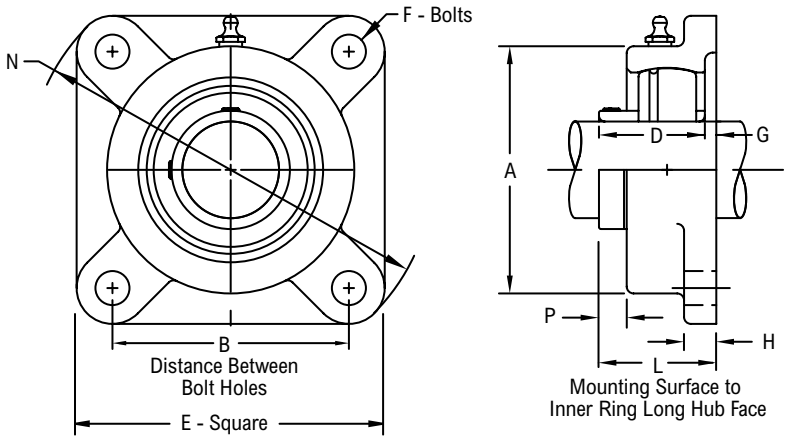

Product Features

- Corrosion-resistant powder coating
- Cast iron housing
- Broad range of sealing options
- Spring locking setscrew mount
- Alignable & relubricatable
- See Features and Benefits for additional info on pages 400 - 401.

Bearing Dimensions

Size Code	Shaft Diameter	Part Number	B Distance Between Bolt Holes	L Mounting Surface to Inner Ring Long Hub Face	A	D	E	F Bolts	G	H	N	P	Approx. Weight
206	1	MFS216N♦●□Δ	3 1/4	1 1/2	3 3/16	1 11/32	4 1/4	7/16	9/64	1/2	5 19/32	9/16	2.58
207	1 3/16	MFS219N♦●□Δ	3 5/8	1 23/32	3 11/16	1 9/16	4 5/8	1/2	9/64	1/2	6 1/8	21/32	3.32
208	1 7/16	MFS223N♦●□Δ	4	1 13/16	4 1/16	1 21/32	5 1/4	1/2	5/32	9/16	6 25/32	21/32	4.55
209	1 1/2	MFS224N♦●□Δ	4 1/8	1 29/32	4 5/16	1 49/64	5 3/8	1/2	1/8	9/16	7 3/32	23/32	5.03
210	1 11/16	MFS227N♦●□Δ	4 3/8	1 29/32	4 1/2	1 13/16	5 5/8	9/16	7/64	9/16	7 7/16	23/32	5.59
	1 3/4	MFS228N♦●□Δ											
211	1 15/16	MFS231N♦●□Δ	5 1/8	2	5 3/16	1 13/16	6 3/8	5/8	11/64	5/8	8 1/2	11/16	7.69
	2	MFS232N♦●□Δ											
212	2 3/16	MFS235N♦●□Δ	5 5/8	2 3/32	5 7/16	1 57/64	6 7/8	5/8	13/64	11/16	9 9/32	21/32	9.34
214	2 7/16	MFS239N●□Δ♦	5 7/8	2 3/8	6 1/8	2 15/64	7 3/8	5/8	1/8	11/16	9 13/16	23/32	12.27
	2 1/2	MFS240N●□Δ♦											
215	2 11/16	MFS243N●□Δ♦	6	2 13/32	6 7/16	2 17/64	7 3/4	3/4	1/8	3/4	10 1/4	23/32	13.75
216	2 15/16	MFS247N●□Δ♦	6	2 17/32	6 3/4	2 23/64	7 3/4	3/4	11/64	13/16	10 1/4	11/16	15.25
	3	MFS248N●□Δ♦											
218	3 3/16	MFS251N●□Δ♦	6 3/4	2 47/64	7 3/4	2 33/64	8 7/16	3/4	7/32	15/16	11 1/4	21/32	21.10
	3 7/16	MFS255N●□Δ♦											
	3 1/2	MFS256N●□Δ♦											

Additional Notes

- Please call 1-866-REXNORD for availability
- Lubrication fitting tap size, 1/8 in PT
- Lip seals standard
- ♦ Available with E1 viton seals for all sizes
- Available with free running style seals, add suffix ● FF, □ HFF or Δ MHFF for all size codes

For the Selection Guide, Load Ratings and Speed Limits, see the Link Belt 200 Series Medium Duty Ball Bearings Engineering section on pages 404 - 407.

Note: Dimensions subject to change. Certified dimensions of ordered material furnished on request.

MFCCL200N

Interchange: *FCDLM, MFC-T*

Photo Shows a 4-Bolt Ball Bearing Flanged Cartridge Unit

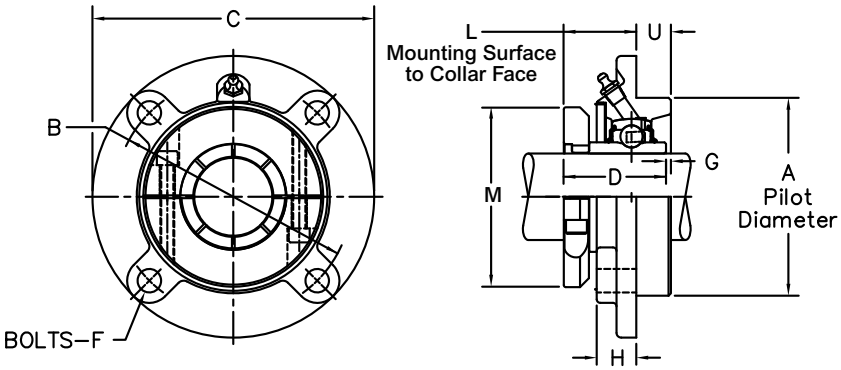

Product Features

- Corrosion-resistant powder coating
- Cast iron housing
- Broad range of sealing options
- Centrik-Lok shaft locking device
- Alignable & relubricatable
- See Features and Benefits for additional info on pages 400 - 401.

Bearing Dimensions

Size Code	Shaft Diameter	Part Number	A Pilot Diameter	B Bolt Hole Circle Diameter	L Mounting Surface to Collar Face	C	D	F Bolts	G & G1	H	M Collar O.D.	U	Approx. Weight
207	1 3/16	MFCCL219N♦●□Δ	3.375	4 1/8	1 7/16	5	1 15/32	7/16	11/64	7/8	3 1/16	3/8	3.14
208	1 7/16	MFCCL223N♦●□Δ	3.625	4 3/8	1 37/64	5 1/4	1 25/32	7/16	5/32	7/8	3 3/16	7/16	3.69
209	1 1/2	MFCCL224N♦●□Δ	3.625	4 3/8	1 9/16	5 1/4	1 25/32	7/16	11/64	7/8	3 3/8	7/16	3.85
210	1 11/16	MFCCL227N♦●□Δ	4.250	5 1/8	1 21/32	6 1/8	1 51/64	1/2	11/64	7/8	3 3/4	15/32	5.72
	1 3/4	MFCCL228N♦●□Δ											
211	1 15/16	MFCCL231N♦●□Δ	4.500	5 3/8	1 39/64	6 3/8	1 57/64	1/2	15/64	7/8	4 3/32	5/8	5.96
	2	MFCCL232N♦●□Δ											
212	2 3/16	MFCCL235N♦●□Δ	5.000	6	1 15/16	7 1/8	2 5/32	9/16	37/64	1	4 9/32	1	8.52
	2 1/4	MFCCL236N♦●□Δ											
214	2 7/16	MFCCL239N♦●□Δ	5.500	6 1/2	1 15/16	7 5/8	2 5/16	9/16	1/4	1	4 13/16	1	10.27
	2 1/2	MFCCL240N♦●□Δ											
215	2 11/16	MFCCL243N♦●□Δ	6.375	7 1/2	1 15/16	8 3/4	2 23/64	5/8	1/4	1	5 1/4	1	14.07
216	2 15/16	MFCCL247N♦●□Δ	6.375	7 1/2	2 17/64	8 3/4	2 25/32	5/8	11/64	1 1/8	5 47/64	1	14.28
	3	MFCCL248N♦●□Δ											
218	3 3/16	MFCCL251N♦●□Δ	7.375	8 5/8	2 1/64	10 1/4	2 19/32	3/4	5/32	1 1/8	5 47/64	1 1/8	21.90
	3 7/16	MFCCL255N♦●□Δ											
	3 1/2	MFCCL256N♦●□Δ											

Additional Notes

- Please call 1-866-REXNORD for availability
- Lubrication fitting tap size, 1/8 in PT
- Pilot Diameter tolerance, +.000 in/-.002 in *(+0.00 mm/-0.05 mm)*
- Bore tolerance for mounting, +.002 in/-.000 in *(+0.05 mm/-0.00 mm)*
- For size codes 207 & 212, use the G dimension; for all other size codes use G1
- Lip seals standard
- ♦ Available with E1 viton seals
- Available with free running style seals, add suffix ● FF, □ HFF or Δ MHFF
- Nickel plated housings available through all size codes, add suffix K75
- For the Selection Guide, Load Ratings and Speed Limits, see the Link Belt 200 Series Medium Duty Ball Bearings Engineering section on pages 404 - 407.
- Note: Dimensions subject to change. Certified dimensions of ordered material furnished on request.

MFCS200N

Interchange: *FCSCM, MFC, RFC*

Photo Shows a 4-Bolt Ball Bearing Flanged Cartridge Unit

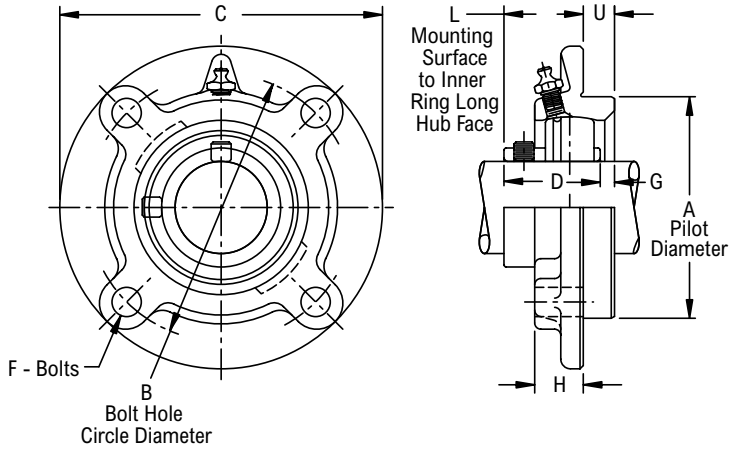

Product Features

- Corrosion-resistant powder coating
- Cast iron housing
- Broad range of sealing options
- Spring locking setscrew mount
- Alignable & relubricatable
- See Features and Benefits for additional info on pages 400 - 401.

Bearing Dimensions

Size Code	Shaft Diameter	Part Number	A Pilot Diameter	B Bolt Hole Circle Diameter	L Mounting Surface to Inner Ring Long Hub Face	C	D	F Bolts	G	H	U	Approx. Weight
207	1 3/16	MFCS219N♦●□Δ	3.375	4 1/8	1 33/64	5	1 9/16	7/16	17/64	7/8	3/8	3.14
208	1 7/16	MFCS223N♦●□Δ	3.625	4 3/8	1 17/32	5 1/4	1 21/32	7/16	1/4	7/8	7/16	3.69
209	1 1/2	MFCS224N♦●□Δ	3.625	4 3/8	1 37/64	5 1/4	1 49/64	7/16	3/16	7/8	7/16	3.85
210	1 11/16	MFCS227N♦●□Δ	4.250	5 1/8	1 19/32	6 1/8	1 13/16	1/2	13/64	7/8	15/32	5.72
	1 3/4	MFCS228N♦●□Δ										
211	1 15/16	MFCS231N♦●□Δ	4.500	5 3/8	1 35/64	6 3/8	1 13/16	1/2	19/64	7/8	5/8	5.96
	2	MFCS232N♦●□Δ										
212	2 3/16	MFCS235N♦●□Δ	5.000	6	1 11/64	7 1/8	1 57/64	9/16	37/64	1	1	8.52
214	2 7/16	MFCS239N●□Δ♦	5.500	6 1/2	1 23/32	7 5/8	2 15/64	9/16	27/64	1	1	10.27
	2 1/2	MFCS240N●□Δ♦										
215	2 11/16	MFCS243N●□Δ♦	6.375	7 1/2	1 23/32	8 3/4	2 17/64	5/8	25/64	1	1	14.07
216	2 15/16	MFCS247N●□Δ♦	6.375	7 1/2	1 11/16	8 3/4	2 23/64	5/8	21/64	1 1/8	1	13.92
	3	MFCS248N●□Δ♦										
218	3 3/16	MFCS251N●□Δ♦	7.375	8 5/8	1 51/64	10 1/4	2 33/64	3/4	25/64	1 1/8	1 1/8	21.50
	3 7/16	MFCS255N●□Δ♦										
	3 1/2	MFCS256N●□Δ♦										

Additional Notes

- Please call 1-866-REXNORD for availability
- Lubrication fitting tap size, 1/8 in PT
- Pilot Diameter tolerance, +.000 in/-.002 in *(+0.00 mm/-0.05 mm)*
- Bore tolerance for mounting, +.002 in/-.000 in *(+0.05 mm/-0.00 mm)*
- Lip seals standard
- ♦ Available with E1 viton seals for all sizes
- Available with free running style seals, add suffix ● FF, □ HFF or Δ MHFF for all size codes

For the Selection Guide, Load Ratings and Speed Limits, see the Link Belt 200 Series Medium Duty Ball Bearings Engineering section on pages 404 - 407.

Note: Dimensions subject to change. Certified dimensions of ordered material furnished on request.

MTHCL200N

Interchange: *WSTUDLM, MST-T*

Photo Shows a Ball Bearing Take-up Unit

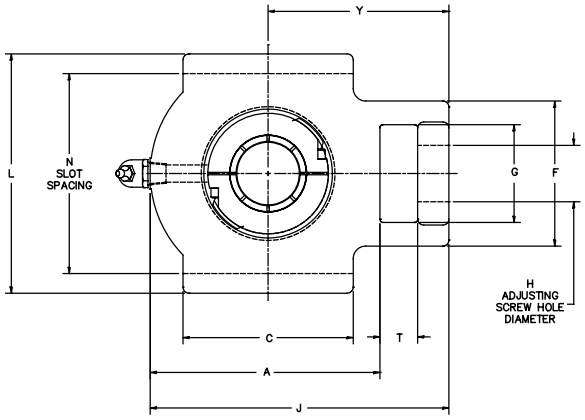

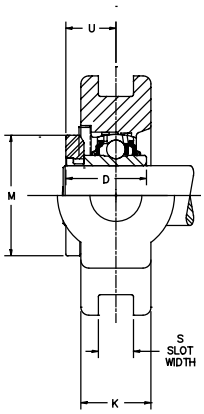

Product Features

- Corrosion-resistant powder coating
- Cast iron housing
- Wide slot design
- Broad range of sealing options
- Centrik-Lok shaft locking device
- Alignable & relubricatable
- See Features and Benefits for additional info on pages 400 - 401.

Bearing Dimensions

Size Code	Shaft Diameter	Part Number	H Adjusting Screw Hole Diameter	N Slot Spacing	S Slot Width	A	C	D	F	G	J	K	L	M Collar O.D.	T	U	Y	Approx. Weight
206	1	MTHCL216N♦●□Δ	7/8	3.500	0.531	3 3/8	2 1/4	1 5/16	2 3/16	1 7/16	4 1/2	1 9/16	4 1/8	2 19/32	11/16	29/32	2 3/4	2.88
207	1 3/16	MTHCL219N♦●□Δ	7/8	3.500	0.531	4	2 1/2	1 31/64	2 3/8	1 7/16	5	1 9/16	4 1/8	3 1/16	11/16	1 1/32	3 1/16	3.20
208	1 7/16	MTHCL223N♦●□Δ	1 1/8	3.969	0.688	4 3/16	3 1/4	1 45/64	3 1/4	1 15/16	5 5/8	2 1/16	4 3/4	3 3/16	7/8	1 7/32	3 1/2	5.29
209	1 1/2	MTHCL224N♦●□Δ	1 1/8	3.969	0.688	4 3/16	3 1/4	1 45/64	3 1/4	1 15/16	5 5/8	2 1/16	4 3/4	3 3/8	7/8	1 7/32	3 7/16	4.96
210	1 11/16	MTHCL227N♦●□Δ	1 1/8	3.969	0.688	4 7/16	3 1/4	1 51/64	3 1/4	1 15/16	5 7/8	2 1/16	4 3/4	3 3/4	7/8	1 5/16	3 9/16	5.21
	1 3/4	MTHCL228N♦●□Δ																
211	1 15/16	MTHCL231N♦●□Δ	1 3/8	5.094	1.062	4 7/8	3 3/4	1 57/64	4	2 1/2	6 13/16	2 1/2	5 7/8	4 3/32	1 3/16	1 11/32	4 3/16	8.87
	2	MTHCL232N♦●□Δ																
212	2 3/16	MTHCL235N♦●□Δ	1 3/8	5.094	1.062	5 5/8	4	2 5/32	4	2 1/2	7 9/16	2 1/2	5 7/8	4 9/32	1 3/16	1 19/32	4 11/16	8.79
214	2 7/16	MTHCL239N●□Δ♦	1 5/8	5.906	1.062	6 19/32	4 3/4	2 5/16	4 3/8	2 3/4	8 11/16	2 3/4	6 11/16	4 13/16	1 5/16	1 21/32	5 3/8	15.09
	2 1/2	MTHCL240N●□Δ♦																
215	2 11/16	MTHCL243N●□Δ♦	1 5/8	5.906	1.062	6 27/32	4 3/4	2 23/64	4 3/8	2 3/4	8 15/16	2 3/4	6 11/16	5 1/4	1 5/16	1 7/16	5 1/2	14.87

Additional Notes

- Please call 1-866-REXNORD for availability
- Lubrication fitting tap size, 1/8 in PT
- Lip seals standard
- ♦ Available with E1 viton seals
- Available with free running style seals, add suffix ● FF, □ HFF or Δ MHFF
- Nickel plated housings available through all size codes, add suffix K75

For the Selection Guide, Load Ratings and Speed Limits, see the Link Belt 200 Series Medium Duty Ball Bearings Engineering section on pages 404 - 407.

Note: Dimensions subject to change. Certified dimensions of ordered material furnished on request.

MTHS200N

Interchange: *WSTUSCM, TUM-TF, MST*

Photo Shows a Ball Bearing Take-up Unit

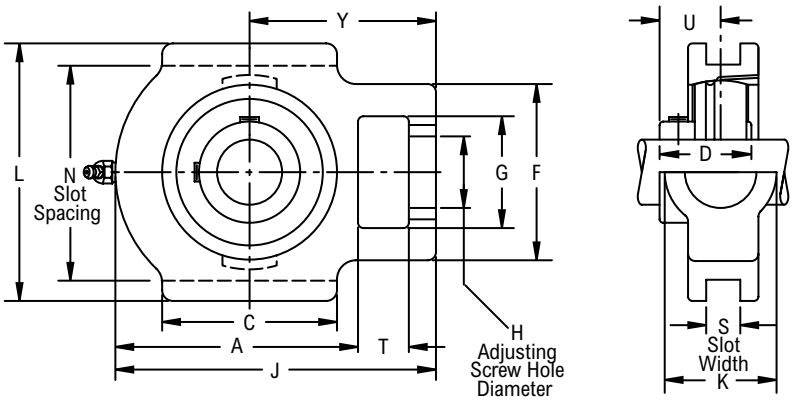

Product Features

- Corrosion-resistant powder coating
- Cast iron housing
- Wide slot design
- Broad range of sealing options
- Spring locking setscrew mount
- Alignable & relubricatable
- See Features and Benefits for additional info on pages 400 - 401.

Bearing Dimensions

Size Code	Shaft Diameter	Part Number	H Adjusting Screw Hole Diameter	N Slot Spacing	S Slot Width	A	C	D	F	G	J	K	L	T	U	Y	Approx. Weight
206	1	MTHS216N♦●□Δ	7/8	3.500	0.531	3 3/8	2 1/4	1 11/32	2 3/16	1 7/16	4 1/2	1 9/16	4 1/8	11/16	61/64	2 3/4	2.88
207	1 3/16	MTHS219N♦●□Δ	7/8	3.500	0.531	4	2 1/2	1 9/16	2 3/8	1 7/16	5	1 9/16	4 1/8	11/16	1 7/64	3 1/16	3.20
208	1 7/16	MTHS223N♦●□Δ	1 1/8	3.969	0.688	4 3/16	3 1/4	1 21/32	3 1/4	1 15/16	5 5/8	2 1/16	4 3/4	7/8	1 11/64	3 1/2	5.29
209	1 1/2	MTHS224N♦●□Δ	1 1/8	3.969	0.688	4 3/16	3 1/4	1 49/64	3 1/4	1 15/16	5 5/8	2 1/16	4 3/4	7/8	1 15/64	3 7/16	4.96
210	1 11/16	MTHS227N♦●□Δ	1 1/8	3.969	0.688	4 7/16	3 1/4	1 13/16	3 1/4	1 15/16	5 7/8	2 1/16	4 3/4	7/8	1 17/64	3 9/16	5.21
	1 3/4	MTHS228N♦●□Δ															
211	1 15/16	MTHS231N♦●□Δ	1 3/8	5.094	1.062	4 7/8	3 3/4	1 13/16	4	2 1/2	6 13/16	2 1/2	5 7/8	1 3/16	1 9/32	4 3/16	8.87
	2	MTHS232N♦●□Δ															
212	2 3/16	MTHS235N♦●□Δ	1 3/8	5.094	1.062	5 5/8	4	1 57/64	4	2 1/2	7 9/16	2 1/2	5 7/8	1 3/16	1 5/16	4 11/16	8.79
	2 1/4	MTHS236N●□Δ♦															
214	2 7/16	MTHS239N●□Δ♦	1 5/8	5.906	1.062	6 19/32	4 3/4	2 15/64	4 3/8	2 3/4	8 11/16	2 3/4	6 11/16	1 5/16	1 7/16	5 3/8	15.09
	2 1/2	MTHS240N●□Δ♦															
215	2 11/16	MTHS243N●□Δ♦	1 5/8	5.906	1.062	6 27/32	4 3/4	2 17/64	4 3/8	2 3/4	8 15/16	2 3/4	6 11/16	1 5/16	1 15/32	5 1/2	14.87

Additional Notes

- Please call 1-866-REXNORD for availability
- Lubrication fitting tap size, 1/8 in PT
- Lip seals standard
- ♦ Available with E1 viton seals for all sizes
- Available with free running style seals, add suffix ● FF, □ HFF or Δ MHFF for all size codes

For the Selection Guide, Load Ratings and Speed Limits, see the Link Belt 200 Series Medium Duty Ball Bearings Engineering section on pages 404 - 407.

Note: Dimensions subject to change. Certified dimensions of ordered material furnished on request.

MCHBS200

Interchange: *SCHB, UCHA200*

Photo Shows a Screw Conveyor Hanger Ball Bearing Unit

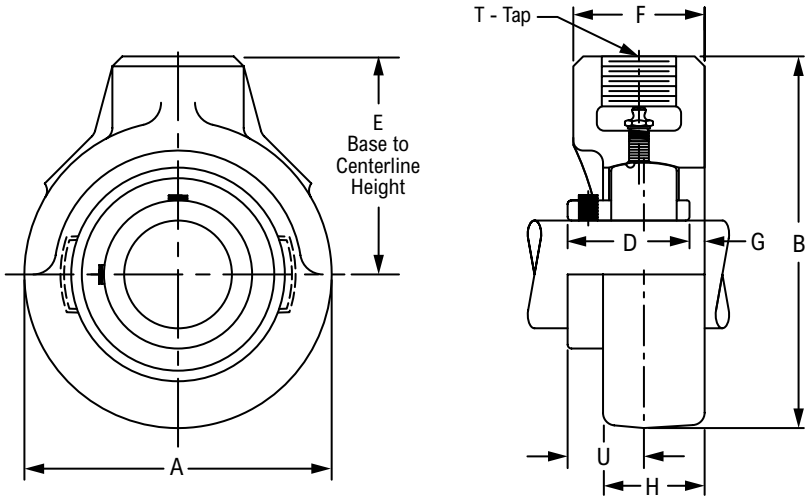

Product Features

- Corrosion-resistant powder coating
- Cast iron housing
- Broad range of sealing options
- Spring locking setscrew mount
- Alignable & relubricatable
- See Features and Benefits for additional info on pages 400 - 401.

Bearing Dimensions

Size Code	Shaft Diameter	Part Number	E Base to Centerline Height	T Depth	T Tap	A	B	D	F	G	H	U	Approx. Weight
206	1	MCHBS216N♦● □Δ	2 1/2	5/8	3/4-14	3 3/8	4 3/16	1 11/32	1 21/32	7/16	1 7/32	61/64	2.34
207	1 3/16	MCHBS219N♦● □Δ	2 3/4	5/8	3/4-14	3 7/8	4 11/16	1 9/16	1 21/32	3/8	1 9/32	1 7/64	3.35
208	1 7/16	MCHBS223N♦● □Δ	2 7/8	5/8	3/4-14	4	4 7/8	1 21/32	1 21/32	11/32	1 11/32	1 11/64	3.44
210	1 11/16	MCHBS227N♦● □Δ	3 1/4	13/16	1-11 ½	4 5/8	5 9/16	1 13/16	1 7/8	13/32	1 13/32	1 17/64	5.06
	1 3/4	MCHBS228N♦● □Δ											4.98
212	2 3/16	MCHBS235N♦● □Δ	4	1 1/8	1 ¼-11 ½	5 5/8	6 13/16	1 57/64	2 5/16	37/64	1 5/8	1 5/16	8.44
215	2 11/16	MCHBS243N♦● □Δ	4 5/8	1 1/4	1 ½-11 ½	6 1/2	7 7/8	2 17/64	2 3/4	37/64	1 31/32	1 15/32	12.27
216	2 15/16	MCHBS247N♦● □Δ	4 7/8	1 1/4	1 ½-11 ½	7	8 3/8	2 23/64	2 13/16	35/64	2 1/16	1 1/2	16.00
	3	MCHBS248N♦● □Δ											15.82
218	3 3/16	MCHBS251N♦● □Δ	6	1 3/4	2-11 ½	8 5/16	10 5/32	2 33/64	3 1/2	25/32	2 1/8	1 9/16	25.66
	3 7/16	MCHBS255N♦● □Δ											24.77
	3 1/2	MCHBS256N♦● □Δ											24.58

Additional Notes

Please call 1-866-REXNORD for availability

Lubrication fitting tap size, 1/8 in PT

Lip seals standard

♦ Available with E1 viton seals for all sizes

Available with free running style seals, add suffix ● FF, □ HFF or Δ MHFF for all size codes

For the Selection Guide, Load Ratings and Speed Limits, see the Link Belt 200 Series Medium Duty Ball Bearings Engineering section on pages 404 - 407.

Note: Dimensions subject to change. Certified dimensions of ordered material furnished on request.

MEHBS200

Interchange: *SEHB*

Photo Shows a Screw Conveyor Hanger Ball Bearing Unit

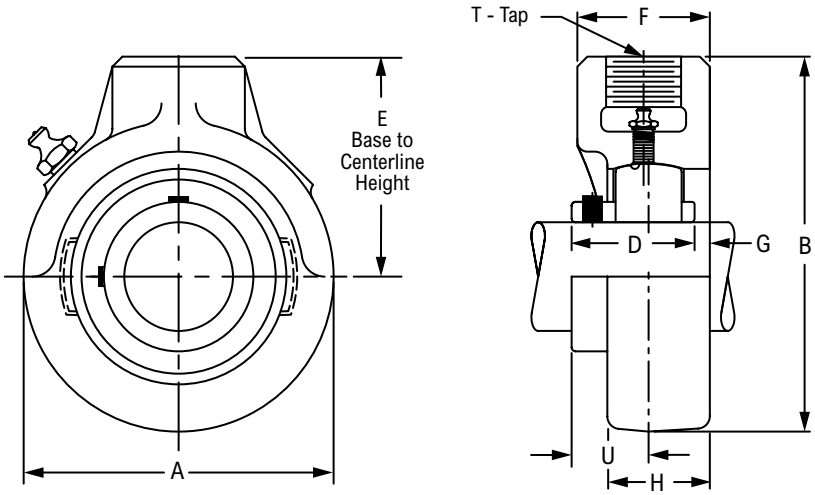

Product Features

- Corrosion-resistant powder coating
- Cast iron housing
- Broad range of sealing options
- Spring locking setscrew mount
- Alignable & relubricatable
- See Features and Benefits for additional info on pages 400 - 401.

Bearing Dimensions

Size Code	Shaft Diameter	Part Number	E Base to Centerline Height	T		A	B	D	F	G	H	U	Approx. Weight
				Depth	Tap								
206	1	MEHBS216N♦● □Δ	2 1/2	5/8	3/4-14	3 3/8	4 3/16	1 11/32	1 21/32	7/16	1 7/32	61/64	2.34
207	1 3/16	MEHBS219N♦● □Δ	2 3/4	5/8	3/4-14	3 7/8	4 11/16	1 9/16	1 21/32	3/8	1 9/32	1 7/64	3.35
208	1 7/16	MEHBS223N♦● □Δ	2 7/8	5/8	3/4-14	4	4 7/8	1 21/32	1 21/32	11/32	1 11/32	1 11/64	3.44
210	1 11/16	MEHBS227N♦● □Δ	3 1/4	13/16	1-11 ½	4 5/8	5 9/16	1 13/16	1 7/8	13/32	1 13/32	1 17/64	5.06
	1 3/4	MEHBS228N♦● □Δ											4.98
212	2 3/16	MEHBS235N♦● □Δ	4	1 1/8	1 ¼-11 ½	5 5/8	6 13/16	1 57/64	2 5/16	37/64	1 5/8	1 5/16	8.44
215	2 11/16	MEHBS243N♦● □Δ	4 5/8	1 1/4	1 ½-11 ½	6 1/2	7 7/8	2 17/64	2 3/4	37/64	1 31/32	1 15/32	12.27
216	2 15/16	MEHBS247N♦● □Δ	4 7/8	1 1/4	1 ½-11 ½	7	8 3/8	2 23/64	2 13/16	35/64	2 1/16	1 1/2	16.00
	3	MEHBS248N♦● □Δ											15.82
218	3 3/16	MEHBS251N♦● □Δ	6	1 3/4	2-11 ½	8 5/16	10 5/32	2 33/64	3 1/2	25/32	2 1/8	1 9/16	25.66
	3 7/16	MEHBS255N♦● □Δ											24.77
	3 1/2	MEHBS256N♦● □Δ											24.58

Additional Notes

Please call 1-866-REXNORD for availability

Lubrication fitting tap size, 1/8 in PT

Lip seals standard

♦ Available with E1 viton seals for all sizes

Available with free running style seals, add suffix ● FF, □ HFF or Δ MHFF for all size codes

For the Selection Guide, Load Ratings and Speed Limits, see the Link Belt 200 Series Medium Duty Ball Bearings Engineering section on pages 404 - 407.

Note: Dimensions subject to change. Certified dimensions of ordered material furnished on request.

MCLG200NLPA

Photo Shows an Unmounted Ball Bearing Unit

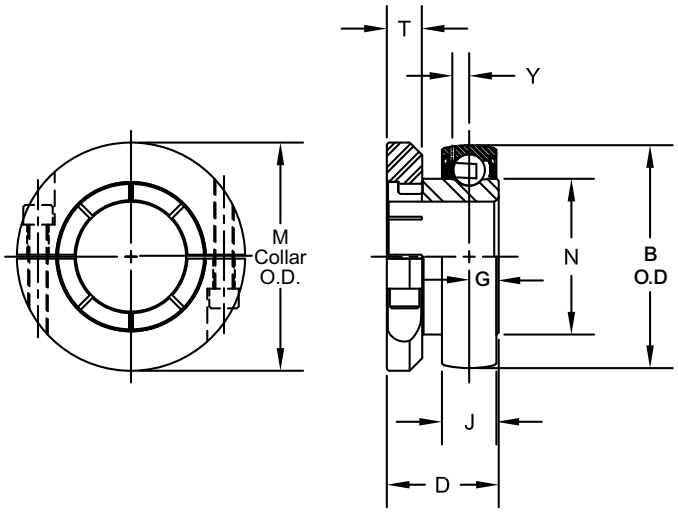

Product Features

Broad range of sealing options
Centrik-Lok shaft locking device
Sealed & relubricatable
Spherical O.D.
See Features and Benefits for additional info on pages 400 - 401.

Bearing Dimensions

Size Code	Shaft Diameter	Part Number	B O.D.	J Outer Ring Width	D	G	M Collar O.D.	N	T Width	T Tap	Y	Approx. Weight
206	1	MCLG216NLPA♦●□Δ	2.4409	0.7087	1 5/16	0.3970	2 19/32	1.587	23/64	#10-32	0.202	0.92
207	1 3/16	MCLG219NLPA♦●□Δ	2.8346	0.7480	1 15/32	0.4420	3 1/16	1.847	7/16	1/4-28	0.227	1.30
208	1 7/16	MCLG223NLPA♦●□Δ	3.1496	0.8661	1 25/32	0.4740	3 3/16	2.083	7/16	1/4-28	0.263	1.61
209	1 1/2	MCLG224NLPA♦●□Δ	3.3465	0.8661	1 25/32	0.4770	3 3/8	2.281	7/16	1/4-28	0.256	1.93
210	1 11/16	MCLG227NLPA♦●□Δ	3.5433	0.8661	1 51/64	0.4860	3 3/4	2.475	9/16	5/16-24	0.256	2.29
	1 3/4	MCLG228NLPA♦●□Δ										
211	1 15/16	MCLG231NLPA♦●□Δ	3.9370	0.9843	1 57/64	0.5410	4 3/32	2.749	9/16	5/16-24	0.298	2.58
	2	MCLG232NLPA♦●□Δ										
212	2 3/16	MCLG235NLPA●□Δ♦	4.3307	1.0630	2 5/32	0.5820	4 9/32	3.012	9/16	5/16-24	0.330	3.44
	2 1/4	MCLG236NLPA●□Δ♦										
214	2 7/16	MCLG239NLPA●□Δ♦	4.9213	1.1545	2 5/16	0.6440	4 13/16	3.433	3/4	3/8-24	0.266	4.67
	2 1/2	MCLG240NLPA●□Δ♦										
215	2 11/16	MCLG243NLPA●□Δ♦	5.1181	1.1835	2 23/64	0.6590	5 1/4	3.632	3/4	3/8-24	0.266	4.78
216	2 15/16	MCLG247NLPA●□Δ♦	5.5118	1.2575	2 25/32	0.6960	5 47/64	3.920	3/4	3/8-24	0.282	5.80
	3	MCLG248NLPA●□Δ♦										
218	3 3/16	MCLG251NLPA●□Δ♦	6.2992	1.3945	2 19/32	0.8040	5 47/64	4.396	3/4	3/8-24	0.313	8.71
	3 7/16	MCLG255NLPA●□Δ♦										8.25
	3 1/2	MCLG256NLPA●□Δ♦										7.63

Additional Notes

Please call 1-866-REXNORD for availability

Bearing O.D. tolerance for size code 206 thru 208, +.0000 in/-.0005 in *(+0.000 mm/-0.013 mm)*: for size code 209 thru 215, +.0000 in/-.0006 in *(+0.000 mm/-0.015 mm)*: for all other size codes, +.0000 in/-.0008 in *(+0.000 mm/-0.020 mm)*

Lip seals standard

♦ Available with E1 viton seals

Available with free running style seals, add suffix ● FF, □ HFF or Δ MHFF

For the Selection Guide, Load Ratings and Speed Limits, see the Link Belt 200 Series Medium Duty Ball Bearings Engineering section on pages 404 - 407.

Note: Dimensions subject to change. Certified dimensions of ordered material furnished on request.

MSG200NLPA

Photo Shows an Unmounted Ball Bearing Unit

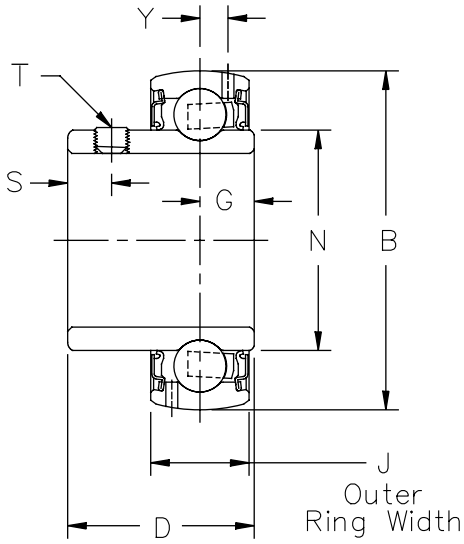

Product Features

Broad range of sealing options
Spring locking setscrew mount
Sealed & relubricatable
Spherical O.D.
See Features and Benefits for additional info on pages 400 - 401.

Bearing Dimensions

Size Code	Shaft Diameter	Part Number	B O.D.	J Outer Ring Width	D	G	N	S	T	Y	Approx. Weight
206	1	MSG216NLPA♦●□Δ	2.4409	0.7087	1 11/32	0.3920	1.587	0.31	1/4-28	0.202	0.72
207	1 3/16	MSG219NLPA♦●□Δ	2.8346	0.7480	1 9/16	0.4540	1.847	0.34	5/16-24	0.227	1.03
208	1 7/16	MSG223NLPA♦●□Δ	3.1496	0.8661	1 21/32	0.4850	2.083	0.34	5/16-24	0.263	1.32
209	1 1/2	MSG224NLPA♦●□Δ	3.3465	0.8661	1 49/64	0.5320	2.281	0.36	5/16-24	0.256	1.62
210	1 11/16	MSG227NLPA♦●□Δ	3.5433	0.8661	1 13/16	0.5320	2.475	0.38	3/8-24	0.256	1.82
	1 3/4	MSG228NLPA♦●□Δ									1.74
211	1 15/16	MSG231NLPA♦●□Δ	3.9370	0.9843	1 13/16	0.5370	2.749	0.38	3/8-24	0.298	2.36
	2	MSG232NLPA♦●□Δ									
212	2 3/16	MSG235NLPA♦●□Δ	4.3307	1.0630	1 57/64	0.5780	3.012	0.38	3/8-24	0.330	2.97
	2 1/4	MSG236NLPA♦●□Δ									
214	2 7/16	MSG239NLPA●□Δ♦	4.9213	1.1545	2 15/64	0.8040	3.433	0.37	3/8-24	0.266	4.39
	2 1/2	MSG240NLPA●□Δ♦									4.25
215	2 11/16	MSG243NLPA●□Δ♦	5.1181	1.1835	2 17/64	0.8040	3.632	0.37	3/8-24	0.266	4.49
216	2 15/16	MSG247NLPA●□Δ♦	5.5118	1.2575	2 23/64	0.8630	3.920	0.37	3/8-24	0.282	5.53
	3	MSG248NLPA●□Δ♦									5.40
218	3 3/16	MSG251NLPA●□Δ♦	6.2992	1.3945	2 33/64	0.9620	4.396	0.37	3/8-24	0.313	8.23
	3 7/16	MSG255NLPA●□Δ♦									7.34
	3 1/2	MSG256NLPA●□Δ♦									7.15

Additional Notes

Please call 1-866-REXNORD for availability

Bearing O.D. tolerance for size code 206 thru 208, +.0000 in/-.0005 in *(+0.000 mm/ -0.013 mm)*: for size code 209 thru 215, +.0000 in/-.0006 in *(+0.000 mm/ -0.015 mm)*: for all other size codes, +.0000 in/-.0008 in *(+0.000 mm/-0.020 mm)*

Lip seals standard

♦ Available with E1 viton seals for all sizes

Available with free running style seals, add suffix ● FF, □ HFF or Δ MHFF for all size codes

For the Selection Guide, Load Ratings and Speed Limits, see the Link Belt 200 Series Medium Duty Ball Bearings Engineering section on pages 404 - 407.

Note: Dimensions subject to change. Certified dimensions of ordered material furnished on request.

Ball Bearings
Heavy Duty (300 Series) Units: Link-Belt

Contents

	Page
Features and Benefits	424
Nomenclature	425
Engineering	426
Dimensions	
Pillow Blocks	431
Flange Blocks	436
Cartridge Blocks	442
Take-up Blocks	445
Take-up Frames	447
Unmounted Replacement Bearings	448
SHURLOK Installation Tools	452

Industries Served

Aggregates
Air Handling
Forestry
Mining
Steel
Package Handling

300 Series Heavy Duty Ball Bearing Units

300 Series wide inner ring ball bearing units are designed for heavy duty applications requiring high capacity and/or high speed in a compact footprint. Manufactured from quality alloy bearing steel to precision tolerances, these bearings are used extensively on general industrial equipment, high speed fans and blowers and heavier duty power transmission and material handling equipment.

Super-finished Raceways
- Provides a cool running, quiet, high-speed and high-load capacity bearing

Spyglass Optical Strain Sensor (OSS)
- Provides instant feedback for optimal shaft grip
- Eliminates damage to the shaft and bearing because of improper tightness on the mounting.
- Quick installation: Simply tighten collar until the Spyglass shows a back-to-color pattern.

Seal Choice
- Choice of steel-clad molded type H clearance seal or type N double lip seal.

Wide Inner Ring
- Wide inner ring is for greater contact surface between shaft and bearing.

Prelubricated and Relubricatable

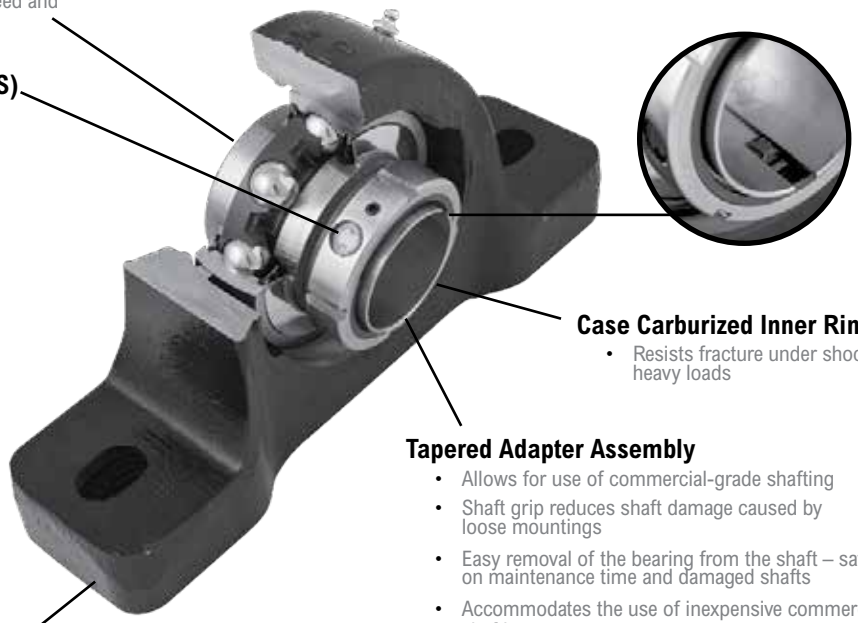

Positive Locking System
- Minimizes vibration; does not require mounting inspections

Case Carburized Inner Ring
- Resists fracture under shock and heavy loads

Tapered Adapter Assembly
- Allows for use of commercial-grade shafting
- Shaft grip reduces shaft damage caused by loose mountings
- Easy removal of the bearing from the shaft – saves on maintenance time and damaged shafts
- Accommodates the use of inexpensive commercial grade shafting

Rugged One-piece Housing

Heavy Duty Ball Bearings

Heavy series precision alignable ball bearings of deep groove construction with larger balls and thicker rings for high capacity and longer life. The extra inner ring width furnishes ultimate shaft and load support and concentricity for high speed precision application.

The spring locking collar design provides a secure grip of the wide inner ring bearing to the shaft. The two setscrews extend through the inner ring of the bearing and lock firmly into the shaft. Tightening the two setscrews produces elastic strain in the spring locking collar resulting in a continuous pressure on the shaft.

The eccentric cam locking collar design provides a secure grip of the wide inner ring bearing to the shaft and further tightens with bearing rotation. The adapter mount design provides better concentricity and shaft control, increasing service life. The adapter mount allows for easy installation/removal and enables the use of commercial grade shafting.

Furnished with anti-rotation pin in the outer ring to prevent the outer ring from spinning in the bearing housing.

One-piece Cast Iron Housings

Compact, one-piece cast iron housings provide strength with minimum size and weight, and excellent rigidity. All housings are designed with standard mounting dimensions and have finished mounting surfaces for proper installation stability. Pillow blocks have slotted bolt holes with ample space provided for drilling dowel pin holes and are also available with high backing dimensions. Flanged and flanged cartridge units have drilled mounting holes. Take-up units have machined slots for accurate adjustment.

Bearing Mounted Molded Rubber Seal

Type H Seal

These molded rubber seals effectively retain lubricant and protect against contamination. An external seal guard enhances protection against contamination and protects the molded rubber seal. A snap ring locates and retains the molded rubber seal in the outer ring to ensure proper operation. This is an excellent non-contact seal for grease lubrication.

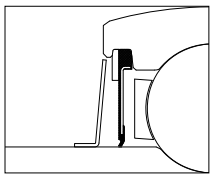

Type N Seal

These molded rubber double lip seals have two full land riding lips that effectively retain lubricant and protect against contamination. These seals ride on a precision ground surface of the bearing inner ring for smooth operation and tightness.

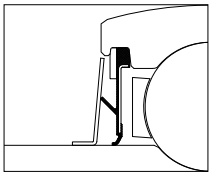

300 Series Nomenclature

P E -U 3 K 27 J N C 17H 4

Symbol	Description
C	Cartridge unit
F	Flanged unit, 4-bolt square
FC	Flanged cartridge unit, 4-bolt round
P	Pillow block, standard backing
PL	Pillow block, low backing
P2	Pillow block, high backing
T	Take-up, slotted guides
E	Expansion unit
A	Bearing sealed unit, SHURLOK adapter, relubricatable
U	Bearing sealed unit, spring locking, relubricatable
Y	Bearing sealed unit, eccentric cam locking collar, relubricatable
3	300 Series ball bearing designation
K	Adapter mounted
27	Shaft size in sixteenths of an inch
J	Steel retainers
None	Steel clad clearance seal
N	Molded double lip seals
C	Closed end unit
17H	Grease designation
4	Clearance, other than standard

Replacement Ball Bearing Nomenclature

UG 3 K 47 N L

AG	Wide inner ring, bearing seals, SHURLOK adapter
UG	Wide inner ring, bearing seals, spring locking collar
YG	Wide inner ring, bearing seals, eccentric cam locking collar
3	300 Series ball bearing designation
K	Adapter mounted
47	Shaft size in sixteenths of an inch
None	Steel clad clearance seal
N	Molded double lip seals
L1	Bearing without collar
L	Bearing with collar & setscrews

300 Series Ball Bearings Selection Guide

To select a bearing, determine the applied radial load, the applied thrust load, the desired Rating Life, and applicable operating conditions. The procedure shown here will aid in selecting a bearing to meet an L_{10} design life. The formulas for calculating life expectancy should be used to determine the Rating Life L_{10} for the bearing selected.

The selection procedures and rating formulas shown here are in agreement with The American Bearing Manufacturers Association Standards and ANSI/ABMA STD 9-1990. Ratings are based on fatigue life. The Rating Life L_{10} or fatigue life at 90% reliability is the usual basis for bearing selection. To assure a satisfactory bearing application, fitting practice, mounting, lubrication, sealing, static rating, housing strength, operating conditions and maintenance must be considered.

Steps for Selection

Step 1

Determine an appropriate L_{10} design life.

Type of service	Operating time, hours per year	Design life, years	L_{10} design life, hours
Light seasonal usage	500 to 750	3-5	3,000
Heavy seasonal usage	1,400 to 1,600	4-6	8,000
Industrial—8 hour shift	2,000	10	20,000
Industrial—16 hour shift	4,000	10	40,000
Industrial—Continuous	8,700	10	80,000 to 100,000

Step 2

Determine a required $\left(\frac{C}{P}\right)$ from Table 1.

Step 3

Calculate the required C and select a ball bearing.

a For radial load only:

$P = F_r$

required $C = \left(\frac{C}{P}\right)P$ using $\left(\frac{C}{P}\right)$ from Step 2

Select a ball bearing from Table 3 with a basic load rating C equal to or greater than the required C.

b For combined radial and thrust loads when $\frac{F_a}{F_r}$ is 0.19 or less:

$P = F_r$

required $C = \left(\frac{C}{P}\right)P$ using $\left(\frac{C}{P}\right)$ from Step 2

Select a ball bearing from Table 3 with a basic load rating C equal to or greater than the required C.

Step 3 (continued)

c For combined radial and thrust loads when $\frac{F_a}{F_r}$ is greater than 0.19, use the following trial method:

Maximum $P = .56F_r + 2.30F_a$

Maximum required $C = \left(\frac{C}{P}\right)P$ using $\left(\frac{C}{P}\right)$ from Step 2

Select a trial ball bearing with a basic load rating C from Table 3 approximately equal to the maximum required C.

With this trial bearing calculate: $\frac{F_a}{Nd^2}$

Determine X and Y from Table 2.

Calculate P for the trial bearing.

$P = XF_r + YF_a$

required $C = \left(\frac{C}{P}\right)P$ for the trial bearing using $\left(\frac{C}{P}\right)$ from Step 2

Consult Table 3, basic load rating. If a smaller bearing meets or nearly meets the required C, its life expectancy can be calculated.

Note: If the load P is greater than .25C, consult Rexnord Bearing Products.

Selection

Symbols for formulas:

C = basic load rating, pounds (or newtons)
C_o = static load rating, pounds (or newtons)
e = a reference value
F_a = thrust load, pounds (or newtons)
F_r = radial load, pounds (or newtons)
L_{10} = rating life, hours
n = speed, revolutions per minute
P = equivalent radial load, pounds (or newtons)
X = radial factor
Y = thrust factor

Table 1 • Relation of L_{10} life and speed to $\left(\frac{C}{P}\right)$

Bearing life, hours L_{10}	$\left(\frac{C}{P}\right)$ ratio								
	Speed, n								
	50	100	200	300	400	500	600	700	800
3000	2.08	2.62	3.30	3.77	4.15	4.47	4.75	5.01	5.23
4000	2.29	2.88	3.63	4.15	4.57	4.92	5.23	5.51	5.76
5000	2.46	3.10	3.91	4.47	4.92	5.30	5.64	5.93	6.20
6000	2.62	3.30	4.15	4.75	5.23	5.64	5.99	6.30	6.59
8000	2.88	3.63	4.57	5.23	5.76	6.20	6.59	6.94	7.25
10000	3.10	3.91	4.92	5.64	6.20	6.68	7.10	7.47	7.81
12000	3.30	4.15	5.23	5.99	6.59	7.10	7.54	7.94	8.30
14000	3.47	4.37	5.51	6.30	6.94	7.47	7.94	8.36	8.74
16000	3.63	4.57	5.76	6.59	7.25	7.81	8.30	8.74	9.14
18000	3.77	4.75	5.99	6.86	7.54	8.13	8.63	9.09	9.50
20000	3.91	4.92	6.20	7.10	7.81	8.42	8.94	9.41	9.84
25000	4.21	5.30	6.68	7.65	8.42	9.07	9.63	10.1	10.6
30000	4.47	5.64	7.10	8.13	8.94	9.63	10.2	10.8	11.3
35000	4.71	5.93	7.47	8.55	9.41	10.1	10.8	11.3	11.9
40000	4.92	6.20	7.81	8.94	9.84	10.6	11.3	11.9	12.4
45000	5.12	6.45	8.13	9.30	10.2	11.0	11.7	12.3	12.9
50000	5.30	6.68	8.42	9.63	10.6	11.4	12.1	12.8	13.4
60000	5.64	7.10	8.94	10.2	11.3	12.1	12.9	13.6	14.2
70000	5.93	7.47	9.41	10.8	11.9	12.8	13.6	14.3	14.9
80000	6.20	7.81	9.84	11.3	12.4	13.4	14.2	14.9	15.6
90000	6.45	8.13	10.2	11.7	12.9	13.9	14.8	15.5	16.2
100000	6.68	8.42	10.6	12.1	13.4	14.4	15.3	16.1	16.8
150000	7.65	9.63	12.1	13.9	15.3	16.5	17.5	18.4	19.3
200000	8.42	10.6	13.4	15.3	16.8	18.1	19.3	20.3	21.2
	Speed, n								
	900	1000	1200	1500	1800	2400	3600	6000	10000
3000	5.44	5.64	5.99	6.45	6.86	7.54	8.63	10.2	12.1
4000	5.99	6.20	6.59	7.10	7.54	8.30	9.50	11.3	13.4
5000	6.45	6.68	7.10	7.65	8.13	8.94	10.2	12.1	14.4
6000	6.86	7.10	7.54	8.13	8.63	9.50	10.9	12.9	15.3
8000	7.54	7.81	8.30	8.94	9.50	10.5	12.0	14.2	16.8
10000	8.13	8.42	8.94	9.63	10.2	11.3	12.9	15.3	18.1
12000	8.63	8.94	9.50	10.2	10.9	12.0	13.7	16.2	19.3
14000	9.09	9.41	10.0	10.8	11.4	12.6	14.4	17.1	20.3
16000	9.50	9.84	10.5	11.3	12.0	13.2	15.1	17.9	21.2
18000	9.88	10.2	10.9	11.7	12.4	13.7	15.7	18.6	22.0
20000	10.2	10.6	11.3	12.1	12.9	14.2	16.2	19.3	22.8
25000	11.0	11.4	12.1	13.1	13.9	15.3	17.5	20.7	24.6
30000	11.7	12.1	12.9	13.9	14.8	16.2	18.6	22.0	26.1
35000	12.3	12.8	13.6	14.6	15.5	17.1	19.6	23.2	27.5
40000	12.9	13.4	14.2	15.3	16.2	17.9	20.5	24.3	28.7
45000	13.4	13.9	14.8	15.9	16.9	18.6	21.3	25.2	29.9
50000	13.9	14.4	15.3	16.5	17.5	19.3	22.0	26.1	31.0
60000	14.8	15.3	16.2	17.5	18.6	20.5	23.4	27.8	32.9
70000	15.5	16.1	17.1	18.4	19.6	21.5	24.6	29.2	34.6
80000	16.2	16.8	17.9	19.3	20.5	22.5	25.8	30.5	36.2
90000	16.9	17.5	18.6	20.0	21.3	23.4	26.8	31.8	37.7
100000	17.5	18.1	19.3	20.7	22.0	24.3	27.8	32.9	39.0
150000	20.0	20.7	22.0	23.7	25.2	27.8	31.8	37.7	44.6
200000	22.0	22.8	24.3	26.1	27.8	30.5	35.0	41.4	49.1

Basic formula

$$\left(\frac{C}{P}\right) = \left(\frac{L_{10} \times n \times 60}{1{,}000{,}000}\right)^{1/3}$$

$$L_{10} = \frac{\left(\frac{C}{P}\right)^3 \times 1{,}000{,}000}{n \times 60}$$

Life Expectancy

To calculate the Rating Life L_{10} of any selected or trial bearing:

Step 1 Determine the equivalent radial load P.

a For radial load only:
$P = F_r$

b For combined radial and thrust load:
$P = XF_r + YF_a$ using X and Y from Table 2 below.

Step 2 Calculate the ratio of basic load rating C to the equivalent radial load.
$\left(\frac{C}{P}\right)$

Step 3 Approximate the bearing life from Table 1.

Table 2 • X and Y factors for ball bearings

$\frac{F_a}{Nd^2}$	e	$\frac{F_a}{F_r} \le e$		$\frac{F_a}{F_r} > e$	
		X	Y	X	Y
25	.19	1.0	0	.56	2.30
37.5	.21	1.0	0	.56	2.15
50	.22	1.0	0	.56	1.99
75	.24	1.0	0	.56	1.85
100	.26	1.0	0	.56	1.71
125	.27	1.0	0	.56	1.63
150	.28	1.0	0	.56	1.56
200	.30	1.0	0	.56	1.45
300	.34	1.0	0	.56	1.31
500	.38	1.0	0	.56	1.15
750	.42	1.0	0	.56	1.04
1000	.44	1.0	0	.56	1.00

For values between those in the table linear interpolation can be used.

Life Adjustment

The Rating Life, L_{10}, may be modified for some applications in accordance with the formula

$$L'_n = a_1 a_2 a_3 L_{10}$$

where L'_n = Adjusted life for (100-n) % reliablility,

a_1 = Life adjustment factor for reliability

a_2 = Life adjustment factor for material and processing

a_3 = Life adjustment factor for operating conditions.

For most normal applications, all factors will be taken as 1, and the Rating Life used as the selection basis or life estimate. In addition, as long as standard catalog bearings are used, *a2* will be normally set equal to one. The factor *a3* covers such things as lubrication, misalignment, and temperature. Some conditions that could yield *a3* significantly different than unity include speeds less than 20000 DN or greater than 200000 DN, temperatures below –40°F *(–40°C)* or above 275°F *(135°C)*. For other possible conditions, as well as additional information on life adjustment factors, consult Rexnord Bearing Products.

Table 3 • Load Ratings, Speed Limits and Ball Data

Size Code	C Basic load rating		Co Static load rating		Approximate speed limit RPM*		d Ball Diameter	N Number of balls	ND^2
	Pounds	Newtons	Pounds	Newtons	Std. Seals	N Seals	inches		
312	3614	*16050*	1770	*7890*	10950	…	3/8	7	0.98
316	4810	*21400*	2450	*10900*	9350	…	7/16	7	1.34
319	6320	*28150*	3530	*15700*	8300	6100	31/64	8	1.88
323	7490	*33300*	4290	*19100*	7550	5400	17/32	8	2.26
324	9126	*40600*	5390	*24000*	7200	…	19/32	8	2.82
328	11870	*52950*	7110	*31600*	6200	4300	11/16	8	3.78
331	13900	*61800*	8500	*37800*	5600	3900	3/4	8	4.50
335	16070	*71480*	1000	*11600*	4950	3550	13/16	8	5.28
339	18390	*81550*	11700	*51900*	4450	3250	7/8	8	6.12
344	23420	*104150*	15300	*68100*	3950	2800	1	8	8.00
347	26140	*113450*	17300	*77100*	3700	2650	1-1/16	8	9.03
351	28990	*122980*	19500	*86600*	3400	…	1-1/8	8	10.10
356	35070	*142700*	24100	*107200*	3100	…	1-1/4	8	12.50
363	45000	*173100*	31600	*140500*	2750	…	1-7/16	8	16.50

If the load P is greater than 25% of the C rating, consult Rexnord Bearing Division.

For U300 and Y300 Series reduce C Basic Load Rating by 23%

*Based on grease lubrication and moderate load.

Table 4 • Radial Load Ratings In Pounds At Various RPM For Appropriate L_{10} Life Hours

Bearing Size Number		Radial Load Ratings, Pounds																	
		Speed, RPM																	
Size Code	L_{10} Minimum life, hours	50	100	200	300	400	500	600	700	800	900	1000	1200	1500	1800	2000	2500	3000	3500
312	8000	1253	994	789	689	626	582	547	520	497	478	462	434	403	379	366	340	320	304
	20000	923	733	582	508	462	428	403	383	366	352	340	320	297	280	270	251	236	224
	40000	733	582	462	403	366	340	320	304	291	280	270	254	236	222	214	199	187	178
	100000	540	428	340	297	270	251	236	224	214	206	199	187	174	163	158	147	138	131
316	8000	1668	1324	1050	918	834	774	728	692	662	636	614	578	537	505	488	453	426	405
	20000	1229	975	774	676	614	570	537	510	488	469	453	426	395	372	359	334	314	298
	40000	975	774	614	537	488	453	426	405	387	372	359	338	314	295	285	265	249	237
	100000	719	570	453	395	359	334	314	298	285	274	265	249	231	218	210	195	184	174
319	8000	2195	1742	1383	1208	1097	1019	959	911	871	837	809	761	706	665	642	596	561	533
	20000	1617	1284	1019	890	809	751	706	671	642	617	596	561	520	490	473	439	413	392
	40000	1284	1019	809	706	642	596	561	533	509	490	473	445	413	389	375	348	328	311
	100000	946	751	596	520	473	439	413	392	375	361	348	328	304	286	277	257	242	229
323	8000	2596	2060	1635	1429	1298	1205	1134	1077	1030	991	956	900	835	786	759	705	663	630
	20000	1913	1518	1205	1053	956	888	835	794	759	730	705	663	616	579	559	519	489	464
	40000	1518	1205	956	835	759	705	663	630	602	579	559	526	489	460	444	412	388	368
	100000	1119	888	705	616	559	519	489	464	444	427	412	388	360	339	327	304	286	271
324	8000	3164	2511	1993	1741	1582	1469	1382	1313	1256	1207	1166	1097	1018	958	925	859	808	768
	20000	2331	1850	1469	1283	1166	1082	1018	967	925	889	859	808	750	706	682	633	595	566
	40000	1850	1469	1166	1018	925	859	808	768	734	706	682	641	595	560	541	502	473	449
	100000	1363	1082	859	750	682	633	595	566	541	520	502	473	439	413	399	370	348	331
328	8000	4128	3277	2601	2272	2064	1916	1803	1713	1638	1575	1521	1431	1329	1250	1207	1121	1055	1002
	20000	3042	2414	1916	1674	1521	1412	1329	1262	1207	1161	1121	1055	979	921	889	826	777	738
	40000	2414	1916	1521	1329	1207	1121	1055	1002	958	921	889	837	777	731	706	655	617	586
	100000	1779	1412	1121	979	889	826	777	738	706	679	655	617	572	539	520	483	454	432
331	8000	4822	3827	3038	2654	2411	2238	2106	2001	1914	1840	1777	1672	1552	1460	1410	1309	1232	1170
	20000	3553	2820	2238	1955	1777	1649	1552	1474	1410	1356	1309	1232	1144	1076	1039	964	908	862
	40000	2820	2238	1777	1552	1410	1309	1232	1170	1119	1076	1039	978	908	854	825	765	720	684
	100000	2078	1649	1309	1144	1039	964	908	862	825	793	765	720	669	629	608	564	531	504
335	8000	5588	4436	3521	3075	2794	2594	2441	2319	2218	2132	2059	1937	1799	1692	1634	1517	1428	1356
	20000	4118	3268	2594	2266	2059	1911	1799	1708	1634	1571	1517	1428	1325	1247	1204	1118	1052	999
	40000	3268	2594	2059	1799	1634	1517	1428	1356	1297	1247	1204	1133	1052	990	956	887	835	793
	100000	2408	1911	1517	1325	1204	1118	1052	999	956	919	887	835	775	729	704	654	615	584
339	8000	6355	5044	4003	3497	3177	2950	2776	2637	2522	2425	2341	2203	2045	1925	1858	1725	1623	
	20000	4682	3716	2950	2577	2341	2173	2045	1943	1858	1787	1725	1623	1507	1418	1369	1271	1196	
	40000	3716	2950	2341	2045	1858	1725	1623	1542	1475	1418	1369	1288	1196	1125	1087	1009	949	
	100000	2738	2173	1725	1507	1369	1271	1196	1136	1087	1045	1009	949	881	829	801	743	699	
344	8000	8112	6439	5110	4464	4056	3765	3543	3366	3219	3095	2989	2812	2611	2457	2372	2202		
	20000	5977	4744	3765	3289	2989	2774	2611	2480	2372	2281	2202	2072	1924	1810	1748	1622		
	40000	4744	3765	2989	2611	2372	2202	2072	1968	1883	1810	1748	1645	1527	1437	1387	1288		
	100000	3495	2774	2202	1924	1748	1622	1527	1450	1387	1334	1288	1212	1125	1059	1022	949		
347	8000	8924	7083	5621	4911	4462	4142	3898	3703	3541	3405	3287	3094	2872	2703	2609	2422		
	20000	6575	5219	4142	3618	3287	3052	2872	2728	2609	2509	2422	2279	2116	1991	1923	1785		
	40000	5219	4142	3287	2872	2609	2422	2279	2165	2071	1991	1923	1809	1679	1580	1526	1417		
	100000	3845	3052	2422	2116	1923	1785	1679	1595	1526	1467	1417	1333	1237	1164	1124	1044		
351	8000	9509	7548	5991	5233	4755	4414	4154	3946	3774	3629	3503	3297	3060	2880	2781	2581		
	20000	7007	5561	4414	3856	3503	3252	3060	2907	2781	2674	2581	2429	2255	2122	2049	1902		
	40000	5561	4414	3503	3060	2781	2581	2429	2307	2207	2122	2049	1928	1790	1684	1626	1510		
	100000	4097	3252	2581	2255	2049	1902	1790	1700	1626	1563	1510	1421	1319	1241	1198	1112		
356	8000	11087	8800	6984	6101	5543	5146	4843	4600	4400	4230	4084	3844	3568	3358	3242			
	20000	8169	6484	5146	4495	4084	3792	3568	3389	3242	3117	3009	2832	2629	2474	2389			
	40000	6484	5146	4084	3568	3242	3009	2832	2690	2573	2474	2389	2248	2087	1964	1896			
	100000	4777	3792	3009	2629	2389	2217	2087	1982	1896	1823	1760	1656	1537	1447	1397			
363	8000	13521	10731	8517	7441	6760	6276	5906	5610	5366	5159	4981	4687	4351	4095	3953			
	20000	9962	7907	6276	5482	4981	4624	4351	4133	3953	3801	3670	3454	3206	3017	2913			
	40000	7907	6276	4981	4351	3953	3670	3454	3281	3138	3017	2913	2741	2545	2395	2312			
	100000	5826	4624	3670	3206	2913	2704	2545	2417	2312	2223	2146	2020	1875	1764	1703			

If the load P is greater than 25% of the C rating, consult Rexnord Bearing Division.

For U300 and Y300 Series reduce C Basic Load Rating by 23%

PA300, PEA300

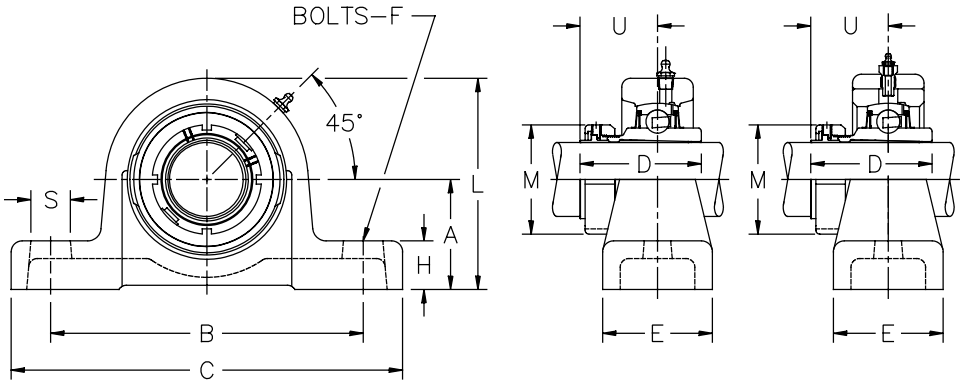

Product Features

- Spyglass Optical Strain Sensor (OSS) Technology
- Positive locking system
- Tapered adapter sleeve
- Corrosion-resistant powder coating
- Cast iron housing
- Fixed or Expansion - Up to 3/8 in expansion
- Alignable & relubricatable
- See Features and Benefits for additional info on page 424.

Bearing Dimensions

Size Code	Shaft Diameter	Expansion		Fixed		A Base to Centerline Height	B Distance Between Bolt Holes	C	D	E	F Bolts	H	M	S	U	Total Axial Expansion	Approx. Weight
		Part Number	L	Part Number	L												
319	1 3/16	PEA319	4 1/4	PA319	4 1/16	2 1/8	6 7/16	8 1/4	2 3/4	2 1/4	1/2	15/16	2 5/32	1 1/16	1.98	3/16	5.50
323	1 7/16	PEA323	4 11/16	PA323	4 1/2	2 3/8	7 3/8	9 1/4	2 47/64	2 3/8	5/8	1	2 3/8	1 1/8	1.91	3/16	7.77
328	1 11/16	PEA327	5 5/8	PA327	5 1/2	2 7/8	8 1/4	10 1/4	3 1/8	3	5/8	1 5/16	2 41/64	1 1/8	2.22	3/16	13.35
331	1 15/16	PEA331	6 7/32	PA331	6	3 1/8	8 7/8	11 1/8	3 7/32	3 1/8	5/8	1 3/8	2 55/64	1 1/8	2.13	1/4	16.00
335	2 3/16	PEA335	6 13/16	PA335	6 5/8	3 1/2	10 1/4	12 5/8	3 23/64	3 3/8	3/4	1 1/2	3 15/64	1 1/4	2.14	9/32	24.00
339	2 7/16	PEA339	7 3/16	PA339	7 1/8	3 5/8	11 1/4	13 3/4	3 27/32	3 1/2	3/4	1 5/8	3 19/32	1 3/8	2.39	9/32	27.00
344	2 11/16	PEA343	7 15/16	PA343	7 3/4	4	11 13/16	14 5/8	4 1/4	3 3/4	7/8	1 5/8	4 3/32	1 5/8	2.69	7/32	36.00
	2 3/4	PEA344		PA344													
347	2 15/16	PEA347	8 3/8	PA347	8 3/8	4 1/4	12	15 1/8	4 17/32	4	7/8	1 3/4	4 3/32	1 5/8	2.80	7/32	44.00
351	3 3/16	PEA351	9	PA351	9	4 9/16	12 1/4	15 3/8	5 1/2	4 5/16	7/8	1 15/16	4 61/64	1 5/8	3.69	11/32	55.00
356	3 7/16	PEA355	10 1/16	PA355	9 7/8	5 1/8	12 7/8	16 1/8	5 23/64	5	1	2 1/4	4 61/64	1 5/8	3.33	11/32	68.00
363	3 15/16	PEA363	11 1/16	PA363	11 1/16	5 11/16	14 1/2	17 5/16	5 29/32	5	1	2 9/16	5 43/64	1 1/2	3.97	11/32	98.00

Additional Notes

- Please call 1-866-REXNORD for availability
- Lubrication fitting tap size: for expansion units with shaft sizes 2 7/16 in and below, 1/4 in-28 UNF: for other expansion units and all fixed units, 1/8 in PT
- Base to centerline tolerance, +0.000 in/-0.010 in *(+0.00 mm/-0.25 mm)*
- 1 3/16 in thru 2 15/16 in shaft sizes also available with dual contact lip seals, add suffix N
- For the Selection Guide, Load Ratings and Speed Limits, see the Link-Belt 300 Series Heavy Duty Ball Bearings Engineering section on pages 426 - 429.
- Note: Dimensions subject to change. Certified dimensions of ordered material furnished on request.

PU3K00, PEU3K00

Photo Shows a 2-Bolt Ball Bearing Pillow Block Unit

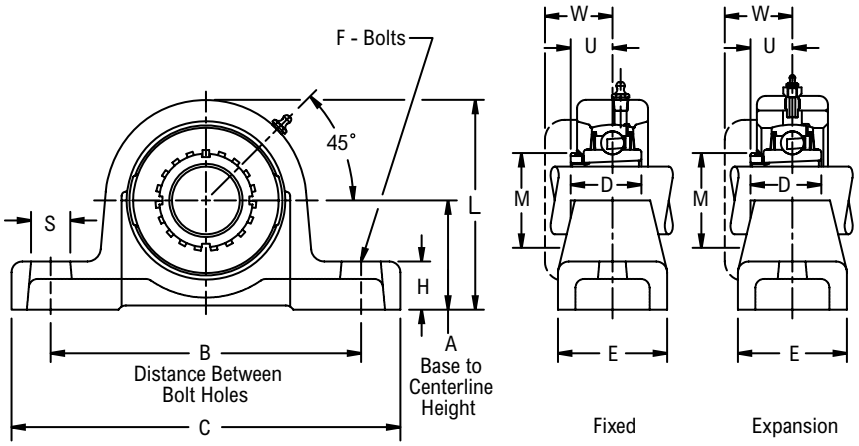

Product Features

- Corrosion-resistant powder coating
- Cast iron housing
- Enhanced life mounting style
- Fixed or Expansion - Up to 11/32 in expansion
- Alignable & relubricatable
- See Features and Benefits for additional info on page 424.

Bearing Dimensions

Size Code	Shaft Diameter	Expansion		Fixed		A Base to Centerline Height	B Distance Between Bolt Holes	C	D	E	F Bolts	H	M	S	U	W	Total Axial Expansion	Approx. Weight
		Part Number	L	Part Number	L													
331	1 11/16	PEU3K27	6 7/32	PU3K27	6	3 1/8	8 7/8	11 1/8	2 17/32	3 1/8	5/8	1 3/8	2 11/16	1 1/8	1 35/64	1 27/32	1/4	17.00
335	1 15/16	PEU3K31	6 13/16	PU3K31	6 5/8	3 1/2	10 1/4	12 5/8	2 19/32	3 3/8	3/4	1 1/2	2 31/32	1 1/4	1 43/64	1 31/32	9/32	23.00
344	2 3/16	PEU3K35	7 15/16	PU3K35	7 3/4	4	11 13/16	14 5/8	3 1/32	3 3/4	7/8	1 5/8	3 3/8	1 5/8	1 27/32	2 3/16	7/32	35.00
347	2 7/16	PEU3K39	8 3/8	PU3K39	8 3/8	4 1/4	12	15 1/8	3 3/16	4	7/8	1 3/4	3 7/8	1 5/8	1 15/16	2 7/16	7/32	41.00
351	2 11/16	PEU3K43	9	PU3K43	9	4 9/16	12 1/4	15 3/8	3 5/16	4 5/16	7/8	1 15/16	4 5/32	1 5/8	2 1/4	2 5/8	11/32	50.00
356	2 15/16	PEU3K47	10 1/16	PU3K47	9 7/8	5 1/8	12 7/8	16 1/8	3 17/32	5	1	2 1/4	4 13/32	1 5/8	2 3/8	2 3/4	11/32	60.00
363	3 7/16	PEU3K55	11 1/16	PU3K55	11 1/16	5 11/16	14 1/2	17 5/16	3 31/32	5	1	2 9/16	5 3/16	1 1/2	2 29/32	3 9/32	11/32	82.00

Additional Notes

- Please call 1-866-REXNORD for availability
- Lubrication fitting tap size: for expansion units with shaft sizes 1 15/16 in and below, 1/4 in-28 UNF: for other expansion units and all fixed units, 1/8 in PT
- Base to centerline tolerance, +.000 in/-.010 in *(+0.00 mm/-0.25 mm)*
- 1 11/16 in thru 2 7/16 in shaft sizes also available with dual contact lip seals, add suffix N
- For the Selection Guide, Load Ratings and Speed Limits, see the Link-Belt 300 Series Heavy Duty Ball Bearings Engineering section on pages 426 - 429.

Note: Dimensions subject to change. Certified dimensions of ordered material furnished on request.

PU300, PEU300

Photo Shows a 2-Bolt Ball Bearing Pillow Block Unit

Product Features

- Corrosion-resistant powder coating
- Cast iron housing
- Spring locking setscrew mount
- Fixed or Expansion - Up to 11/32 in expansion
- Alignable & relubricatable
- See Features and Benefits for additional info on page 424.

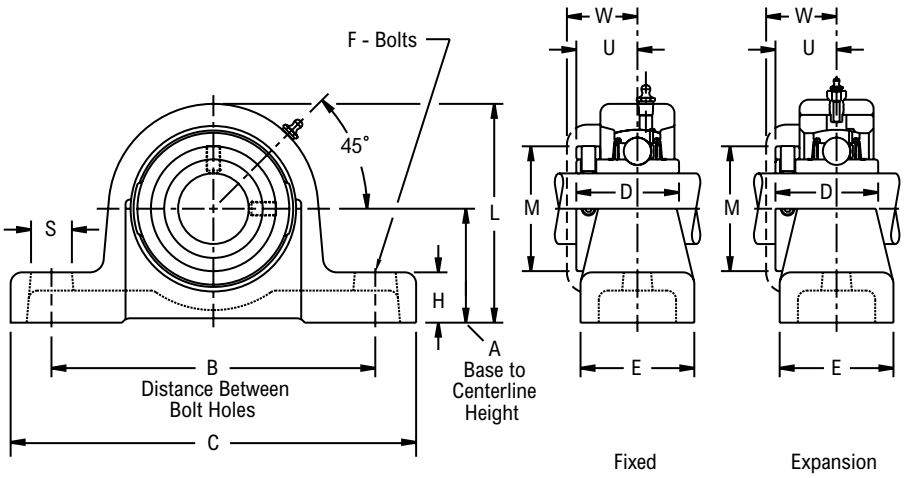

Bearing Dimensions

Size Code	Shaft Diameter	Expansion Part Number	Expansion L	Fixed Part Number	Fixed L	A Base to Centerline Height	B Distance Between Bolt Holes	C	D	E	F Bolts	H	M	S	U	W	Total Axial Expansion	Approx. Weight
312	3/4	PEU312	3 3/16	PU312	3 1/16	1 5/8	5	6 1/2	1 15/32	1 3/4	1/2	13/16	1 5/8	7/8	27/32	1 3/64	3/16	3.00
316	7/8	PEU314	3 23/32	PU314	3 9/16	1 7/8	5 1/2	7	1 43/64	2	1/2	7/8	2	7/8	63/64	1 15/64	3/16	4.00
	15/16	PEU315		PU315														
	1	PEU316		PU316														
319	1 1/8	PEU318	4 1/4	PU318	4 1/16	2 1/8	6 7/16	8 1/4	1 59/64	2 1/4	1/2	15/16	2 5/16	1 1/16	1 9/64	1 13/32	3/16	5.90
	1 3/16	PEU319		PU319														
323	1 1/4	PEU320	4 11/16	PU320	4 1/2	2 3/8	7 3/8	9 1/4	2 3/32	2 3/8	5/8	1	2 9/16	1 1/8	1 1/4	1 1/2	3/16	7.50
	1 3/8	PEU322		PU322														
	1 7/16	PEU323		PU323														
324	1 1/2	PEU324	5 7/32	PU324	5	2 5/8	8	10 1/8	2 5/16	2 5/8	5/8	1 1/4	3 1/16	1 1/4	1 25/64	1 39/64	3/16	11.50
328	1 5/8	PEU326	5 5/8	PU326	5 1/2	2 7/8	8 1/4	10 1/4	2 19/32	3	5/8	1 5/16	3 1/4	1 1/8	1 35/64	1 27/32	3/16	13.00
	1 11/16	PEU327		PU327														
	1 3/4	PEU328		PU328														
331	1 15/16	PEU331	6 7/32	PU331	6	3 1/8	8 7/8	11 1/8	2 13/16	3 1/8	5/8	1 3/8	3 7/16	1 1/8	1 43/64	1 31/32	1/4	17.20
335	2	PEU332	6 13/16	PU332	6 5/8	3 1/2	10 1/4	12 5/8	3 1/16	3 3/8	3/4	1 1/2	3 15/16	1 1/4	1 27/32	2 3/16	9/32	21.50
	2 1/8	PEU334		PU334														
	2 3/16	PEU335		PU335														
339	2 1/4	PEU336	7 3/16	PU336	7 1/8	3 5/8	11 1/4	13 3/4	3 5/16	3 1/2	3/4	1 5/8	4 3/16	1 3/8	1 15/16	2 7/16	9/32	27.50
	2 7/16	PEU339		PU339														
344	2 11/16	PEU343	7 15/16	PU343	7 3/4	4	11 13/16	14 5/8	3 13/16	3 3/4	7/8	1 5/8	4 3/4	1 5/8	2 1/4	2 5/8	7/32	39.00
	2 3/4	PEU344		PU344														
347	2 15/16	PEU347	8 3/8	PU347	8 3/8	4 1/4	12	15 1/8	4 3/32	4	7/8	1 3/4	4 15/16	1 5/8	2 3/8	2 3/4	7/32	44.50
351	3	PEU348	9	PU348	9	4 9/16	12 1/4	15 3/8	4 13/32	4 5/16	7/8	1 15/16	5 11/16	1 5/8	2 19/32	3	11/32	53.00
	3 3/16	PEU351		PU351														
356	3 7/16	PEU355	10 1/16	PU355	9 7/8	5 1/8	12 7/8	16 1/8	4 15/16	5	1	2 1/4	6	1 5/8	2 29/32	3 9/32	11/32	70.00
	3 1/2	PEU356		PU356														
363	3 15/16	PEU363	11 1/16	PU363	11 1/16	5 11/16	14 1/2	17 5/16	5 9/16	5	1	2 9/16	7	1 1/2	3 9/32	3 11/16	11/32	98.00

Additional Notes

- Please call 1-866-REXNORD for availability
- Lubrication fitting tap size: for expansion units with shaft sizes 2 7/16 in and below, 1/4 in-28 UNF: for other expansion units and all fixed units, 1/8 in PT
- Base to centerline tolerance, +.000 in/-.010 in *(+0.00 mm/-0.25 mm)*
- 1 1/8 in thru 1 7/16 in & 1 5/8 in thru 2 15/16 in shaft sizes also available with dual contact lip seals, add suffix N
- For the Selection Guide, Load Ratings and Speed Limits, see the Link-Belt 300 Series Heavy Duty Ball Bearings Engineering section on pages 426 - 429.

Note: Dimensions subject to change. Certified dimensions of ordered material furnished on request.

P2U300

Photo Shows a 2-Bolt Ball Bearing Pillow Block Unit

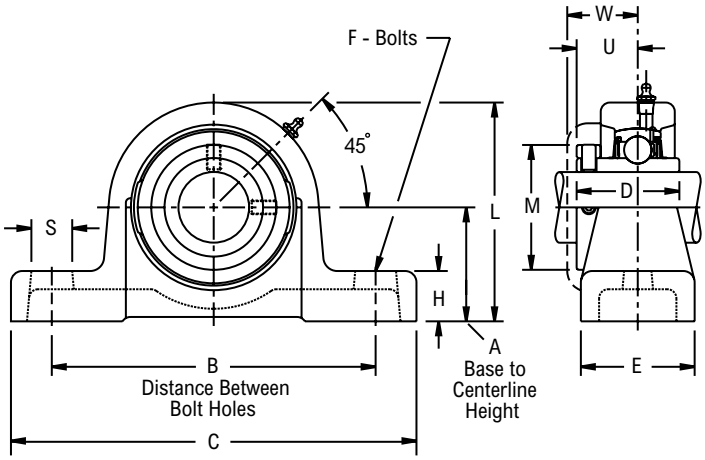

Product Features

- Corrosion-resistant powder coating
- Cast iron housing
- Spring locking setscrew mount
- Alignable & relubricatable
- High base to center height
- See Features and Benefits for additional info on page 424.

Bearing Dimensions

Size Code	Shaft Diameter	Part Number	A Base to Centerline Height	B Distance Between Bolt Holes	C	D	E	F Bolts	H	L	M	S	U	W	Approx. Weight
316	7/8	P2U314	2	5 1/2	7	1 43/64	2	1/2	7/8	3 11/16	2	7/8	63/64	1 15/64	4.20
	15/16	P2U315													
	1	P2U316													
319	1 1/8	P2U318	2 3/8	6 5/8	8 1/4	1 59/64	2 3/8	1/2	7/8	4 5/16	2 5/16	1	1 9/64	1 13/32	6.50
	1 3/16	P2U319													
323	1 1/4	P2U320	2 3/4	8 1/4	10 1/8	2 3/32	2 3/4	5/8	15/16	4 7/8	2 9/16	1 1/8	1 1/4	1 1/2	8.90
	1 3/8	P2U322													
	1 7/16	P2U323													
328	1 5/8	P2U326	3 1/8	9	11	2 19/32	3	5/8	1 3/16	5 3/4	3 1/4	1 1/8	1 35/64	1 27/32	14.00
	1 11/16	P2U327													
	1 3/4	P2U328													
335	2	P2U332	3 3/4	10 1/4	12 5/8	3 1/16	3 3/8	3/4	1 7/16	6 7/8	3 15/16	1 3/8	1 27/32	2 3/16	22.90
	2 1/8	P2U334													
	2 3/16	P2U335													
339	2 1/4	P2U336	4 1/8	11 1/4	13 3/4	3 5/16	4	3/4	1 1/2	7 1/2	4 3/16	1 3/8	1 15/16	2 7/16	31.10
	2 7/16	P2U339													
344	2 11/16	P2U343	4 9/16	12	14 13/16	3 13/16	4 3/8	7/8	1 3/4	8 7/16	4 3/4	1 3/8	2 1/4	2 5/8	44.00
	2 3/4	P2U344													
347	2 15/16	P2U347	4 9/16	12 3/8	15 3/8	4 3/32	4 3/8	7/8	1 7/8	8 11/16	4 15/16	1 3/8	2 3/8	2 3/4	47.20

Additional Notes

- Please call 1-866-REXNORD for availability
- Lubrication fitting tap size, 1/8 in PT
- Base to centerline tolerance, +.000 in/-.010 in *(+0.00 mm/-0.25 mm)*
- 1 1/8 in thru 1 7/16 in & 1 5/8 in thru 2 15/16 in shaft sizes also available with dual contact lip seals, add suffix N
- For the Selection Guide, Load Ratings and Speed Limits, see the Link-Belt 300 Series Heavy Duty Ball Bearings Engineering section on pages 426 - 429.
- Note: Dimensions subject to change. Certified dimensions of ordered material furnished on request.

PLY300

Photo Shows a 2-Bolt Ball Bearing Pillow Block Unit

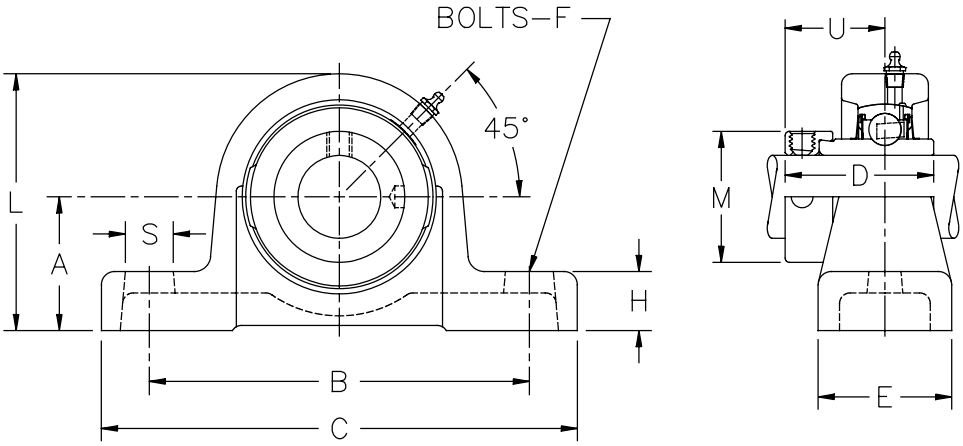

Product Features

- Corrosion-resistant powder coating
- Cast iron housing
- Eccentric cam locking device
- Alignable & relubricatable
- Low base to center height
- See Features and Benefits for additional info on page 424.

Bearing Dimensions

Size Code	Shaft Diameter	Part Number	A Base to Centerline Height	B Distance Between Bolt Holes	C	D	E	F Bolts	H	L	M	S	U	Approx. Weight
319	1 3/16	PLY319N	1 7/8	5 3/8	6 13/16	2 1/32	1 15/16	1/2	7/8	3 11/16	1 15/16	3/4	1 1/4	4.60
323	1 7/16	PLY323N	2 1/8	6	7 9/16	2 5/32	2 1/8	1/2	15/16	4 3/32	2 3/16	3/4	1 5/16	5.90
328	1 11/16	PLY327N	2 5/8	7 1/2	9 7/16	2 9/16	2 5/8	5/8	1 3/16	5 1/8	2 3/4	1	1 33/64	11.30
331	1 15/16	PLY331N	2 13/16	8 1/4	10 7/16	2 25/32	2 7/8	5/8	1 5/16	5 9/16	3	1	1 41/64	15.00
335	2 3/16	PLY335N	3 1/16	9	11 5/16	2 15/16	3 1/8	3/4	1 7/16	6 1/32	3 1/4	1 1/8	1 23/32	18.50
339	2 7/16	PLY339N	3 5/16	9 3/4	12 5/16	3 5/32	3 5/16	3/4	1 1/2	6 17/32	3 1/2	1 1/8	1 25/32	23.20
344	2 11/16	PLY343N	3 13/16	11 1/4	14 3/16	3 9/16	3 13/16	7/8	1 3/4	7 9/16	4	1 5/16	2	36.10
347	2 15/16	PLY347N	4 1/8	12	15 1/8	3 15/16	4 1/16	7/8	1 7/8	8 1/8	4 7/16	1 5/16	2 7/32	43.40

Additional Notes

- Please call 1-866-REXNORD for availability
- Lubrication fitting tap size, 1/8 in PT
- Base to centerline tolerance, +.000 in/-.010 in *(+0.00 mm/-0.25 mm)*
- N dual contact lip seals standard
- For the Selection Guide, Load Ratings and Speed Limits, see the Link-Belt 300 Series Heavy Duty Ball Bearings Engineering section on pages 426 - 429.
- Note: Dimensions subject to change. Certified dimensions of ordered material furnished on request.

FA300, FEA300

Photo Shows a 4-Bolt Ball Bearing Flanged Unit

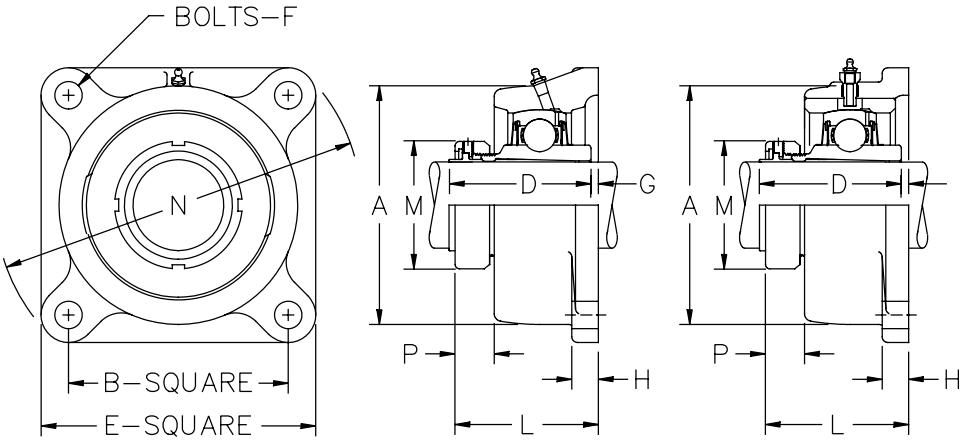

Product Features

- Spyglass Optical Strain Sensor (OSS) Technology
- Positive locking system
- Tapered adapter sleeve
- Corrosion-resistant powder coating
- Cast iron housing
- Fixed or Expansion - up to 3/8 in. Expansion
- Alignable & relubricatable
- See Features and Benefits for additional info on page 424.

Bearing Dimensions

Size Code	Shaft Diameter	Expansion		Fixed		B Distance Between Bolt Holes	L Mounting Surface to Collar Face	D	E	F Bolts	G	H	M	N	P	Total Axial Expansion	Approx. Weight
		Part Number	A	Part Number	A												
319	1 3/16	FEA319	4 1/8	FA319	3 5/8	3 13/16	2 7/8	2 3/4	4 15/46	1/2	1/8	5/8	2 5/32	6 17/32	1 7/32	3/16	5.00 lb
323	1 7/16	FEA323	4 15/32	FA323	4 1/16	4	2 29/32	2 47/64	5 1/8	5/8	5/32	5/8	2 3/8	6 25/32	1 3/32	3/16	6.20 lb
328	1 11/16	FEA327	5 1/2	FA327	5	4 7/8	3 25/64	3 1/8	6 1/4	5/8	1/4	11/16	2 41/64	8 9/32	1 9/32	3/16	10.40 lb
331	1 15/16	FEA331	5 15/16	FA331	5 1/2	5 1/8	3 27/64	3 7/32	6 1/2	5/8	5/32	11/16	2 55/64	8 5/8	1 7/64	1/4	12.50 lb
335	2 3/16	FEA335	6 3/8	FA335	6	5 3/4	3 33/64	3 23/64	7 5/16	3/4	5/32	3/4	3 15/64	9 11/16	61/64	9/32	17.00 lb
339	2 7/16	FEA339	6 13/16	FA339	6 3/8	6	3 59/64	3 27/32	7 5/8	3/4	5/32	3/4	3 19/32	10 1/8	1 1/8	9/32	19.00 lb
344	2 11/16	FEA343	7 3/4	FA343	7 5/16	7	4 13/32	4 1/4	8 7/8	7/8	5/32	7/8	4 3/32	11 25/32	1 3/16	7/32	30.00 lb
	2 3/4	FEA344		FA344													
347	2 15/16	FEA347	8 1/4	FA347	7 7/8	7 1/4	4 47/64	4 17/32	9 1/16	7/8	7/32	7/8	4 3/32	12 1/16	1 19/64	7/32	34.00 lb
356	3 7/16	FEA355	9 7/8	FA355	9 1/4	8 1/2	5 37/64	5 23/64	11	1	7/32	1 1/4	4 61/64	14 17/32	1 27/64	11/32	50.00 lb
363	3 15/16	FEA363	10 15/16	FA363	10 3/8	9 1/2	6 1/8	5 29/32	12 1/8	1	7/32	1 3/8	5 43/64	16 1/16	1 27/64	11/32	82.00 lb

Additional Notes

- Please call 1-866-REXNORD for availability
- Lubrication fitting tap size: for expansion units with shaft sizes 2 7/16 in and below, 1/4 in-28 UNF: for other expansion units and all fixed units, 1/8 in PT
- 1 1/8 in thru 1 7/16 in & 1 5/8 in thru 2 15/16 shaft sizes also available with dual contact lip seals, add suffix N
- For the Selection Guide, Load Ratings and Speed Limits, see the Link-Belt 300 Series Heavy Duty Ball Bearings Engineering section on pages 426 - 429.
- Note: Dimensions subject to change. Certified dimensions of ordered material furnished on request.

FU3K00, FEU3K00

Photo Shows a 4-Bolt Ball Bearing Flanged Unit

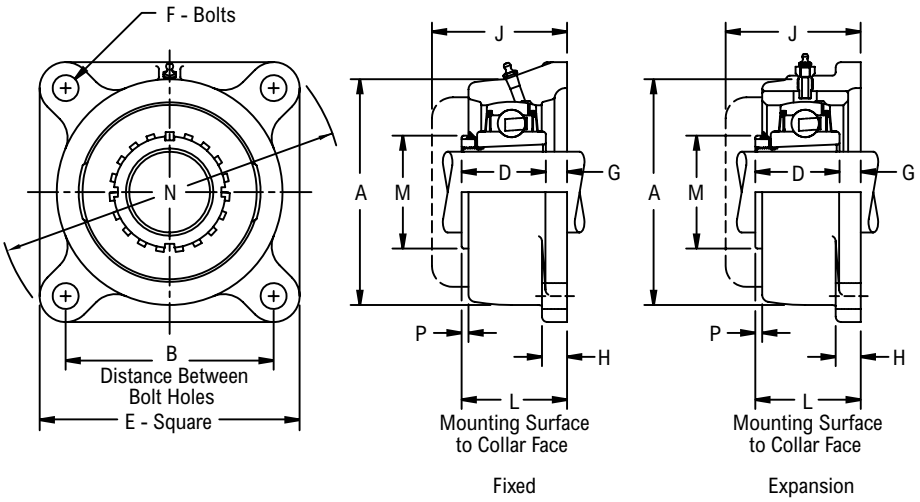

Product Features

- Corrosion-resistant powder coating
- Cast iron housing
- Enhanced life mounting style
- Fixed or Expansion - Up to 11/32 in expansion
- Alignable & relubricatable
- See Features and Benefits for additional info on page 424.

Bearing Dimensions

Size Code	Shaft Diameter	Expansion		Fixed		B Distance Between Bolt Holes	L Mounting Surface to Collar Face	D	E	F Bolts	G	H	J	M	N	P	Total Axial Expansion	Approx. Weight
		Part Number	A	Part Number	A													
331	1 11/16	FEU3K27	5 15/16	FU3K27	5 1/2	5 1/8	2 27/32	2 17/32	6 1/2	5/8	21/64	11/16	3 17/64	2 11/16	8 5/8	17/32	1/4	12.00
335	1 15/16	FEU3K31	6 3/8	FU3K31	6	5 3/4	2 61/64	2 19/32	7 5/16	3/4	23/64	3/4	3 9/16	2 31/32	9 11/16	25/64	9/32	17.60
344	2 3/16	FEU3K35	7 3/4	FU3K35	7 5/16	7	3 35/64	3 1/32	8 7/8	7/8	17/32	7/8	4 11/32	3 3/8	11 25/32	21/64	7/32	26.90
347	2 7/16	FEU3K39	8 1/4	FU3K39	7 7/8	7 1/4	3 7/8	3 3/16	9 1/16	7/8	11/16	7/8	4 11/16	3 7/8	12 1/16	7/32	7/32	30.80
356	2 15/16	FEU3K47	9 7/8	FU3K47	9 1/4	8 1/2	4 3/8	3 17/32	11	1	27/32	1 1/4	5 17/32	4 13/32	14 17/32	7/32	11/32	49.70
363	3 7/16	FEU3K55	10 15/16	FU3K55	10 3/8	9 1/2	4 59/64	3 31/32	12 1/8	1 1/8	15/16	1 3/8	6 3/16	5 3/16	16 1/16	15/64	11/32	65.30

Additional Notes

- Please call 1-866-REXNORD for availability
- Lubrication fitting tap size: for expansion units with shaft sizes 1 15/16 in and below, 1/4 in-28 UNF: for other expansion units and all fixed units, 1/8 in PT
- 1 11/16 in thru 2 7/16 in shaft sizes also available with dual contact lip seals, add suffix N
- For the Selection Guide, Load Ratings and Speed Limits, see the Link-Belt 300 Series Heavy Duty Ball Bearings Engineering section on pages 426 - 429.
- Note: Dimensions subject to change. Certified dimensions of ordered material furnished on request.

FU300, FEU300

Photo Shows a 4-Bolt Ball Bearing Flanged Unit

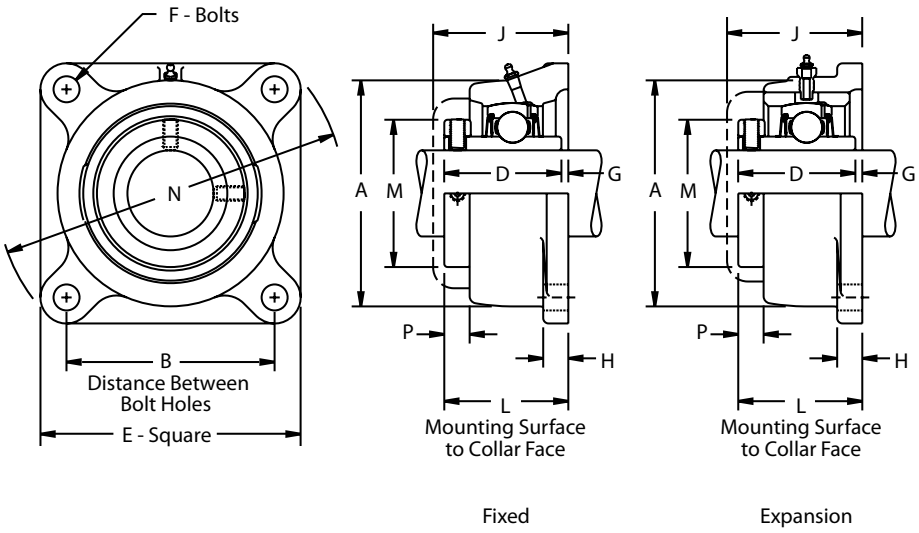

Product Features

- Corrosion-resistant powder coating
- Cast iron housing
- Spring locking setscrew mount
- Fixed or Expansion - Up to 11/32 in expansion
- Alignable & relubricatable
- See Features and Benefits for additional info on page 424.

Bearing Dimensions

Size Code	Shaft Diameter	Expansion Part Number	Expansion A	Fixed Part Number	Fixed A	B Distance Between Bolt Holes	L Mounting Surface to Collar Face	D	E	F Bolts	G	H	J	M	N	P	Total Axial Expansion	Approx. Weight
316	7/8	FEU314	3 11/16	FU314	3 1/4	3 1/2	1 51/64	1 43/64	4 5/8	1/2	1/8	9/16	2 3/64	2	6 1/16	19/64	3/16	4.00
	15/16	FEU315		FU315														
	1	FEU316		FU316														
319	1 1/8	FEU318	4 1/8	FU318	3 5/8	3 13/16	2 3/64	1 59/64	4 15/16	1/2	1/8	5/8	2 5/16	2 5/16	6 17/32	25/64	3/16	4.70
	1 3/16	FEU319		FU319														
323	1 1/4	FEU320	4 15/32	FU320	4 1/16	4	2 1/4	2 3/32	5 1/8	1/2	5/32	5/8	2 1/2	2 9/16	6 25/32	7/16	9/32	6.00
	1 3/8	FEU322		FU322														
	1 7/16	FEU323		FU323														
324	1 1/2	FEU324	5	FU324	4 9/16	4 5/8	2 15/32	2 5/16	6	5/8	5/32	5/8	2 11/16	3 1/16	7 29/32	1/2	9/32	8.50
328	1 5/8	FEU326	5 1/2	FU326	5	4 7/8	2 3/4	2 19/32	6 1/4	5/8	5/32	11/16	3 3/64	3 1/4	8 9/32	35/64	3/16	10.20
	1 11/16	FEU327		FU327														
	1 3/4	FEU328		FU328														
331	1 15/16	FEU331	5 15/16	FU331	5 1/2	5 1/8	2 31/32	2 13/16	6 1/2	5/8	5/32	11/16	3 17/64	3 7/16	8 5/8	37/64	1/4	12.20
335	2	FEU332	6 3/8	FU332	6	5 3/4	3 7/32	3 1/16	7 5/16	3/4	5/32	3/4	3 9/16	3 15/16	9 11/16	21/32	9/32	16.50
	2 1/8	FEU334		FU334														
	2 3/16	FEU335		FU335														
339	2 1/4	FEU336	6 13/16	FU336	6 3/8	6	3 15/32	3 5/16	7 5/8	3/4	5/32	3/4	3 31/32	4 3/16	10 1/8	21/32	9/32	19.20
	2 7/16	FEU339		FU339														
344	2 11/16	FEU343	7 3/4	FU343	7 5/16	7	3 31/32	3 13/16	8 7/8	7/8	5/32	7/8	4 11/32	4 3/4	11 25/32	3/4	7/32	30.00
	2 3/4	FEU344		FU344														
347	2 15/16	FEU347	8 1/4	FU347	7 7/8	7 1/4	4 5/16	4 3/32	9 1/16	7/8	7/32	7/8	4 11/16	4 15/16	12 1/16	7/8	7/32	33.50
356	3 7/16	FEU355	9 7/8	FU355	9 1/4	8 1/2	5 5/32	4 15/16	11	1	7/32	1 1/4	5 17/32	6	14 17/32	1	11/32	58.00
	3 1/2	FEU356		FU356														
363	3 15/16	FEU363	10 15/16	FU363	10 3/8	9 1/2	5 25/32	5 9/16	12 1/8	1 1/8	7/32	1 3/8	6 3/16	7	16 1/16	1 3/32	11/32	78.00

Additional Notes

- Please call 1-866-REXNORD for availability
- Lubrication fitting tap size: for expansion units with shaft sizes 2 7/16 in and below, 1/4 in-28 UNF: for other expansion units and all fixed units, 1/8 in PT
- 1 1/8 in thru 1 7/16 in & 1 5/8 in thru 2 15/16 in shaft sizes also available with dual contact lip seals, add suffix N
- For the Selection Guide, Load Ratings and Speed Limits, see the Link-Belt 300 Series Heavy Duty Ball Bearings Engineering section on pages 426 - 429.
- Note: Dimensions subject to change. Certified dimensions of ordered material furnished on request.

FCA300, FCEA300

Photo Shows a 4-Bolt Ball Bearing Flanged Cartridge Unit

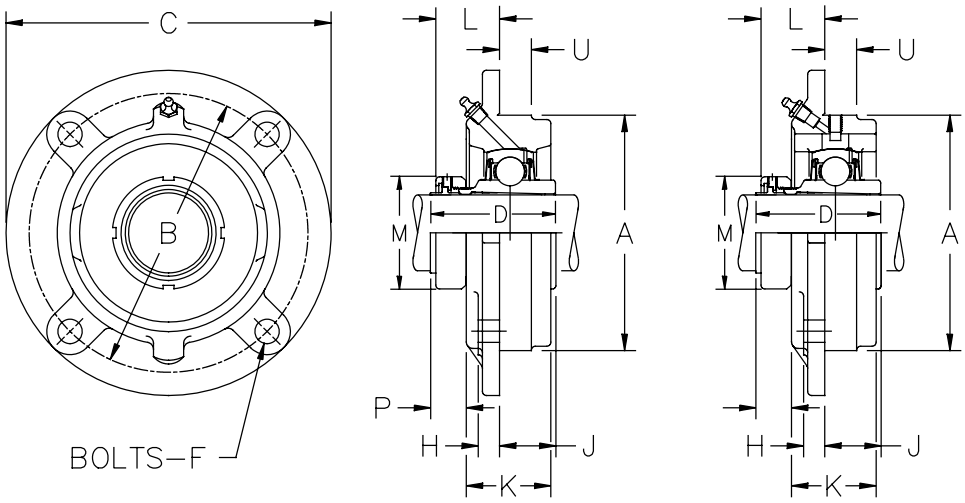

Product Features

- Spyglass Optical Strain Sensor (OSS) Technology
- Positive locking system
- Tapered adapter sleeve
- Corrosion-resistant powder coating
- Cast iron housing
- Fixed or Expansion - up to 3/8 in. Expansion
- Alignable & relubricatable
- See Features and Benefits for additional info on page 424.

Bearing Dimensions

Size Code	Shaft Diameter	Expansion Part Number	Fixed Part Number	A Pilot Diameter	B Bolt Hole Circle Diameter	L Mounting Surface to Collar Face	C	D	F Bolts	H	J	K	M	P	U	Total Axial Expansion	Approx. Weight
319	1 3/16	-	FCA319	4.125	5	1 7/8	6	2 3/4	7/16	7/16	31/32	1 7/16	2 5/32	1 7/32	5/8	-	5.50 lb
323	1 7/16	FCEA323	FCA323	4.500	5 3/8	1 21/32	6 3/8	2 47/64	7/16	7/16	1 3/32	1 9/16	2 3/8	1 3/32	5/8	3/16	6.20 lb
328	1 11/16	FCEA327	FCA327	5.500	6 1/2	1 63/64	7 5/8	3 1/8	1/2	1/2	1 5/32	1 59/64	2 41/64	1 5/8	3/4	3/16	11.25 lb
331	1 15/16	FCEA331	FCA331	6.000	7	1 7/8	8 1/8	3 7/32	1/2	9/16	1 25/64	2 1/8	2 55/64	1 1/64	7/8	1/4	15.00 lb
335	2 3/16	FCEA335	FCA335	6.375	7 5/8	1 53/64	9	3 23/64	5/8	5/8	1 17/32	2 9/32	3 15/64	1 61/64	15/16	9/32	19.00 lb
339	2 7/16	FCEA339	FCA339	6.875	8 1/8	1 5/64	9 1/2	3 27/32	5/8	5/8	1 11/16	2 15/32	3 19/32	1 7/64	15/16	9/32	22.00 lb
344	2 11/16	FCEA343	FCA343	7.750	9	2 5/16	10 3/8	4 1/4	5/8	3/4	1 15/16	2 27/32	4 3/32	1 15/64	1 1/8	7/32	33.00 lb
	2 3/4	FCEA344	FCA344														
347	2 15/16	FCEA347	FCA347	8.250	9 1/2	2 7/16	10 7/8	4 17/32	5/8	3/4	2 3/32	3 1/8	4 3/32	1 3/16	1 1/8	7/32	37.00 lb
356	3 7/16	FCEA355	FCA355	9.875	11 3/8	2 53/64	12 7/8	5 23/64	3/4	7/8	2 17/32	3 11/16	4 61/64	1 27/64	1 1/4	11/32	64.00 lb
363	3 15/16	FCEA363	FCA363	11.000	12 1/2	3 1/8	14	5 29/32	3/4	7/8	2 25/32	4 7/32	5 43/64	1 27/64	1 3/8	11/32	85.00 lb

Additional Notes

Please call 1-866-REXNORD for availability

Lubrication fitting tap size: for shaft sizes 1 3/16 in and below, 1/4 in-28 UNF: for all other shaft sizes, 1/8 in PT

Pilot Diameter tolerance, +.000 in/-.002 in *(+0.00 mm/-0.05 mm)*

Bore tolerance for mounting, +.002 in/-.000 in *(+0.05 mm/-0.00 mm)*

1 1/8 in thru 1 7/16 in & 1 5/8 in thru 2 15/16 in shaft sizes also available with dual contact lip seals, add suffix N

For the Selection Guide, Load Ratings and Speed Limits, see the Link-Belt 300 Series Heavy Duty Ball Bearings Engineering section on pages 426 - 429.

Note: Dimensions subject to change. Certified dimensions of ordered material furnished on request.

FCU3K00, FCEU3K00

Photo Shows a 4-Bolt Ball Bearing Flanged Cartridge Unit

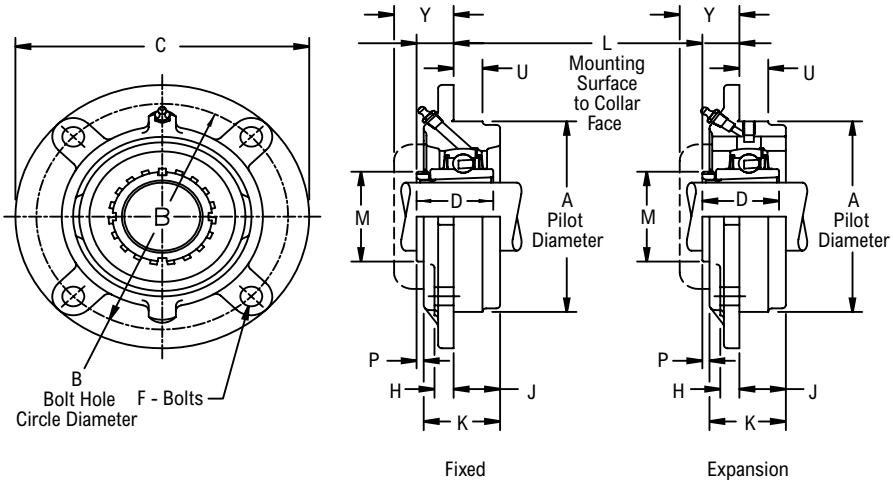

Product Features

- Corrosion-resistant powder coating
- Cast iron housing
- Enhanced life mounting style
- Fixed or Expansion - Up to 13/32 in expansion
- Alignable & relubricatable
- See Features and Benefits for additional info on page 424.

Bearing Dimensions

Size Code	Shaft Diameter	Expansion Part Number	Fixed Part Number	A Pilot Diameter	B Bolt Hole Circle Diameter	L Mounting Surface to Collar Face	C	D	F Bolts	H	J	K	M	P	U	Y	Total Axial Expansion	Approx. Weight
331	1 11/16	FCEU3K27	FCU3K27	6.000	7	1 5/16	8 1/8	2 17/32	1/2	9/16	1 13/64	2 1/8	2 11/16	39/64	7/8	1 23/32	1/4	14.80
335	1 15/16	FCEU3K31	FCU3K31	6.375	7 5/8	1 17/64	9	2 19/32	5/8	5/8	1 5/16	2 9/32	2 31/32	25/64	15/16	1 7/8	1/4	20.90
344	2 3/16	FCEU3K35	FCU3K35	7.750	9	1 29/64	10 3/8	3 1/32	5/8	3/4	1 9/16	2 27/32	3 3/8	3/8	1 1/8	2 1/4	13/32	30.50
347	2 7/16	FCEU3K39	FCU3K39	8.250	9 1/2	1 9/16	10 7/8	3 3/16	5/8	3/4	1 5/8	3 1/8	3 7/8	5/16	1 1/8	2 3/8	13/32	31.80
356	2 15/16	FCEU3K47	FCU3K47	9.875	11 3/8	1 5/8	12 7/8	3 17/32	3/4	7/8	1 29/32	3 11/16	4 13/32	7/32	1 1/4	2 25/32	13/32	55.00
363	3 7/16	FCEU3K55	FCU3K55	11.000	12 1/2	1 59/64	14	3 31/32	3/4	7/8	2 1/16	4 7/32	5 3/16	15/64	1 3/8	3 3/16	13/32	71.40

Additional Notes

- Please call 1-866-REXNORD for availability
- Lubrication fitting tap size, 1/8 in PT
- Pilot Diameter tolerance, +.000 in/-.002 in *(+0.00 mm/-0.05 mm)*
- Bore tolerance for mounting, +.002 in/-.000 in *(+0.05 mm/-0.00 mm)*
- 1 11/16 in thru 2 7/16 in shaft sizes also available with dual contact lip seals, add suffix N
- For the Selection Guide, Load Ratings and Speed Limits, see the Link-Belt 300 Series Heavy Duty Ball Bearings Engineering section on pages 426 - 429.

Note: Dimensions subject to change. Certified dimensions of ordered material furnished on request.

FCU300, FCEU300

Photo Shows a 4-Bolt Ball Bearing Flanged Cartridge Unit

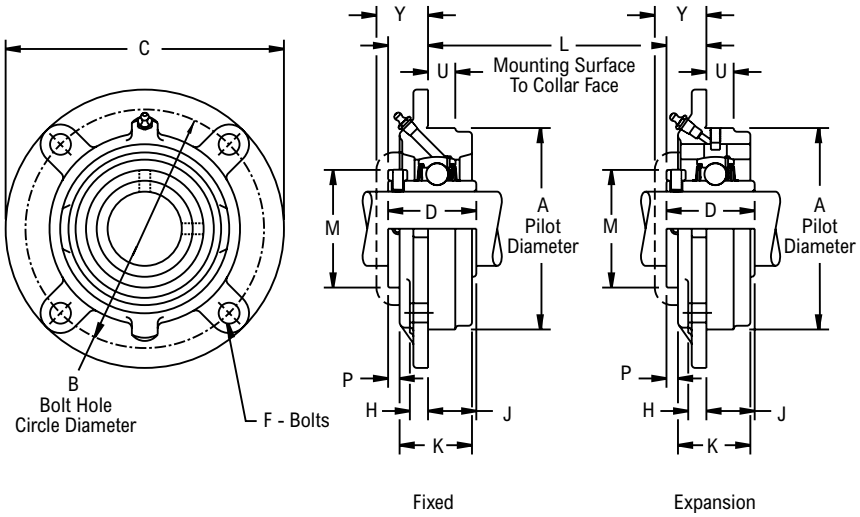

Product Features

- Corrosion-resistant powder coating
- Cast iron housing
- Spring locking setscrew mount
- Fixed or Expansion - Up to 13/32 in expansion
- Alignable & relubricatable
- See Features and Benefits for additional info on page 424.

Bearing Dimensions

Size Code	Shaft Diameter	Expansion Part Number	Fixed Part Number	A Pilot Diameter	B Bolt Hole Circle Diameter	L Mounting Surface to Collar Face	C	D	F Bolts	H	J	K	M	P	U	Y	Total Axial Expansion	Approx. Weight
312	3/4	-	FCU312	3.125	3 3/4	21/32	4 1/2	1 15/32	5/16	7/16	13/16	1 7/32	1 5/8	13/64	1/2	55/64	-	3.00
316	7/8	-	FCU314	3.688	4 1/2	51/64	5 3/8	1 43/64	3/8	7/16	7/8	1 5/16	2	19/64	5/8	1 3/64	-	4.50
	15/16	-	FCU315															
	1	-	FCU316															
319	1 1/8	-	FCU318	4.125	5	61/64	6	1 59/64	7/16	7/16	31/32	1 7/16	2 5/16	25/64	5/8	1 7/32	-	6.00
	1 3/16	-	FCU319															
323	1 1/4	FCEU320	FCU320	4.500	5 3/8	1	6 3/8	2 3/32	7/16	7/16	1 3/32	1 9/16	2 9/16	7/16	5/8	1 1/4	1/4	7.50
	1 3/8	FCEU322	FCU322															
	1 7/16	FCEU323	FCU323															
324	1 1/2	FCEU324	FCU324	5.000	6	1 9/64	7 1/8	2 5/16	1/2	1/2	1 11/64	1 23/32	3 1/16	1/2	5/8	1 23/64	1/4	10.00
328	1 5/8	FCEU326	FCU326	5.500	6 1/2	1 19/64	7 5/8	2 19/32	1/2	1/2	1 19/64	1 59/64	3 1/4	35/64	3/4	1 19/32	1/4	12.20
	1 11/16	FCEU327	FCU327															
	1 3/4	FCEU328	FCU328															
331	1 15/16	FCEU331	FCU331	6.000	7	1 27/64	8 1/8	2 13/16	1/2	9/16	1 25/64	2 1/8	3 7/16	9/16	7/8	1 23/32	1/4	15.00
335	2	FCEU332	FCU332	6.375	7 5/8	1 17/32	9	3 1/16	5/8	5/8	1 17/32	2 9/32	3 15/16	21/32	15/16	1 7/8	1/4	19.50
	2 1/8	FCEU334	FCU334															
	2 3/16	FCEU335	FCU335															
339	2 1/4	FCEU336	FCU336	6.875	8 1/8	1 5/8	9 1/2	3 5/16	5/8	5/8	1 11/16	2 15/32	4 3/16	21/32	15/16	2 1/8	1/4	23.50
	2 7/16	FCEU339	FCU339															
344	2 11/16	FCEU343	FCU343	7.750	9	1 7/8	10 3/8	3 13/16	5/8	3/4	1 15/16	2 27/32	4 3/4	25/32	1 1/8	2 1/4	13/32	32.50
	2 3/4	FCEU344	FCU344															
347	2 15/16	FCEU347	FCU347	8.250	9 1/2	2	10 7/8	4 3/32	5/8	3/4	2 3/32	3 1/8	4 15/16	3/4	1 1/8	2 3/8	13/32	37.00
356	3 7/16	FCEU355	FCU355	9.875	11 3/8	2 13/32	12 7/8	4 15/16	3/4	7/8	2 17/32	3 11/16	6	1	1 1/4	2 25/32	13/32	64.00
	3 1/2	FCEU356	FCU356															
363	3 15/16	FCEU363	FCU363	11.000	12 1/2	2 25/32	14	5 9/16	3/4	7/8	2 25/32	4 7/32	7	1 3/32	1 3/8	3 3/16	13/32	85.00

Additional Notes

- Please call 1-866-REXNORD for availability
- Lubrication fitting tap size: for shaft sizes 1 3/16 in and below, 1/4 in-28 UNF: for all other shaft sizes, 1/8 in PT
- Pilot Diameter tolerance, +.000 in/-.002 in *(+0.00 mm/-0.05 mm)*
- Bore tolerance for mounting, +.002 in/-.000 in *(+0.05 mm/-0.00 mm)*
- 1 1/8 in thru 1 7/16 in & 1 5/8 in thru 2 15/16 in shaft sizes also available with dual contact lip seals, add suffix N
- For the Selection Guide, Load Ratings and Speed Limits, see the Link-Belt 300 Series Heavy Duty Ball Bearings Engineering section on pages 426 - 429.
- Note: Dimensions subject to change. Certified dimensions of ordered material furnished on request.

CA300, CEA300

Photo Shows a Ball Bearing Cartridge Unit with Steel Housing

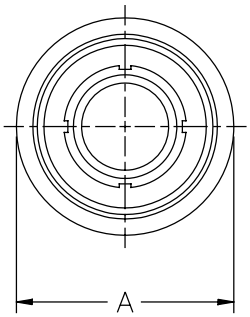

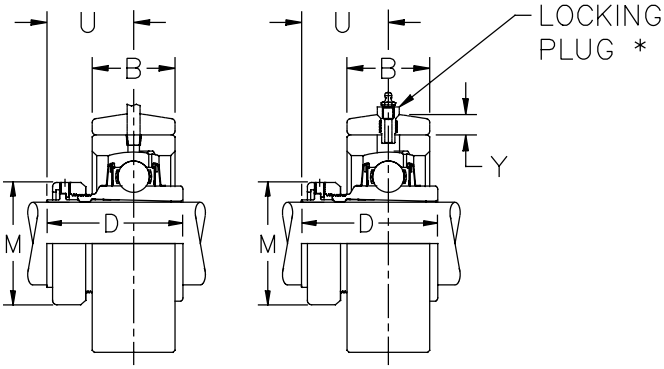

Product Features

- Spyglass Optical Strain Sensor (OSS) Technology
- Positive locking system
- Tapered adapter sleeve
- Corrosion-resistant powder coating
- Cast iron housing
- Fixed or Expansion - up to 3/8 in. Expansion
- Alignable & relubricatable
- See Features and Benefits for additional info on page 424.

Bearing Dimensions

Size Code	Shaft Diameter	Expansion Part Number	Fixed Part Number	A O.D.	B Cartridge Housing Width	D	M	U	Y	Total Axial Expansion	Approx. Weight
319	1 3/16	-	CA319	3.4380	1 3/8	2 3/4	2 5/32	1 63/64	13/32	-	2.68 lb
323	1 7/16	CEA323	CA323	3.7500	1 1/2	2 47/64	2 3/8	1 29/32	9/16	3/16	3.30 lb
328	1 11/16	CEA327	CA327	4.5940	1 27/32	3 1/8	2 41/64	2 7/32	9/16	3/16	6.20 lb
331	1 15/16	CEA331	CA331	5.0000	2 1/32	3 7/32	2 55/64	2 1/8	19/32	1/4	8.00 lb
335	2 3/16	CEA335	CA335	5.3750	2 3/16	3 23/64	3 15/64	2 9/64	11/16	9/32	10.00 lb
339	2 7/16	CEA339	CA339	5.7810	2 3/8	3 27/32	3 19/32	2 25/64	23/32	9/32	11.50 lb
344	2 11/16	CEA343	CA343	6.5620	2 3/4	4 1/4	4 3/32	2 11/16	13/16	7/32	17.00 lb
	2 3/4	CEA344	CA344								
347	2 15/16	CEA347	CA347	6.9690	3	4 17/32	4 3/32	2 51/64	13/16	7/32	20.00 lb
351	3 3/16	CEA351	CA351	7.5940	3 3/16	5 1/2	4 61/64	3 11/16	1	11/32	27.00 lb
356	3 7/16	CEA355	CA355	8.3750	3 9/16	5 23/64	4 61/64	3 21/64	1	11/32	36.00 lb
363	3 15/16	CEA363	CA363	9.3750	4 1/16	5 29/32	5 43/64	3 5/8	1	11/32	50.00 lb

Additional Notes

- Please call 1-866-REXNORD for availability
- Lubrication fitting tap size: for expansion units with shaft sizes 2 7/16 in and below, 1/4 in-28 UNF: for other expansion units and all fixed units, 1/8 in PT
- O.D. tolerance, +.000 in/-.002 in *(+0.00 mm/-0.05 mm)*
- Bore tolerance for mounting, +.002 in/-.000 in *(+0.05 mm/-0.00 mm)*
- 1 1/8 in thru 1 7/16 in & 1 5/8 in thru 2 15/16 in shaft sizes also available with dual contact lip seals, add suffix N
- Locking plug thread sizes: for shaft sizes 2 7/16 in and below, 7/16 in-20 UNF: for all other shaft sizes, 5/8 in-18 UNF
- For the Selection Guide, Load Ratings and Speed Limits, see the Link-Belt 300 Series Heavy Duty Ball Bearings Engineering section on pages 426 - 429.
- Note: Dimensions subject to change. Certified dimensions of ordered material furnished on request.

CU3K00, CEU3K00

Photo Shows a Ball Bearing Cartridge Unit with Steel Housing

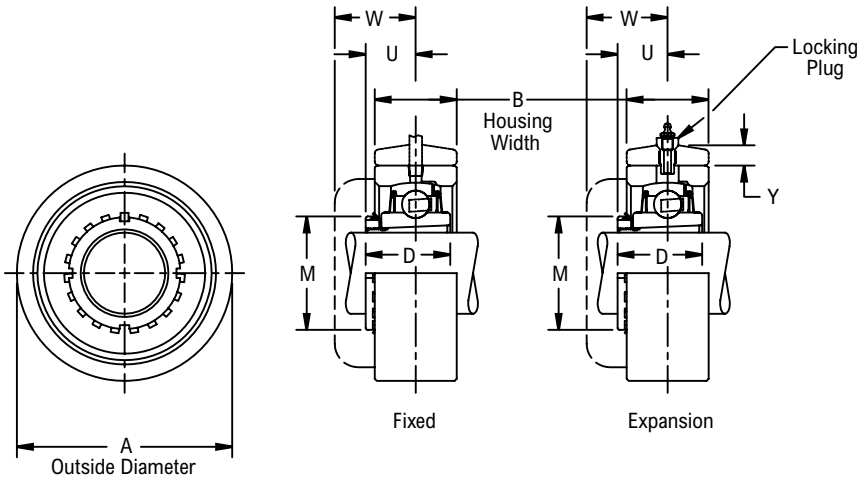

Product Features

- Steel housing
- Enhanced life mounting style
- Fixed or Expansion - Up to 11/32 in expansion
- Alignable & relubricatable
- See Features and Benefits for additional info on page 424.

Bearing Dimensions

Size Code	Shaft Diameter	Expansion Part Number	Fixed Part Number	A O.D.	B Cartridge Housing Width	D	M	U	W	Y	Total Axial Expansion	Approx. Weight
331	1 11/16	CEU3K27	CU3K27	5.0000	2 1/32	2 17/32	2 11/16	1 35/64	1 31/32	19/32	1/4	7.70
335	1 15/16	CEU3K31	CU3K31	5.3750	2 3/16	2 19/32	2 31/32	1 37/64	2 3/16	11/16	9/32	9.70
344	2 3/16	CEU3K35	CU3K35	6.5620	2 3/4	3 1/32	3 3/8	1 53/64	2 5/8	13/16	7/32	17.00
347	2 7/16	CEU3K39	CU3K39	6.9690	3	3 3/16	3 7/8	1 15/16	2 3/4	13/16	7/32	19.70
351	2 11/16	CEU3K43	CU3K43	7.5940	3 3/16	3 5/16	4 5/32	2	3	1	11/32	26.90
356	2 15/16	CEU3K47	CU3K47	8.3750	3 9/16	3 17/32	4 13/32	2 1/8	3 9/32	1	11/32	35.50
363	3 7/16	CEU3K55	CU3K55	9.3750	4 1/16	3 31/32	5 3/16	2 27/64	3 11/16	1	11/32	49.50

Additional Notes

- Please call 1-866-REXNORD for availability
- Lubrication fitting tap size: for expansion units with shaft sizes 1 15/16 in and below, 1/4 in-28 UNF: for other expansion units and all fixed units, 1/8 in PT
- O.D. tolerance, +.000 in/-.002 in *(+0.00 mm/-0.05 mm)*
- Bore tolerance for mounting, +.002 in/-.000 in *(+0.05 mm/-0.00 mm)*
- 1 11/16 in thru 2 7/16 in shaft sizes also available with dual contact lip seals, add suffix N
- Locking plug thread sizes: for shaft sizes 1 15/16 in and below, 7/16 in-20 UNF: for all other shaft sizes, 5/8 in-18 UNF
- For the Selection Guide, Load Ratings and Speed Limits, see the Link-Belt 300 Series Heavy Duty Ball Bearings Engineering section on pages 426 - 429.
- Note: Dimensions subject to change. Certified dimensions of ordered material furnished on request.

CU300, CEU300

Photo Shows a Ball Bearing Cartridge Unit with Steel Housing

Product Features

Steel housing
Spring locking setscrew mount
Fixed or Expansion - Up to 11/32 in expansion
Alignable & relubricatable
See Features and Benefits for additional info on page 424.

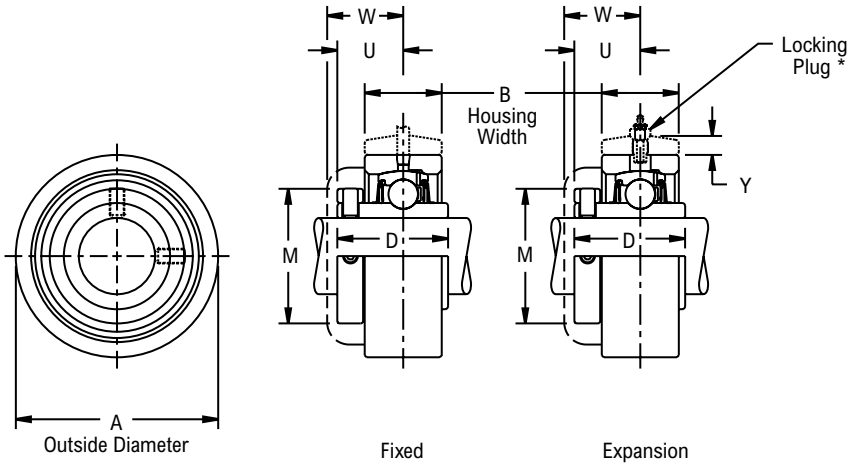

Bearing Dimensions

Size Code	Shaft Diameter	Expansion Part Number	Fixed Part Number	A O.D.	B Cartridge Housing Width	D	M	U	W	Y	Total Axial Expansion	Approx. Weight
312	3/4	CEU312	CU312	2.4690	1 5/32	1 15/32	1 5/8	27/32	1 3/64	3/8	3/16	1.20
316	7/8	CEU314	CU314	3.0000	1 1/4	1 43/64	2	63/64	1 15/64	3/8	3/16	2.00
	15/16	CEU315	CU315									
	1	CEU316	CU316									
319	1 1/8	CEU318	CU318	3.4380	1 3/8	1 59/64	2 5/16	1 9/64	1 13/32	13/32	3/16	2.70
	1 3/16	CEU319	CU319									
323	1 1/4	CEU320	CU320	3.7500	1 1/2	2 3/32	2 9/16	1 1/4	1 1/2	9/16	3/16	3.50
	1 3/8	CEU322	CU322									
	1 7/16	CEU323	CU323									
324	1 1/2	CEU324	CU324	4.1880	1 21/32	2 5/16	3 1/16	1 25/64	1 39/64	9/16	3/16	5.00
328	1 5/8	CEU326	CU326	4.5940	1 27/32	2 19/32	3 1/4	1 35/64	1 27/32	9/16	3/16	6.50
	1 11/16	CEU327	CU327									
	1 3/4	CEU328	CU328									
331	1 15/16	CEU331	CU331	5.0000	2 1/32	2 13/16	3 7/16	1 43/64	1 31/32	19/32	1/4	7.70
335	2	CEU332	CU332	5.3750	2 3/16	3 1/16	3 15/16	1 27/32	2 3/16	11/16	9/32	9.70
	2 1/8	CEU334	CU334									
	2 3/16	CEU335	CU335									
339	2 1/4	CEU336	CU336	5.7810	2 3/8	3 5/16	4 3/16	1 15/16	2 7/16	23/32	9/32	12.00
	2 7/16	CEU339	CU339									
344	2 11/16	CEU343	CU343	6.5620	2 3/4	3 13/16	4 3/4	2 1/4	2 5/8	13/16	7/32	17.00
	2 3/4	CEU344	CU344									
347	2 15/16	CEU347	CU347	6.9690	3	4 3/32	4 15/16	2 3/8	2 3/4	13/16	7/32	19.70
351	3	CEU348	CU348	7.5940	3 3/16	4 13/32	5 11/16	2 19/32	3	1	11/32	26.90
	3 3/16	CEU351	CU351									
356	3 7/16	CEU355	CU355	8.3750	3 9/16	4 15/16	6	2 29/32	3 9/32	1	11/32	35.50
	3 1/2	CEU356	CU356									
363	3 15/16	CEU363	CU363	9.3750	4 1/16	5 9/16	7	3 9/32	3 11/16	1	11/32	49.50

Additional Notes

Please call 1-866-REXNORD for availability
Lubrication fitting tap size: for expansion units with shaft sizes 2 7/16 in and below, 1/4 in-28 UNF: for other expansion units and all fixed units, 1/8 in PT
O.D. tolerance, +.000 in/-.002 in *(+0.00 mm/-0.05 mm)*
Bore tolerance for mounting, +.002 in/-.000 in *(+0.05 mm/-0.00 mm)*
1 1/8 in thru 1 7/16 in & 1 5/8 in thru 2 15/16 in shaft sizes also available with dual contact lip seals, add suffix N

Locking plug thread sizes: for shaft sizes 2 7/16 in and below, 7/16 in-20 UNF: for all other shaft sizes, 5/8 in-18 UNF
For the Selection Guide, Load Ratings and Speed Limits, see the Link-Belt 300 Series Heavy Duty Ball Bearings Engineering section on pages 426 - 429.
Note: Dimensions subject to change. Certified dimensions of ordered material furnished on request.

TA300

Photo Shows a Ball Bearing Take-Up Unit

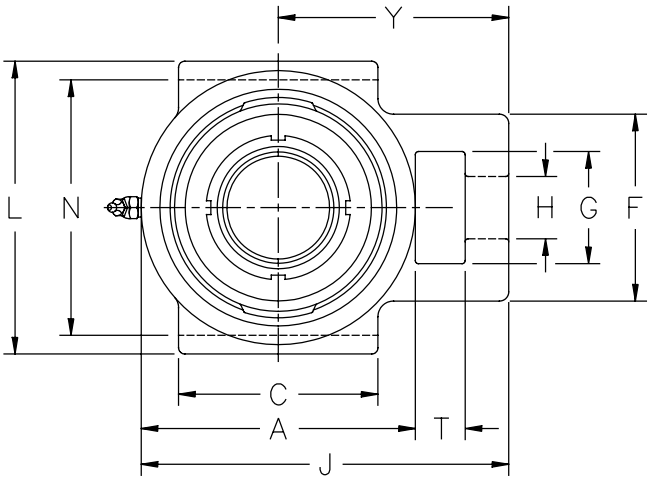

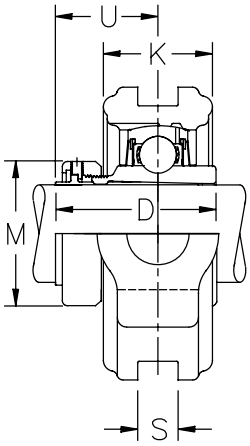

Product Features

- Spyglass Optical Strain Sensor (OSS) Technology
- Positive locking system
- Tapered adapter sleeve
- Corrosion-resistant powder coating
- Cast iron housing
- Fixed or Expansion - up to 3/8 in. Expansion
- Alignable & relubricatable
- See Features and Benefits for additional info on page 424.

Bearing Dimensions

Size Code	Shaft Diameter	Part Number	H Adjusting Screw Hole Diameter	N Slot Spacing	S Slot Width	A	C	D	F	G	J	K	L	M	T	U	Y	Approx. Weight
323	1 7/16	TA323	7/8	3.500	0.531	4	2 3/4	2 47/64	2 3/8	1 7/16	5 1/4	1 5/8	4 1/8	2 3/8	5/8	1 29/32	3 1/4	5.00 lb
331	1 15/16	TA331	1 1/4	5.125	0.812	5 1/2	4	3 7/32	3 3/4	2 1/4	7 3/8	2 3/16	5 7/8	2 55/64	1	2 1/8	4 5/8	13.50 lb
335	2 3/16	TA335	1 1/4	5.500	0.812	5 13/16	4 1/8	3 23/64	3 3/4	2 1/4	7 3/4	2 3/8	6 1/4	3 15/64	1	2 9/64	4 27/32	16.00 lb
339	2 7/16	TA339	1 3/8	6.000	1.062	6 1/4	4 1/2	3 27/32	4 1/8	2 1/2	8 5/8	2 9/16	6 3/4	3 19/32	1 3/8	2 25/64	5 7/16	20.00 lb
347	2 15/16	TA347	1 5/8	7.500	1.312	8	5 3/4	4 17/32	4 3/4	2 3/4	10 1/2	3 1/4	8 1/4	4 3/32	1 1/4	2 51/64	6 1/2	38.00 lb

Additional Notes

- Please call 1-866-REXNORD for availability
- Lubrication fitting tap size, 1/8 in PT
- Take-up slot spacing & width tolerance, +.000 in/-.015 in *(+0.00 mm/-0.38 mm)*
- 1 1/8 in thru 1 7/16 in & 1 5/8 in thru 2 15/16 in shaft sizes also available with dual contact lip seals, add suffix N
- For the Selection Guide, Load Ratings and Speed Limits, see the Link-Belt 300 Series Heavy Duty Ball Bearings Engineering section on pages 426 - 429.
- Note: Dimensions subject to change. Certified dimensions of ordered material furnished on request.

TU300

Photo Shows a Ball Bearing Take-Up Unit

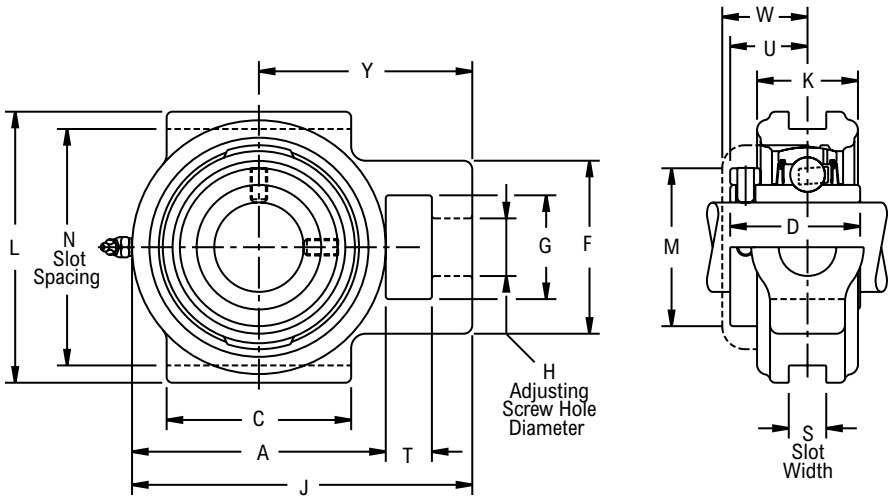

Product Features

- Corrosion-resistant powder coating
- Cast iron housing
- Spring locking setscrew mount
- Alignable & relubricatable
- Machined slots
- See Features and Benefits for additional info on page 424.

Bearing Dimensions

Size Code	Shaft Diameter	Part Number	H Adjusting Screw Hole Diameter	N Slot Spacing	S Slot Width	A	C	D	F	G	J	K	L	M	T	U	W	Y	Approx. Weight
316	7/8	TU314	3/4	3.000	0.531	3 5/16	2 1/4	1 43/64	2	1 1/4	4 3/8	1 3/8	3 5/8	2	5/8	63/64	1 15/64	2 3/4	3.20
	15/16	TU315																	
	1	TU316																	
323	1 1/4	TU320	7/8	3.500	0.531	4	2 3/4	2 3/32	2 3/8	1 7/16	5 1/4	1 5/8	4 1/8	2 9/16	5/8	1 1/4	1 1/2	3 1/4	5.50
	1 3/8	TU322																	
	1 7/16	TU323																	
324	1 1/2	TU324	1 1/8	4.125	0.687	4 5/8	3 1/4	2 5/16	3 3/16	1 15/16	6 1/8	1 25/32	4 7/8	3 1/16	3/4	1 25/64	1 39/64	3 13/16	8.50
331	1 15/16	TU331	1 1/4	5.125	0.812	5 1/2	4	2 13/16	3 3/4	2 1/4	7 3/8	2 3/16	5 7/8	3 7/16	1	1 43/64	1 31/32	4 5/8	13.70
335	2	TU332	1 1/4	5.500	0.812	5 13/16	4 1/8	3 1/16	3 3/4	2 1/4	7 3/4	2 3/8	6 1/4	3 15/16	1	1 27/32	2 3/16	4 27/32	17.20
	2 1/8	TU334																	
	2 3/16	TU335																	
339	2 1/4	TU336	1 3/8	6.000	1.062	6 1/4	4 1/2	3 5/16	4 1/8	2 1/2	8 5/8	2 9/16	6 3/4	4 3/16	1 3/8	1 15/16	2 7/16	5 7/16	20.00
	2 7/16	TU339																	
347	2 15/16	TU347	1 5/8	7.500	1.312	8	5 3/4	4 3/32	4 3/4	2 3/4	10 1/2	3 1/4	8 1/4	4 15/16	1 1/4	2 3/8	2 3/4	6 1/2	37.50

Additional Notes

- Please call 1-866-REXNORD for availability
- Lubrication fitting tap size, 1/8 in PT
- Take-up slot spacing & width tolerance, +.000 in/-.015 in *(+0.00 mm/-0.38 mm)*
- 1 1/8 in thru 1 7/16 in & 1 5/8 in thru 2 15/16 in shaft sizes also available with dual contact lip seals, add suffix N
- For the Selection Guide, Load Ratings and Speed Limits, see the Link-Belt 300 Series Heavy Duty Ball Bearings Engineering section on pages 426 - 429.
- Note: Dimensions subject to change. Certified dimensions of ordered material furnished on request.

LHD FRAME

Photo Shows a Protected Screw Type Frame

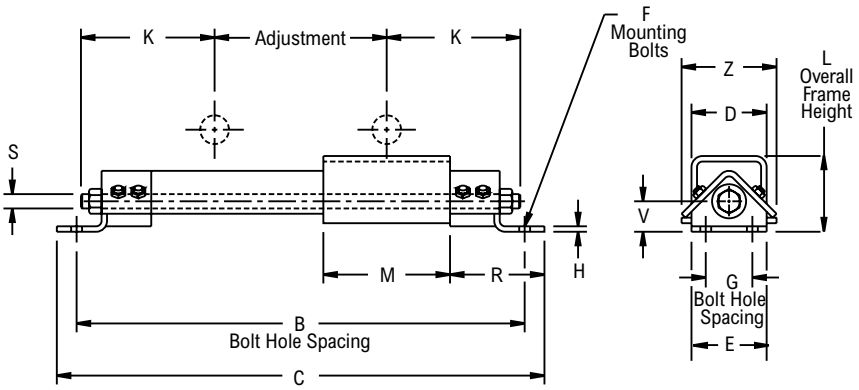

Product Features

Protected screw type frame
Welded steel frame

Bearing Dimensions

Size Code	Shaft Size	Part Number	Adjustment Length	B Bolt Hole Spacing	G Bolt Hole Spacing in Width Direction	L Overall Frame Height	C	D	E	F	H	K	M	R	S	V	Z	Approx. Weight
LHD20	7/8-1 15/16	LHD2012	12	29	2 1/2	5 1/4	31	4	5	5/8	1/4	8 1/2	11	4	3/4	2	6 1/4	48.00
		LHD2018	18	35			37											52.00
		LHD2024	24	41			43											56.00
		LHD2030	30	47			49											65.00
		LHD2036	36	53			55											70.00
		LHD2048	48	65			67											81.00
LHD25	2-2 3/16	LHD2512	12	32 3/4	3	6 1/4	35 1/4	5	5 1/2	5/8	3/8	10 3/8	13 1/4	5	1	2 9/16	7 1/8	81.00
		LHD2518	18	38 3/4			41 1/4											100.00
		LHD2524	24	44 3/4			47 1/4											110.00
		LHD2530	30	50 3/4			53 1/4											115.00
		LHD2536	36	56 3/4			59 1/4											120.00
		LHD2548	48	68 3/4			71 1/4											127.00
LHD30	2 1/4-2 7/16	LHD3012	12	35 1/2	3	7	38 1/4	6	6 1/2	3/4	1/2	11 3/4	14 1/4	6	1	2 1/2	9	158.00
		LHD3018	18	41 1/2			44 1/4											162.00
		LHD3024	24	47 1/2			50 1/4											166.00
		LHD3030	30	53 1/2			56 1/4											173.00
		LHD3036	36	59 1/2			62 1/4											183.00
		LHD3048	48	71 1/2			74 1/4											214.00
LHD35	2 11/16-3 3/16	LHD3512	12	37 1/4	3	7	40	6	6 1/2	3/4	1/2	12 5/8	16	6	1 1/4	2 1/2	9	173.00
		LHD3518	18	43 1/4			46											190.00
		LHD3524	24	49 1/4			52											195.00
		LHD3530	30	55 1/4			58											200.00
		LHD3536	36	61 1/4			64											210.00
		LHD3548	48	73 1/4			76											234.00
LHD40	3 7/16-3 15/16	LHD4012	12	41 1/4	3	7	44	7	6 1/2	3/4	1/2	14 5/8	20	6	1 1/2	2 1/2	9 13/16	175.00
		LHD4018	18	47 1/4			50											220.00
		LHD4024	24	53 1/4			56											265.00
		LHD4030	30	59 1/4			62											270.00
		LHD4036	36	65 1/4			68											290.00
		LHD4048	48	77 1/4			80											300.00

Additional Notes

Please call 1-866-REXNORD for availability
Note: Dimensions subject to change. Certified dimensions of ordered material furnished on request.

AG300L

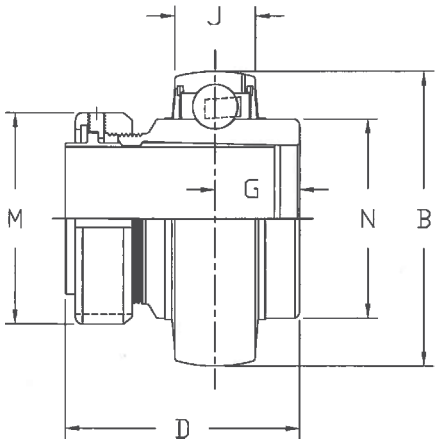

Product Features

Spyglass Optical Strain Sensor (OSS) Technology
Positive locking system
Tapered adapter sleeve
Enhanced life mounting style
Sealed & relubricatable
Alignable spherical O.D.
See Features and Benefits for additional info on page 424.

Bearing Dimensions

Size Code	Shaft Diameter	Part Number	B O.D.	J Outer Ring Width	D	G	M	N	Approx. Weight
319	1 3/16	AG319L	2.8346	0.9449	2 3/4	25/32	2 5/32	1.708	1.50
323	1 7/16	AG323L	3.1496	1.0236	2 47/64	27/32	2 3/8	1.946	1.90
328	1 11/16	AG327L	3.937	1.1811	3 1/8	59/64	2 41/64	2.443	3.80
331	1 15/16	AG331L	4.3307	1.2598	3 7/32	1 9/64	2 55/64	2.701	5.00
335	2 3/16	AG335L	4.7244	1.3386	3 23/64	1 7/32	3 15/64	2.959	6.00
339	2 7/16	AG339L	5.1181	1.4173	3 27/32	1 3/8	3 19/32	3.216	7.50
344	2 11/16	AG343L	5.9055	1.6142	4 1/4	1 9/16	4 3/32	3.732	11.50
	2 3/4	AG344L							
347	2 15/16	AG347L	6.2992	1.6929	4 17/32	1 23/32	4 3/32	3.990	13.00
351	3 3/16	AG351L	6.6929	1.7717	5 1/2	1 13/16	4 61/64	4.247	17.00
356	3 7/16	AG355L	7.4806	1.9291	5 23/64	2 1/32	4 61/64	4.763	23.50
363	3 15/16	AG363L	8.4646	2.1654	5 29/32	2 9/32	5 43/64	5.339	33.00

Additional Notes

Please call 1-866-REXNORD for availability
1 11/16 in thru 2 7/16 in shaft sizes also available with dual contact lip seals, add suffix N
For the Selection Guide, Load Ratings and Speed Limits, see the Link-Belt 300 Series Heavy Duty Ball Bearings Engineering section on pages 426 - 429.
Note: Dimensions subject to change. Certified dimensions of ordered material furnished on request.

UG3K00L

Photo Shows an Unmounted Ball Bearing Unit

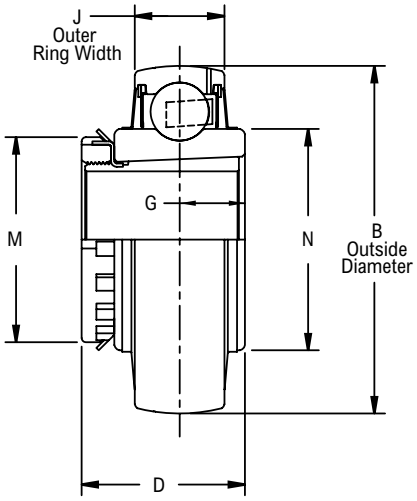

Product Features

Enhanced life mounting style
Sealed & relubricatable
Alignable spherical O.D.
See Features and Benefits for additional info on page 424.

Bearing Dimensions

Size Code	Shaft Diameter	Part Number	B O.D.	J Outer Ring Width	D	G	M	N	Approx. Weight
331	1 11/16	UG3K27L	4.3307	1.2598	2 19/32	31/32	2 11/16	2.702	5.70
335	1 15/16	UG3K31L	4.7244	1.3386	2 13/16	1	2 31/32	2.959	6.60
344	2 3/16	UG3K35L	5.9055	1.6142	3 1/16	1 3/16	3 3/8	3.732	11.50
347	2 7/16	UG3K39L	6.2992	1.6929	3 5/16	1 1/4	3 7/8	3.990	14.40
351	2 11/16	UG3K43L	6.6929	1.7717	3 13/16	1 5/16	4 5/32	4.247	21.50
356	2 15/16	UG3K47L	7.4806	1.9291	4 3/32	1 13/32	4 13/32	4.763	23.50
363	3 7/16	UG3K55L	8.4646	2.1654	4 15/16	1 9/16	5 3/16	5.339	33.00

Additional Notes

Please call 1-866-REXNORD for availability
1 11/16 in thru 2 7/16 in shaft sizes also available with dual contact lip seals, add suffix N
For the Selection Guide, Load Ratings and Speed Limits, see the Link-Belt 300 Series Heavy Duty Ball Bearings Engineering section on pages 426 - 429.
Note: Dimensions subject to change. Certified dimensions of ordered material furnished on request.

UG300L

Photo Shows an Unmounted Ball Bearing Unit

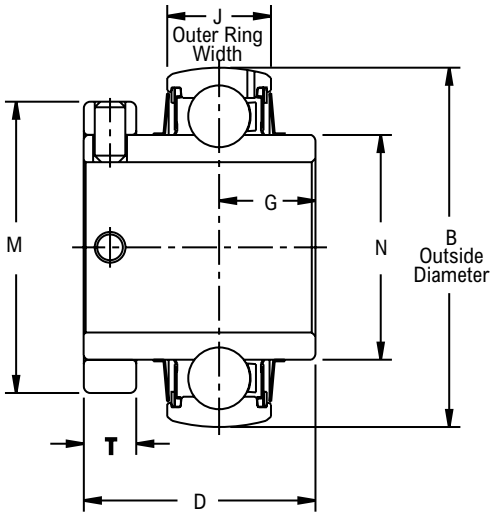

Product Features

Spring locking setscrew mount
Sealed & relubricatable
Alignable spherical O.D.
See Features and Benefits for additional info on page 424.

Bearing Dimensions

Size Code	Shaft Diameter	Part Number	B O.D.	J Outer Ring Width	D	G	M	N	T	Approx. Weight
312	3/4	UG312L	2.0472	0.7874	1 15/32	5/8	1 5/8	1.194	11/32	1.00
316	7/8	UG314L	2.4409	0.8661	1 43/64	11/16	2	1.451	13/32	1.50
	15/16	UG315L								
	1	UG316L								
319	1 1/8	UG318L	2.8346	0.9449	1 59/64	25/32	2 5/16	1.708	1/2	1.70
	1 3/16	UG319L								
323	1 1/4	UG320L	3.1496	1.0236	2 3/32	27/32	2 9/16	1.946	1/2	2.10
	1 3/8	UG322L								
	1 7/16	UG323L								
324	1 1/2	UG324L	3.5433	1.1024	2 5/16	59/64	3 1/16	2.204	9/16	2.90
328	1 5/8	UG326L	3.9370	1.1811	2 19/32	1 3/64	3 1/2	2.443	5/8	3.95
	1 11/16	UG327L								
	1 3/4	UG328L								
331	1 15/16	UG331L	4.3307	1.2598	2 13/16	1 9/64	3 7/16	2.701	21/32	4.70
335	2	UG332L	4.7244	1.3386	3 1/16	1 7/32	3 15/16	2.959	3/4	6.60
	2 1/8	UG334L								
	2 3/16	UG335L								
339	2 1/4	UG336L	5.1181	1.4173	3 5/16	1 3/8	4 3/16	3.216	3/4	7.95
	2 7/16	UG339L								
344	2 11/16	UG343L	5.9055	1.6142	3 13/16	1 9/16	4 3/4	3.732	7/8	11.50
	2 3/4	UG344L								
347	2 15/16	UG347L	6.2992	1.6929	4 3/32	1 23/32	4 15/16	3.990	7/8	13.00
351	3	UG348L	6.6929	1.7717	4 13/32	1 13/16	5 11/16	4.247	1	18.00
	3 3/16	UG351L								
356	3 7/16	UG355L	7.4806	1.9291	4 15/16	2 1/32	6	4.763	1 1/8	23.50
	3 1/2	UG356L								
363	3 15/16	UG363L	8.4646	2.1654	5 9/16	2 9/32		5.339	1 1/4	33.00

Additional Notes

Please call 1-866-REXNORD for availability
1 1/8 in thru 1 7/16 in & 1 5/8 in thru 2 15/16 in shaft sizes also available with dual contact lip seals, add suffix N
For the Selection Guide, Load Ratings and Speed Limits, see the Link-Belt 300 Series Heavy Duty Ball Bearings Engineering section on pages 426 - 429.
Note: Dimensions subject to change. Certified dimensions of ordered material furnished on request.

YG300

Photo Shows an Unmounted Ball Bearing Unit

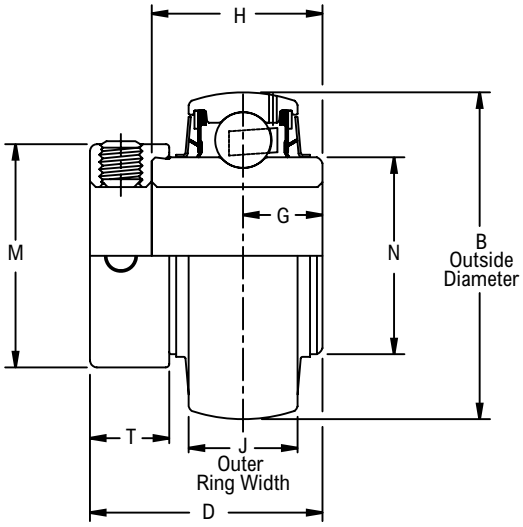

Product Features

Eccentric cam locking device
Sealed & relubricatable
Alignable spherical O.D.
See Features and Benefits for additional info on page 424.

Bearing Dimensions

Size Code	Shaft Diameter	Part Number	B O.D.	J Outer Ring Width	D	G	H	M	N	T	Approx. Weight
319	1 3/16	YG319NL	2.8346	0.9449	2 1/32	25/32	1.48	1 15/16	1.708	11/16	1.70
323	1 7/16	YG323NL	3.1496	1.0236	2 5/32	27/32	1.62	2 3/16	1.946	11/16	2.10
328	1 11/16	YG327NL	3.9370	1.1811	2 9/16	1 3/64	1.94	2 3/4	2.443	13/16	3.95
331	1 15/16	YG331NL	4.3307	1.2598	2 25/32	1 9/64	2.08	3	2.701	7/8	4.70
335	2 3/16	YG335NL	4.7244	1.3386	2 15/16	1 7/32	2.24	3 1/4	2.959	7/8	6.60
339	2 7/16	YG339NL	5.1181	1.4173	3 5/32	1 3/8	2.47	3 1/2	3.216	15/16	7.95
344	2 11/16	YG343NL	5.9055	1.6142	3 9/16	1 9/16	2.74	4	3.732	1 1/16	11.50
347	2 15/16	YG347NL	6.2992	1.6929	3 15/16	1 23/32	2.93	4 7/16	3.990	1 1/4	13.00

Additional Notes

Please call 1-866-REXNORD for availability
N dual contact lip seals standard
For the Selection Guide, Load Ratings and Speed Limits, see the Link-Belt 300 Series Heavy Duty Ball Bearings Engineering section on pages 426 - 429.
Note: Dimensions subject to change. Certified dimensions of ordered material furnished on request.

SHURLOK Installation Tools

We are pleased to offer a quick installation tool for the SHURLOK bearing. This tool is designed as a supplement to the spanner wrench or drift pin method. The installation tool can be attached to a 3/4" or 1/2" drive ratchet, torque wrench, or breaker bar which can be used as a lever arm. Simply fit the installation tool over the locknut by placing the tool's teeth into the locknut slots. The tool's unique shape allows it to be used from the side or the top of the bearing. To order, refer to the table below for the installation tool that fits your shaft size.

Bearing Size	Wrench Style Installation Tool Part Number	Impact Style Installation Tool Part Number
323	N6107-SPN	N6107-IMP
327	N6111-SPN	N6111-IMP
331	105-90420-11	105-90425-11
335	105-90420-21	105-90425-21
339	105-90420-31	105-90425-31
343/344/347	105-90420-41	105-90425-41
351/355	105-90420-51	105-90425-51
363	105-90420-61	105-90425-61

Ball Bearings
Units: Klean-Gard & Dura-Klean

Contents

	Page
Features and Benefits	454
Nomenclature	455
Engineering	456
Dimensions	
Klean-Gard Pillow Blocks	459
Klean-Gard Flange Blocks	460
Dura-Klean Pillow Blocks	463
Dura-Klean Flange Blocks	465
Dura-Klean Take-up Blocks	468
Klean-Gard Accessory Kits	469

Industries Served

Food and Beverage

Klean-Gard & Dura-Klean Ball Bearings

For Beverage & Food Conveying Applications

Klean-Gard

Available in polypropylene (white) housings with stainless steel inserts. Housing styles available in pillow blocks, 2-bolt, 3-bolt & 4-bolt flanges. Snap-on cap (open or closed) available. Solid-back housings are designed to inhibit the growth of bacteria, mold, and mildew that may cause discoloration, odor, or degradation.

Always maintain good hygiene; proper cleaning procedures are still required.

Interchangeable with cast iron units. Beverage bearing configuration available upon request, add the prefix "W."

Dura-Klean

Rilsan nylon coated with black oxide inserts and food grade grease.

Available in pillow blocks, 2-bolt, 3-bolt & 4-bolt flanges and take-up units up to 1 15/16" bore size.

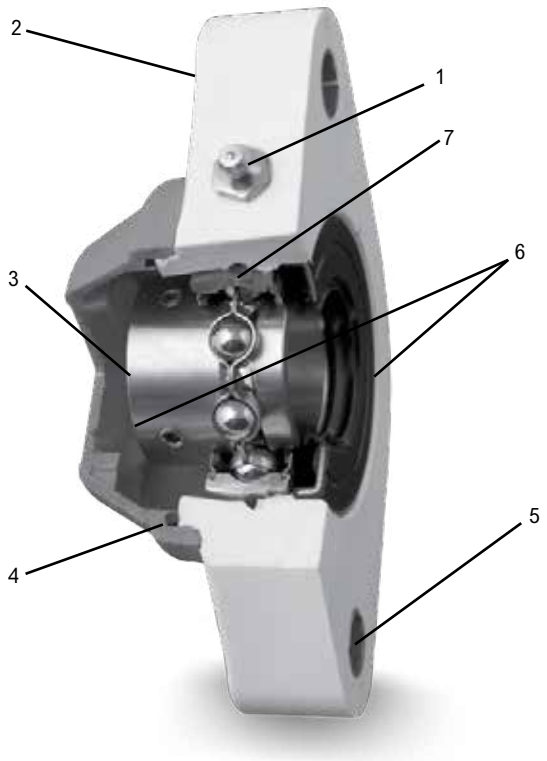

1. Corrosion Resistant Fittings for Relubrication

Bearing insert factory prelubricated with food-grade grease.

2. Reinforced Housing Material

Rugged, reinforced housing material available in Polypropylene (white) for extreme corrosion resistance.

3. Inch or Metric Shaft Sizes Available

4. Auxiliary Caps

Both open and closed auxiliary safety caps fit tightly to the machined housing and are sealed with heavy duty O-rings.

5. Stainless Steel Bushings and Washers

AISI 316 stainless steel spacer bushing and washer for trouble-free, positive mounting.

6. Rotary Shaft Seals

Front and rear auxiliary rotary shaft seals provided with spring loaded double lip seal to guard critical bearing components and prevent conveyor contamination.

7. Stainless Steel Ball Bearings

Alignable, high capacity, stainless steel ball bearing mounted with setscrews to the shaft. Integral bearing lip seals.

Klean-Gard Nomenclature

KL FX SS 2 E 20 DC V

Symbol	Description
KL	Polypropylene (White) housing material
W	Beverage unit with water drainage features
F	Flanged unit, 4-bolt
FB	Flanged bracket unit, 3-bolt
FX	Flanged unit, 2-bolt
P	Pillow block, standard backing
SS	Extended inner ring, stainless steel insert, molded lip seals
2	Series 200 ball bearing designation
E	Inner ring bore equal to a bore of the next larger bearing group
20	Shaft size in sixteenths of an inch
M30	Shaft size in millimeters
None	Open end unit, basic unit
C	Closed end unit, no auxiliary seals
D	Open end unit, end cap with seal and rear auxiliary dual lip seal
DC	Closed end unit, end cap and rear auxiliary dual lip seal
V	Viton auxiliary seals
K4	100% Grease filled
K6	Lubed for Life

Dura-Klean Nomenclature

W F 3 S 2 E 20 E

Symbol	Description
W	Dura-Klean (White) housing
F	Flanged unit, 3 and 4-bolt
FB	Flanged bracket unit, 3-bolt
FX	Flanged unit, 2-bolt
P	Pillow block, standard backing
PT	Pillow block, tapped base
TH	Take-up, wide slot
3	Integral bearing seals
S	Extended inner ring, spring locking, black oxide coated rings
2	Series 200 ball bearing designation
E	Inner ring bore equal to a bore of the next larger bearing group
20	Shaft size in sixteenths of an inch
M30	Shaft size in millimeters
E	Molded single lip seals
K4	100% Grease filled
K6	100% Grease filled and housing plugged

Klean-Gard & Dura-Klean Ball Bearings Selection Guide

To select a bearing, determine the applied radial load, the applied thrust load, the desired Rating Life, and applicable operating conditions. The procedure shown here will aid in selecting a bearing to meet an L_{10} design life. The formulas for calculating life expectancy should be used to determine the Rating Life L_{10} for the bearing selected.

The selection procedures and rating formulas shown here are in agreement with The American Bearing Manufacturers Association Standards and ANSI/ABMA Standards STD 9-1990. Ratings are based on fatigue life. The Rating Life or fatiguelife at 90% reliability is the usual basis for bearing selection.

Series S200 and SS200 are extended on one side only for compactness and low cost. In combination with its companion line of economically designed housings, this series is applicable to light or moderate duty requirements. Also, economically designed housings must be applied within proportionate load limits.

To assure a satisfactory bearing application, fitting practice, mounting, lubrication, sealing, static rating, housing strength, operating conditions and maintenance must be considered.

Steps for Selection

Step 1

Determine an appropriate L_{10} design life.

Type of service	Operating time, hours per year	Design life, years	L_{10} design life, hours
Light seasonal usage	500 to 750	3-5	3,000
Heavy seasonal usage	1,400 to 1,600	4-6	8,000
Industrial—8 hour shift	2,000	10	20,000

Step 2

Determine a required $\left(\frac{C}{P}\right)$ from Table 1.

Step 3

Calculate the required C and select a ball bearing.

a For radial load only:

$P = F_r$

required $C = \left(\frac{C}{P}\right)P$ using $\left(\frac{C}{P}\right)$ from Step 2

Select a ball bearing from Table 3 with a basic load rating C equal to or greater than the required C.

b For combined radial and thrust loads when $\frac{F_a}{F_r}$ is 0.19 or less:

$P = F_r$

required $C = \left(\frac{C}{P}\right)P$ using $\left(\frac{C}{P}\right)$ from Step 2

Select a ball bearing from Table 3 with a basic load rating C equal to or greater than the required C.

Step 3 (continued)

c For combined radial and thrust loads when $\frac{F_a}{F_r}$ is greater than 0.19, use the following trial method:

Maximum $P = .56F_r + 2.30F_a$

Maximum required $C = \left(\frac{C}{P}\right)P$ using $\left(\frac{C}{P}\right)$ from Step 2

Select a trial ball bearing with a basic load rating C from Table 3 approximately equal to the maximum required C.

With this trial bearing calculate: $\frac{F_a}{Nd^2}$

Determine X and Y from Table 2.

Calculate P for the trial bearing.

$P = XF_r + YF_a$

required $C = \left(\frac{C}{P}\right)P$ for the trial bearing using $\left(\frac{C}{P}\right)$ from Step 2

Consult Table 3, basic load rating. If a smaller bearing meets or nearly meets the required C, its life expectancy can be calculated.

Note: If the load P is greater than .15C for series S200 and SS200, consult Rexnord Bearing Products.

Selection

Symbols for formulas:

C = basic load rating, pounds (or newtons)
Co = static load rating, pounds (or newtons)
e = a reference value
F_a = thrust load, pounds (or newtons)
F_r = radial load, pounds (or newtons)
L_{10} = rating life, hours
n = speed, revolutions per minute
P = equivalent radial load, pounds (or newtons)
X = radial factor
Y = thrust factor

Table 1 • Relation of L10 life and speed to $\left(\frac{C}{P}\right)$

Bearing life, hours L_{10}	$\left(\frac{C}{P}\right)$ ratio								
	Speed, n								
	50	100	200	300	400	500	600	700	800
3000	2.08	2.62	3.30	3.77	4.15	4.47	4.75	5.01	5.23
4000	2.29	2.88	3.63	4.15	4.57	4.92	5.23	5.51	5.76
5000	2.46	3.10	3.91	4.47	4.92	5.30	5.64	5.93	6.20
6000	2.62	3.30	4.15	4.75	5.23	5.64	5.99	6.30	6.59
8000	2.88	3.63	4.57	5.23	5.76	6.20	6.59	6.94	7.25
10000	3.10	3.91	4.92	5.64	6.20	6.68	7.10	7.47	7.81
12000	3.30	4.15	5.23	5.99	6.59	7.10	7.54	7.94	8.30
14000	3.47	4.37	5.51	6.30	6.94	7.47	7.94	8.36	8.74
16000	3.63	4.57	5.76	6.59	7.25	7.81	8.30	8.74	9.14
18000	3.77	4.75	5.99	6.86	7.54	8.13	8.63	9.09	9.50
20000	3.91	4.92	6.20	7.10	7.81	8.42	8.94	9.41	9.84
25000	4.21	5.30	6.68	7.65	8.42	9.07	9.63	10.1	10.6
30000	4.47	5.64	7.10	8.13	8.94	9.63	10.2	10.8	11.3
35000	4.71	5.93	7.47	8.55	9.41	10.1	10.8	11.3	11.9
40000	4.92	6.20	7.81	8.94	9.84	10.6	11.3	11.9	12.4
45000	5.12	6.45	8.13	9.30	10.2	11.0	11.7	12.3	12.9
50000	5.30	6.68	8.42	9.63	10.6	11.4	12.1	12.8	13.4
60000	5.64	7.10	8.94	10.2	11.3	12.1	12.9	13.6	14.2
70000	5.93	7.47	9.41	10.8	11.9	12.8	13.6	14.3	14.9
80000	6.20	7.81	9.84	11.3	12.4	13.4	14.2	14.9	15.6
90000	6.45	8.13	10.2	11.7	12.9	13.9	14.8	15.5	16.2
100000	6.68	8.42	10.6	12.1	13.4	14.4	15.3	16.1	16.8
150000	7.65	9.63	12.1	13.9	15.3	16.5	17.5	18.4	19.3
200000	8.42	10.6	13.4	15.3	16.8	18.1	19.3	20.3	21.2
	Speed, n								
	900	1000	1200	1500	1800	2400	3600	6000	10000
3000	5.44	5.64	5.99	6.45	6.86	7.54	8.63	10.2	12.1
4000	5.99	6.20	6.59	7.10	7.54	8.30	9.50	11.3	13.4
5000	6.45	6.68	7.10	7.65	8.13	8.94	10.2	12.1	14.4
6000	6.86	7.10	7.54	8.13	8.63	9.50	10.9	12.9	15.3
8000	7.54	7.81	8.30	8.94	9.50	10.5	12.0	14.2	16.8
10000	8.13	8.42	8.94	9.63	10.2	11.3	12.9	15.3	18.1
12000	8.63	8.94	9.50	10.2	10.9	12.0	13.7	16.2	19.3
14000	9.09	9.41	10.0	10.8	11.4	12.6	14.4	17.1	20.3
16000	9.50	9.84	10.5	11.3	12.0	13.2	15.1	17.9	21.2
18000	9.88	10.2	10.9	11.7	12.4	13.7	15.7	18.6	22.0
20000	10.2	10.6	11.3	12.1	12.9	14.2	16.2	19.3	22.8
25000	11.0	11.4	12.1	13.1	13.9	15.3	17.5	20.7	24.6
30000	11.7	12.1	12.9	13.9	14.8	16.2	18.6	22.0	26.1
35000	12.3	12.8	13.6	14.6	15.5	17.1	19.6	23.2	27.5
40000	12.9	13.4	14.2	15.3	16.2	17.9	20.5	24.3	28.7
45000	13.4	13.9	14.8	15.9	16.9	18.6	21.3	25.2	29.9
50000	13.9	14.4	15.3	16.5	17.5	19.3	22.0	26.1	31.0
60000	14.8	15.3	16.2	17.5	18.6	20.5	23.4	27.8	32.9
70000	15.5	16.1	17.1	18.4	19.6	21.5	24.6	29.2	34.6
80000	16.2	16.8	17.9	19.3	20.5	22.5	25.8	30.5	36.2
90000	16.9	17.5	18.6	20.0	21.3	23.4	26.8	31.8	37.7
100000	17.5	18.1	19.3	20.7	22.0	24.3	27.8	32.9	39.0
150000	20.0	20.7	22.0	23.7	25.2	27.8	31.8	37.7	44.6
200000	22.0	22.8	24.3	26.1	27.8	30.5	35.0	41.4	49.1

Basic formula

$$\left(\frac{C}{P}\right) = \left(\frac{L_{10} \times n \times 60}{1{,}000{,}000}\right)^{1/3}$$

$$L_{10} = \frac{\left(\frac{C}{P}\right)^3 \times 1{,}000{,}000}{n \times 60}$$

Life Expectancy

To calculate the Rating Life L_{10} of any selected or trial bearing:

Step 1 Determine the equivalent radial load P.

a For radial load only:
$P = F_r$

b For combined radial and thrust load:
$P = XF_r + YF_a$ using X and Y from Table 2 below.

Step 2 Calculate the ratio of basic load rating C to the equivalent radial load.
$\left(\frac{C}{P}\right)$

Step 3 Approximate the bearing life from Table 1.

Table 2 • X and Y factors for ball bearings

$\frac{F_a}{Nd^2}$	e	$\frac{F_a}{F_r} \le e$		$\frac{F_a}{F_r} > e$	
		X	Y	X	Y
25	.19	1.0	0	.56	2.30
37.5	.21	1.0	0	.56	2.15
50	.22	1.0	0	.56	1.99
75	.24	1.0	0	.56	1.85
100	.26	1.0	0	.56	1.71
125	.27	1.0	0	.56	1.63
150	.28	1.0	0	.56	1.56
200	.30	1.0	0	.56	1.45
300	.34	1.0	0	.56	1.31
500	.38	1.0	0	.56	1.15
750	.42	1.0	0	.56	1.04
1000	.44	1.0	0	.56	1.00

For values between those in the table linear interpolation can be used.

Life Adjustment

The Rating Life, L_{10}, may be modified for some applications in accordance with the formula

$$L'_n = a_1 a_2 a_3 L_{10}$$

where L'_n = Adjusted life for (100-n) % reliablility,

a_1 = Life adjustment factor for reliability

a_2 = Life adjustment factor for material and processing

a_3 = Life adjustment factor for operating conditions.

For most normal applications, all factors will be taken as 1, and the Rating Life used as the selection basis or life estimate. In addition, as long as standard catalog bearings are used, *a2* will be normally set equal to one. The factor *a3* covers such things as lubrication, misalignment, and temperature. Some conditions that could yield *a3* significantly different than unity include speeds less than 20000 DN or greater than 200000 DN, temperatures below –40°F *(–40°C)* or above 275°F *(135°C)*. For other possible conditions, as well as additional information on life adjustment factors, consult Rexnord Bearing Products.

Table 3 • Load ratings, speed limits and ball data

Size Code	C Basic Load Rating		Co Static Load Rating		Approximate Speed Limit RPM*	d Ball diameter inches	N Number of balls	Nd^2
	pounds	newtons	pounds	newtons				
204	2870	*12,800*	1480	*6,590*	7500	5/16	8	.781
205	3150	*14,000*	1760	*7,830*	6800	5/16	9	.879
206	4390	*19,500*	2530	*11,300*	5600	3/8	9	1.27
207	5810	*25,800*	3440	*15,300*	4800	7/16	9	1.72
208	7330	*32,600*	4460	*19,900*	4500	1/2	9	2.25
209	7370	*32,800*	4590	*20,400*	4000	1/2	9	2.25
210	7920	*35,200*	5220	*23,200*	3600	1/2	10	2.50

If the load P is greater than 15% of C rating for S200 and SS200, consult Rexnord Bearing Products.

For S200 and SS200 Series, reduce C Basic Load Rating by 23%.

*Based on grease lubrication and moderate load.

Table 4 • Radial load ratings in pounds at various RPM for appropriate L10 life hours

Size Code	L10 Minimum life, hours	Radial Load Ratings, Pounds/Speed, RPM																			
		50	100	200	300	400	500	600	700	800	900	1000	1200	1500	1800	2000	2500	3000	3500	4000	5000
	8000	996	791	627	548	498	462	435	413	395	380	367	345	321	302	291	270	254	242	231	215
204	20000	734	582	462	404	367	341	321	304	291	280	270	254	236	222	215	199	187	178	170	158
	40000	582	462	367	321	291	270	254	242	231	222	215	202	187	176	170	158	149	141	135	125
	100000	429	341	270	236	215	199	187	178	170	164	158	149	138	130	125	116	110	104	100	92
	8000	1095	869	690	603	548	508	478	454	435	418	403	380	352	332	320	297	280	266	254	236
205	20000	807	640	508	444	403	375	352	335	320	308	297	280	260	244	236	219	206	196	187	174
	40000	640	508	403	352	320	297	280	266	254	244	236	222	206	194	187	174	164	155	149	138
	100000	472	375	297	260	236	219	206	196	187	180	174	164	152	143	138	128	121	115	110	102
	8000	1523	1209	960	838	762	707	665	632	605	581	561	528	490	461	445	413	389	370	354	328
206	20000	1122	891	707	618	561	521	490	466	445	428	413	389	361	340	328	305	287	272	260	242
	40000	891	707	561	490	445	413	389	370	354	340	328	309	287	270	260	242	228	216	207	192
	100000	656	521	413	361	328	305	287	272	260	250	242	228	211	199	192	178	168	159	152	141
	8000	2015	1599	1269	1109	1007	935	880	836	799	769	742	698	648	610	589	547	515	489	468	434
207	20000	1484	1178	935	817	742	689	648	616	589	566	547	515	478	450	434	403	379	360	344	320
	40000	1178	935	742	648	589	547	515	489	468	450	434	408	379	357	344	320	301	286	273	254
	100000	868	689	547	478	434	403	379	360	344	331	320	301	279	263	254	236	222	211	201	187
	8000	2542	2017	1601	1399	1271	1180	1110	1055	1009	970	936	881	818	770	743	690	649	617	590	548
208	20000	1873	1486	1180	1031	936	869	818	777	743	715	690	649	603	567	548	508	478	454	435	403
	40000	1486	1180	936	818	743	690	649	617	590	567	548	515	478	450	435	403	380	361	345	320
	100000	1095	869	690	603	548	508	478	454	435	418	403	380	352	332	320	297	280	266	254	236
	8000	2555	2028	1610	1406	1278	1186	1116	1060	1014	975	941	886	822	774	747	694	653	620	593	551
209	20000	1883	1494	1186	1036	941	874	822	781	747	718	694	653	606	570	551	511	481	457	437	406
	40000	1494	1186	941	822	747	694	653	620	593	570	551	518	481	453	437	406	382	363	347	322
	100000	1101	874	694	606	551	511	481	457	437	420	406	382	354	333	322	299	281	267	256	237
	8000	2745	2178	1729	1510	1372	1274	1199	1139	1089	1047	1011	952	883	831	803	745	701	666	637	
210	20000	2022	1605	1274	1113	1011	939	883	839	803	772	745	701	651	612	591	549	517	491	469	
	40000	1605	1274	1011	883	803	745	701	666	637	612	591	556	517	486	469	436	410	389	373	
	100000	1183	939	745	651	591	549	517	491	469	451	436	410	381	358	346	321	302	287	274	

Operation in the high speed shaded areas requires frequent relubrication.

Heavy lines define recommended speed ranges of bearing and seal variations.

If the load P is greater than 15% of C rating for S200 and SS200, consult Rexnord Bearing Products.

KLPSS200

Interchange: *P2BSCEZ, SUCP200-PBT, KAS*

Photo Shows a 2-Bolt Ball Bearing Pillow Block Unit with Stainless Steel Insert and Polypropylene Housing

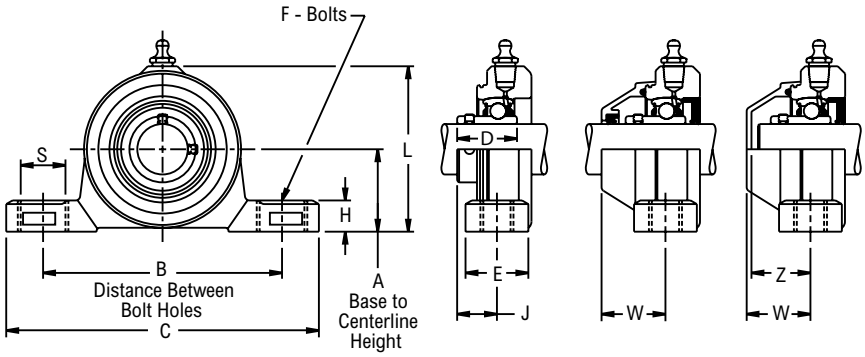

Basic Unit — KLP-SS200

Open Unit with Auxillary Seals — KLP-SS200D

Closed Unit with End Cap and Seal — KLP-SS200DC

Product Features

- Reinforced Polypropylene housing
- Stainless steel bearing insert
- Stainless steel bushing & washers
- Alignable & relubricatable
- Spring locking setscrew mount
- Prelubricated with food grade grease
- See Features and Benefits for additional info on page 454.

Bearing Dimensions

Size Code	Shaft Diameter	Polypropylene Part Number	A Base to Centerline Height	B Distance Between Bolt Holes	C	D	E	F Bolts	H	J	L	S	W	Z	Approx. Weight
204	3/4	KLPSS212	1 5/16	3 25/32	5 1/32	1 1/8	1 3/16	3/8	43/64	3/4	3 1/32	7/8	1 7/32	1 1/8	1.50
	20.00	*KLPSS2M20*	*33.30*	*96.00*	*128.00*	*28.58*	*30.00*	*10.00*	*17.00*	*19.00*	*77.00*	*22.00*	*30.80*	*28.80*	*0.68*
205	1	KLPSS216	1 7/16	4 11/64	5 31/64	1 3/16	1 23/64	3/8	43/64	13/16	3 11/32	7/8	1 9/32	1 13/64	1.80
	25.00	*KLPSS2M25*	*36.50*	*106.00*	*140.00*	*30.17*	*34.50*	*10.00*	*17.00*	*20.60*	*85.00*	*22.00*	*32.70*	*30.70*	*0.80*
206	1 3/16	KLPSS219	1 11/16	4 49/64	6 27/64	1 11/32	1 27/64	1/2	25/32	61/64	3 55/64	15/16	1 3/8	1 19/64	1.80
	1 1/4	KLPSS2E20													
	30.00	*KLPSS2M30*	*42.90*	*121.00*	*163.00*	*34.13*	*36.00*	*12.00*	*20.00*	*24.20*	*98.00*	*24.00*	*35.00*	*33.00*	*0.80*
207	1 1/4	KLPSS220	1 7/8	4 31/32	6 37/64	1 9/16	1 33/64	1/2	25/32	1 7/64	4 1/4	15/16	1 9/16	1 15/32	2.00
	1 3/8	KLPSS222													
	1 7/16	KLPSS223													
	35.00	*KLPSS2M35*	*47.60*	*126.00*	*167.00*	*39.67*	*38.60*	*12.00*	*20.00*	*28.20*	*108.00*	*24.00*	*39.50*	*37.50*	*0.90*
208	1 1/2	KLPSS224	2	5 11/32	7 9/32	1 11/16	1 33/64	1/2	25/32	1 13/64	4 13/32	15/16	1 41/64	1 9/16	2.20
	40.00	*KLPSS2M40*	*50.80*	*136.00*	*185.00*	*42.87*	*38.60*	*12.00*	*20.00*	*30.60*	*112.00*	*24.00*	*41.60*	*39.60*	*1.00*

Additional Notes

- Please call 1-866-REXNORD for availability
- Lubrication fitting tap size, Rp 1/8" parallel thread per ISO 7/1 latest revision
- Note: 1/8" PT external thread will not fit
- Polypropylene housings furnished with nitrile rubber seals, o-ring & AISI 316 stainless steel bushings and washers
- For the Selection Guide, Load Ratings and Speed Limits, see the Klean-Gard & Dura-Klean Ball Bearings Engineering section on pages 456 - 458.

Note: Dimensions subject to change. Certified dimensions of ordered material furnished on request.

KLFXSS200

Interchange: *F2BSCEZ, SUCFT200-PBT, KCJT*

Photo Shows a 2-Bolt Ball Bearing Flanged Unit with Stainless Steel Insert and Polypropylene Housing

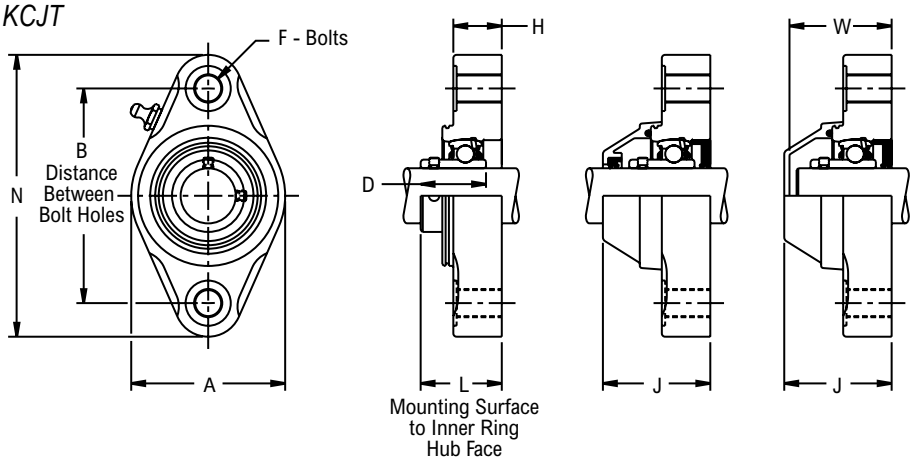

Product Features

- Reinforced Polypropylene housing
- Stainless steel bearing insert
- Stainless steel bushing & washers
- Spring locking setscrew mount
- Alignable & relubricatable
- Prelubricated with food grade grease
- See Features and Benefits for additional info on page 454.

Bearing Dimensions

Size Code	Shaft Diameter	Polypropylene Part Number	B Distance Between Bolt Holes	L Mounting Surface to Inner Ring Hub Face	A	D	F Bolts	H	J	N	W	Approx. Weight
204	3/4	KLFXSS212	3.54	1 23/64	2 7/16	1 1/8	7/16	51/64	1 13/16	4 9/16	1 11/16	0.90
	20.00	*KLFXSS2M20*	*90.00*	*34.30*	*62.00*	*28.58*	*11.00*	*20.00*	*46.00*	*116.00*	*43.00*	*0.41*
205	1	KLFXSS216	3.90	1 15/32	2 13/16	1 3/16	7/16	7/8	1 61/64	5 1/8	1 7/8	1.00
	25.00	*KLFXSS2M25*	*99.00*	*37.30*	*71.00*	*30.17*	*11.00*	*22.50*	*49.50*	*130.00*	*47.50*	*0.45*
206	1 3/16	KLFXSS219	4.61	1 3/4	3 11/32	1 11/32	7/16	1 1/64	2 11/64	5 53/64	2 3/32	1.25
	1 1/4	KLFXSS2E20										
	30.00	*KLFXSS2M30*	*117.00*	*44.20*	*85.00*	*34.13*	*11.00*	*26.00*	*55.00*	*148.00*	*53.00*	*0.56*
207	1 1/4	KLFXSS220	5.12	1 7/8	3 21/32	1 9/16	7/16	1 1/64	2 21/64	6 3/8	2 1/4	1.50
	1 3/8	KLFXSS222										
	1 7/16	KLFXSS223										
	35.00	*KLFXSS2M35*	*130.00*	*47.70*	*93.00*	*39.67*	*11.00*	*26.00*	*59.00*	*162.00*	*57.00*	*0.68*
208	1 1/2	KLFXSS224	5.67	2 1/16	4 1/64	1 11/16	7/16	1 3/16	2 37/64	6 59/64	2 15/32	2.00
	40.00	*KLFXSS2M40*	*144.00*	*52.40*	*102.00*	*42.87*	*11.00*	*30.00*	*65.50*	*176.00*	*62.50*	*0.90*

Additional Notes

- Please call 1-866-REXNORD for availability
- Lubrication fitting tap size, Rp 1/8" parallel thread per ISO 7/1 latest revision
- Note: 1/8" PT external thread will not fit
- Polypropylene housings furnished with nitrile rubber seals, o-ring & AISI 316 stainless steel bushings and washers

For the Selection Guide, Load Ratings and Speed Limits, see the Klean-Gard & Dura-Klean Ball Bearings Engineering section on pages 456 - 458.

Note: Dimensions subject to change. Certified dimensions of ordered material furnished on request.

KLFSS200

Interchange: *F4BSCEZ, SUCF200-PBT, KCJ*

Photo Shows a 4-Bolt Ball Bearing Flanged Unit with Stainless Steel Insert and Polypropylene Housing

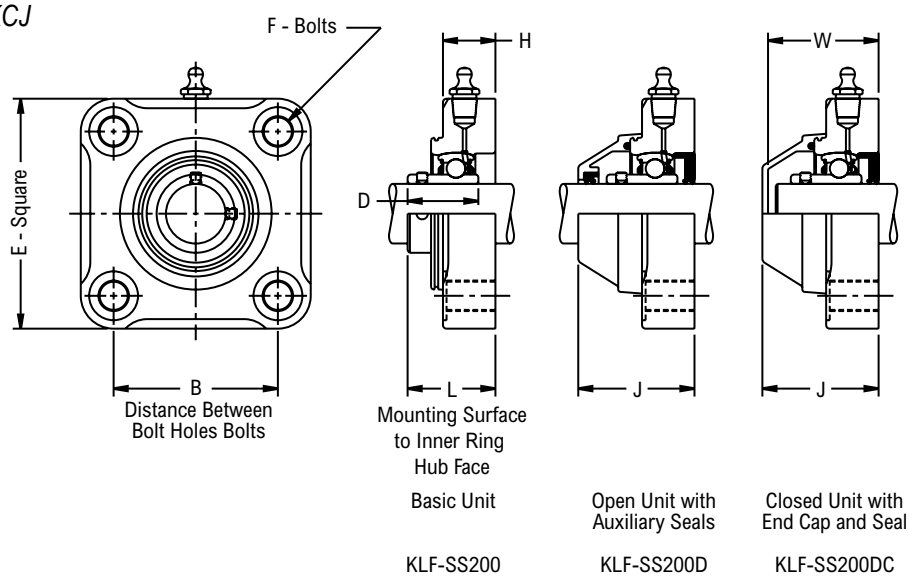

Product Features

- Reinforced Polypropylene housing
- Stainless steel bearing insert
- Stainless steel bushing & washers
- Spring locking setscrew mount
- Alignable & relubricatable
- Prelubricated with food grade grease
- See Features and Benefits for additional info on page 454.

Bearing Dimensions

Size Code	Shaft Diameter	Polypropylene Part Number	B Distance Between Bolt Holes	L Mounting Surface to Inner Ring Hub Face	D	E	F Bolts	H	J	W	Approx. Weight
205	1	KLFSS216	2.76	1 15/32	1 3/16	3 55/64	7/16	7/8	1 61/64	1 7/8	0.90
	25.00	*KLFSS2M25*	*70.00*	*37.30*	*30.17*	*98.00*	*11.00*	*22.50*	*49.50*	*47.50*	*0.41*
206	1 3/16	KLFSS219	3.27	1 3/4	1 11/32	4 21/64	7/16	1 1/64	2 11/64	2 3/32	1.40
	1 1/4	KLFSS2E20									
	30.00	*KLFSS2M30*	*83.00*	*44.20*	*34.13*	*110.00*	*11.00*	*26.00*	*55.00*	*53.00*	*0.63*
207	1 1/4	KLFSS220	3.62	1 7/8	1 9/16	4 23/32	7/16	1 1/64	2 21/64	2 1/4	1.90
	1 3/8	KLFSS222									
	1 7/16	KLFSS223									
	35.00	*KLFSS2M35*	*92.00*	*47.70*	*39.67*	*120.00*	*11.00*	*26.00*	*59.00*	*57.00*	*0.86*
208	1 1/2	KLFSS224	4.02	2 1/16	1 11/16	5 5/32	7/16	1 3/16	2 37/64	2 15/32	2.50
	40.00	*KLFSS2M40*	*102.00*	*52.40*	*42.87*	*131.00*	*11.00*	*30.00*	*65.50*	*62.50*	*1.13*

Additional Notes

- Please call 1-866-REXNORD for availability
- Lubrication fitting tap size, Rp 1/8" parallel thread per ISO 7/1 latest revision
- Note: 1/8" PT external thread will not fit
- Polypropylene housings furnished with nitrile rubber seals, o-ring & AISI 316 stainless steel bushings and washers
- For the Selection Guide, Load Ratings and Speed Limits, see the Klean-Gard & Dura-Klean Ball Bearings Engineering section on pages 456 - 458.
- Note: Dimensions subject to change. Certified dimensions of ordered material furnished on request.

KLFBSS200

Interchange: *FBSCEZ, SUCFB200-PBT*

Photo Shows a 3-Bolt Ball Bearing Flanged Bracket Unit with Stainless Steel Insert and Polypropylene Housing

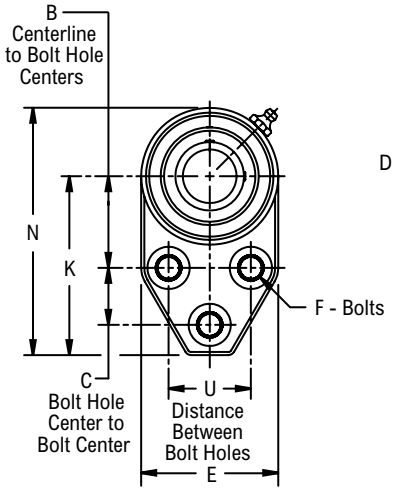

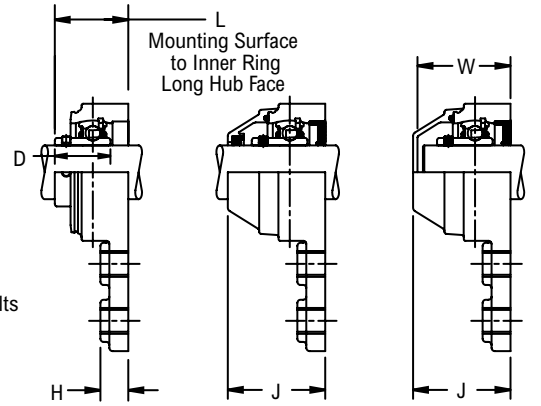

Basic Unit	Open Unit with Auxillary Seals	Closed Unit with End Cap and Seal
KLFB-SS200	KLFB-SS200D	KLFB-SS200DC

Product Features

- Reinforced Polypropylene housing
- Stainless steel bearing insert
- Stainless steel bushing & washers
- Spring locking setscrew mount
- Alignable & relubricatable
- Prelubricated with food grade grease
- See Features and Benefits for additional info on page 454.

Bearing Dimensions

Size Code	Shaft Diameter	Polypropylene Part Number	B Centerline to Bolt Hole Center	C Bolt Hole Center to Bolt Center	L Mounting Surface to Inner Ring	U Distance Between Bolt Holes	D	E	F Bolts	H	J	K	N	W	Approx. Weight
205	1	KLFBSS216	1 13/16	1 1/8	1 17/32	1 5/8	1 3/16	2 23/32	7/16	9/16	2 1/64	3 17/32	4 57/64	1 15/16	0.60
	25.00	*KLFBSS2M25*	*46.00*	*28.58*	*38.90*	*41.28*	*30.17*	*69.00*	*11.00*	*14.00*	*51.20*	*89.80*	*124.00*	*49.20*	*0.27*
206	1 3/16	KLFBSS219	2 1/16	1 1/4	1 3/4	1 7/8	1 11/32	3 13/64	7/16	9/16	2 11/64	3 55/64	5 15/32	2 3/32	1.10
	1 1/4	KLFBSS2E20													
	30.00	*KLFBSS2M30*	*52.40*	*31.70*	*44.20*	*47.60*	*34.13*	*81.00*	*11.00*	*14.00*	*55.20*	*97.90*	*139.00*	*53.20*	*0.50*
207	1 1/4	KLFBSS220	2 3/8	1 1/4	1 7/8	2	1 9/16	3 11/16	7/16	9/16	2 21/64	4 15/64	6 5/64	2 1/4	1.60
	1 3/8	KLFBSS222													
	1 7/16	KLFBSS223													
	35.00	*KLFBSS2M35*	*60.30*	*31.70*	*47.70*	*50.80*	*39.67*	*94.00*	*11.00*	*14.00*	*59.10*	*107.60*	*154.00*	*57.20*	*0.72*

Additional Notes

- Please call 1-866-REXNORD for availability
- Lubrication fitting tap size, Rp 1/8" parallel thread per ISO 7/1 latest revision
- Note: 1/8" PT external thread will not fit
- Polypropylene housings furnished with nitrile rubber seals, o-ring & AISI 316 stainless steel bushings and washers

For the Selection Guide, Load Ratings and Speed Limits, see the Klean-Gard & Dura-Klean Ball Bearings Engineering section on pages 456 - 458.

Note: Dimensions subject to change. Certified dimensions of ordered material furnished on request.

WP3S200

Photo Shows a 2-Bolt Ball Bearing Pillow Block Unit with Nylon Coated Housing

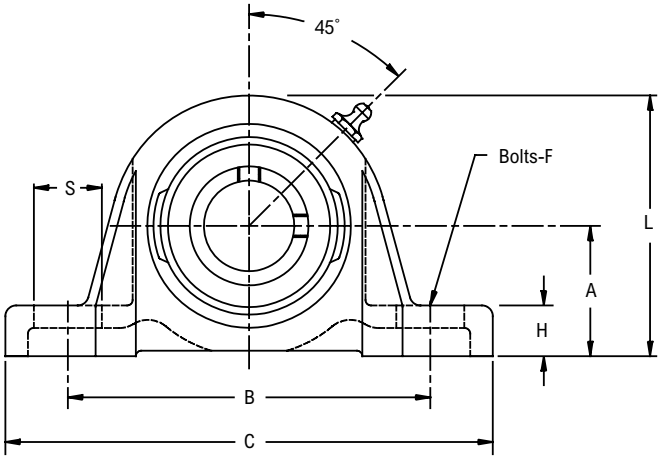

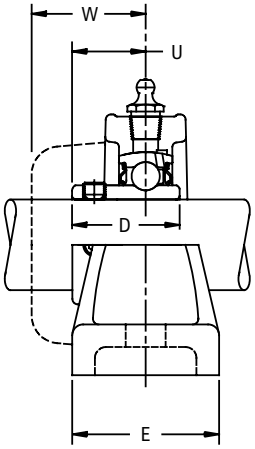

Product Features

- Corrosion resistant nylon coating
- Cast iron housing
- Inner & outer rings black oxide coated
- Spring locking setscrew mount
- Alignable & relubricatable
- Prelubricated with food grade grease
- See Features and Benefits for additional info on page 454.

Bearing Dimensions

Size Code	Shaft Diameter	Part Number	A Base to Centerline Height	B Distance Between Bolt Holes	C	D	E	F Bolts	H	L	S	U	W	Approx. Weight
204	3/4	WP3S212E	1 5/16	3 7/8	5 1/8	1 1/8	1 1/2	3/8	1/2	2 19/32	11/16	3/4	1 19/64	1.60
	20.00	*WP3S2M20E*	*33.34*	*98.40*	*130.20*	*28.58*	*38.10*	*10.00*	*12.70*	*65.90*	*17.50*	*19.00*	*32.90*	*0.72*
205	7/8	WP3S214E	1 7/16	4	5 3/8	1 11/64	1 5/8	3/8	9/16	2 7/8	11/16	13/16	1 9/32	1.90
	15/16	WP3S215E												
	1	WP3S216E												
	25.00	*WP3S2M25E*	*36.51*	*101.60*	*136.50*	*30.17*	*41.30*	*10.00*	*14.30*	*73.00*	*17.50*	*20.60*	*32.50*	*0.86*
206	1 1/8	WP3S218E	1 11/16	4 5/8	6 5/16	1 11/32	1 3/4	1/2	11/16	3 5/16	15/16	61/64	1 29/64	2.80
	1 3/16	WP3S219E												
	1 1/4	WP3S2E20E												
	30.00	*WP3S2M30E*	*42.86*	*117.50*	*160.30*	*34.13*	*44.40*	*12.00*	*17.50*	*84.10*	*23.80*	*24.20*	*36.90*	*1.26*
207	1 1/4	WP3S220E	1 7/8	4 15/16	6 3/8	1 9/16	1 7/8	1/2	13/16	3 11/16	13/16	1 7/64	1 35/64	3.50
	1 3/8	WP3S222E												
	1 7/16	WP3S223E												
	35.00	*WP3S2M35E*	*47.62*	*125.40*	*161.90*	*39.67*	*47.60*	*12.00*	*20.60*	*93.70*	*20.60*	*28.20*	*39.30*	*1.58*
208	1 1/2	WP3S224E	2	5 3/8	7 1/16	1 11/16	1 7/8	1/2	13/16	4	15/16	1 13/64	1 41/64	4.40
	40.00	*WP3S2M40E*	*50.80*	*136.50*	*179.40*	*42.87*	*47.60*	*12.00*	*20.60*	*101.60*	*23.80*	*30.60*	*41.70*	*1.98*
209	1 5/8	WP3S226E	2 1/8	5 5/8	7 1/4	1 49/64	2	1/2	13/16	4 5/16	7/8	1 15/64	1 21/32	5.50
	1 11/16	WP3S227E												
	1 3/4	WP3S228E												
210	1 15/16	WP3S231E	2 1/4	6 3/16	7 7/8	1 51/64	2 1/8	5/8	7/8	4 1/2	15/16	1 17/64	1 25/32	5.80

Additional Notes

Please call 1-866-REXNORD for availability

Lubrication fitting tap size, 1/8" PT

Base to centerline tolerance, +.000 in/-.010 in *(+0.00 mm/-0.25 mm)*

For the Selection Guide, Load Ratings and Speed Limits, see the Klean-Gard & Dura-Klean Ball Bearings Engineering section on pages 456 - 458.

Note: Dimensions subject to change. Certified dimensions of ordered material furnished on request.

WPT3S200

Photo Shows a 2-Bolt Ball Bearing Tapped Base Pillow Block with Nylon Coated Housing

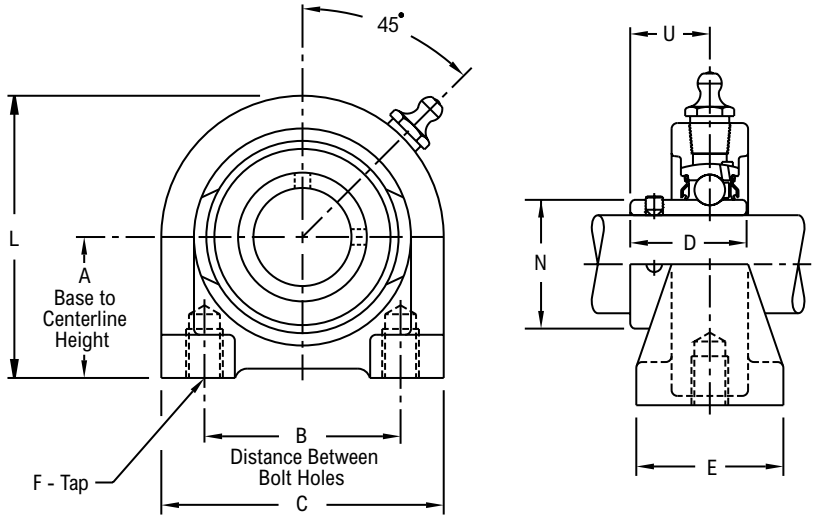

Product Features

- Corrosion resistant nylon coating
- Cast iron tapped base housing
- Inner & outer rings black oxide coated
- Spring locking setscrew mount
- Alignable & relubricatable
- Prelubricated with food grade grease
- See Features and Benefits for additional info on page 454.

Bearing Dimensions

Size Code	Shaft Diameter	Part Number	A Base to Centerline Height	B Distance Between Bolt Holes	C	D	E	F Depth	F Tap	L	N	U	Approx. Weight
204	3/4	WPT3S212E	1 5/16	2	2 7/8	1 1/8	1 1/2	1/2	3/8-16	2 19/32	1 1/8	3/4	1.30
	20.00	*WPT3S2M20E*	*33.34*	*50.80*	*73.00*	*28.58*	*38.10*	*12.70*	*3/8-16*	*65.90*	*28.600*	*19.00*	*0.59*
205	7/8	WPT3S214E	1 7/16	2	2 7/8	1 11/64	1 1/2	1/2	3/8-16	2 7/8	1 5/16	51/64	1.50
	15/16	WPT3S215E											
	1	WPT3S216E											
	25.00	*WPT3S2M25E*	*36.51*	*50.80*	*73.00*	*29.77*	*38.10*	*12.70*	*3/8-16*	*73.00*	*33.300*	*20.20*	*0.68*
206	1 1/8	WPT3S218E	1 11/16	3	4	1 11/32	1 1/2	5/8	7/16-14	3 5/16	1 19/32	61/64	2.50
	1 3/16	WPT3S219E											
	1 1/4	WPT3S2E20E											
	30.00	*WPT3S2M30E*	*42.86*	*76.20*	*101.60*	*34.13*	*38.10*	*15.90*	*7/16-14*	*84.10*	*40.500*	*24.20*	*1.13*
207	1 1/4	WPT3S220E	1 7/8	3 1/4	4 13/32	1 9/16	1 7/8	3/4	1/2-13	3 11/16	1 27/32	1 7/64	3.60
	1 3/8	WPT3S222E											
	1 7/16	WPT3S223E											
	35.00	*WPT3S2M35E*	*47.62*	*82.55*	*111.90*	*39.67*	*47.60*	*19.00*	*1/2-13*	*93.70*	*46.900*	*28.20*	*1.62*
210	1 15/16	WPT3S231E	2 1/4	4	5 7/16	1 13/16	2	7/8	5/8-11	4 1/2	2 15/32	1 17/64	5.70

Additional Notes

- Please call 1-866-REXNORD for availability
- Lubrication fitting tap size, 1/8" PT
- Base to centerline tolerance, +.000 in/-.010 in *(+0.00 mm/-0.25 mm)*
- For the Selection Guide, Load Ratings and Speed Limits, see the Klean-Gard & Dura-Klean Ball Bearings Engineering section on pages 456 - 458.

Note: Dimensions subject to change. Certified dimensions of ordered material furnished on request.

WFX3S200

Photo Shows a 2-Bolt Ball Bearing Flanged Unit with Nylon Coated Housing

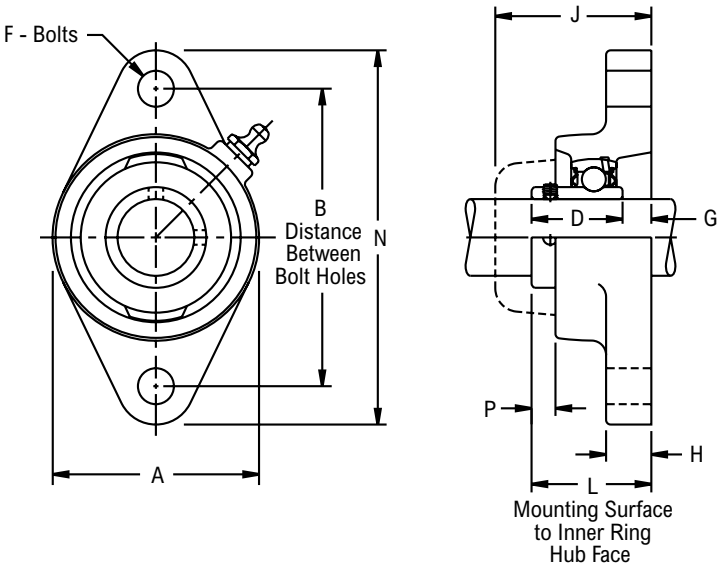

Product Features

- Corrosion resistant nylon coating
- Cast iron housing
- Inner & outer rings black oxide coated
- Spring locking setscrew mount
- Alignable & relubricatable
- Prelubricated with food grade grease
- See Features and Benefits for additional info on page 454.

Bearing Dimensions

Size Code	Shaft Diameter	Part Number	B Distance Between Bolt Holes	L Mounting Surface to Inner Ring Hub Face	A	D	F Bolts	G	H	J	N	P	Approx. Weight
204	3/4	WFX3S212E	3 17/32	1 31/64	2 7/16	1 1/8	3/8	23/64	9/16	2 1/64	4 13/32	9/32	1.10
	20.00	*WFX3S2M20E*	*89.69*	*37.70*	*61.90*	*28.58*	*10.00*	*9.10*	*14.30*	*51.20*	*111.90*	*7.10*	*0.50*
205	7/8	WFX3S214E	3 57/64	1 35/64	2 11/16	1 11/64	7/16	3/8	19/32	2	4 29/32	19/64	1.50
	15/16	WFX3S215E											
	1	WFX3S216E											
	25.00	*WFX3S2M25E*	*98.82*	*39.30*	*68.30*	*29.77*	*10.00*	*9.50*	*15.10*	*50.80*	*124.60*	*7.50*	*0.68*
206	1 1/8	WFX3S218E	4 19/32	1 47/64	3 3/16	1 11/32	7/16	25/64	19/32	2 15/64	5 19/32	27/64	2.20
	1 3/16	WFX3S219E											
	1 1/4	WFX3S2E20E											
	30.00	*WFX3S2M30E*	*116.68*	*44.00*	*81.00*	*34.13*	*10.00*	*9.90*	*15.10*	*56.70*	*142.10*	*10.70*	*1.00*
207	1 1/4	WFX3S220E	5 1/8	1 59/64	3 5/8	1 9/16	1/2	23/64	5/8	2 23/64	6 1/8	33/64	2.70
	1 3/8	WFX3S222E											
	1 7/16	WFX3S223E											
	35.00	*WFX3S2M35E*	*130.18*	*48.80*	*92.10*	*39.69*	*12.00*	*9.10*	*15.90*	*59.90*	*155.60*	*13.10*	*1.21*
208	1 1/2	WFX3S224E	5 21/32	2 5/64	4	1 21/32	1/2	27/64	5/8	2 35/64	6 25/32	1/2	3.80
	40.00	*WFX3S2M40E*	*143.67*	*52.80*	*101.60*	*42.06*	*12.00*	*10.70*	*15.90*	*65.10*	*172.20*	*12.70*	*1.70*
209	1 5/8	WFX3S226E	5 27/32	2 9/64	4 1/4	1 49/64	1/2	3/8	5/8	2 9/16	7 3/32	35/64	4.40
	1 11/16	WFX3S227E											
	1 3/4	WFX3S228E											
210	1 15/16	WFX3S231E	6 3/16	2 25/64	4 9/16	1 13/16	9/16	37/64	3/4	2 57/64	7 7/16	35/64	5.60

Additional Notes

Please call 1-866-REXNORD for availability

Lubrication fitting tap size, 1/8" PT

For the Selection Guide, Load Ratings and Speed Limits, see the Klean-Gard & Dura-Klean Ball Bearings Engineering section on pages 456 - 458.

Note: Dimensions subject to change. Certified dimensions of ordered material furnished on request.

WF3S200

Photo Shows a 4-Bolt Ball Bearing Flanged Unit with Nylon Coated Housing

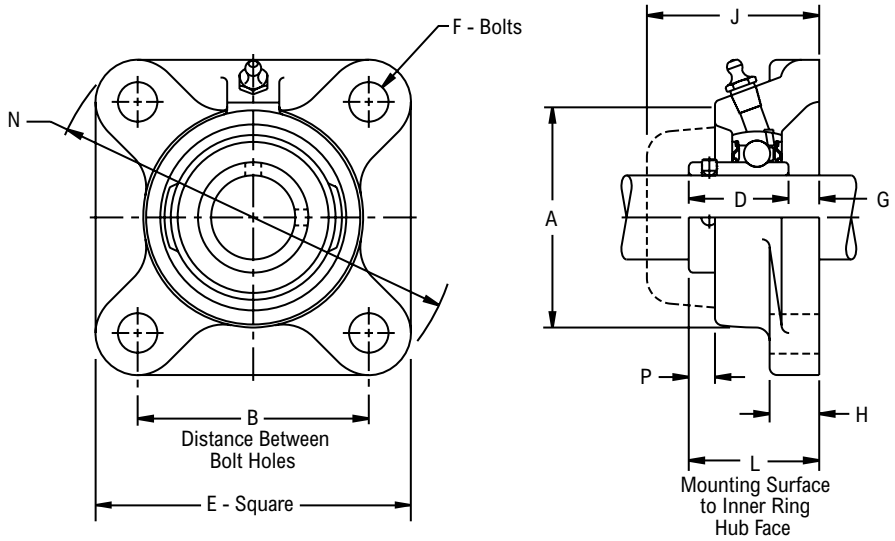

Product Features

- Corrosion resistant nylon coating
- Cast iron housing
- Inner & outer rings black oxide coated
- Spring locking setscrew mount
- Alignable & relubricatable
- Prelubricated with food grade grease
- See Features and Benefits for additional info on page 454.

Bearing Dimensions

Size Code	Shaft Diameter	Part Number	B Distance Between Bolt Holes	L Mounting Surface to Inner Ring Hub Face	A	D	E	F Bolts	G	H	J	N	P	Approx. Weight
204	3/4	WF3S212E	2 1/2	1 31/64	2 7/16	1 1/8	3 3/8	3/8	23/64	9/16	2 1/64	4 13/32	9/32	1.60
	20.00	*WF3S2M20E*	*63.50*	*37.70*	*61.90*	*28.58*	*85.70*	*10.00*	*9.10*	*14.30*	*51.20*	*111.90*	*7.10*	*0.72*
205	7/8	WF3S214E	2 3/4	1 35/64	2 11/16	1 11/64	3 3/4	7/16	3/8	19/32	2	4 29/32	19/64	1.90
	15/16	WF3S215E												
	1	WF3S216E												
	25.00	*WF3S2M25E*	*69.85*	*39.30*	*68.30*	*29.77*	*95.20*	*10.00*	*9.50*	*15.10*	*50.80*	*124.60*	*7.50*	*0.86*
206	1 1/8	WF3S218E	3 1/4	1 47/64	3 3/16	1 11/32	4 1/4	7/16	25/64	19/32	2 15/64	5 19/32	27/64	2.60
	1 3/16	WF3S219E												
	1 1/4	WF3S2E20E												
	30.00	*WF3S2M30E*	*82.55*	*44.00*	*81.00*	*34.13*	*108.00*	*10.00*	*9.90*	*15.10*	*56.70*	*142.10*	*10.70*	*1.17*
207	1 1/4	WF3S220E	3 5/8	1 59/64	3 5/8	1 9/16	4 5/8	1/2	23/64	5/8	2 23/64	6 1/8	37/64	3.40
	1 3/8	WF3S222E												
	1 7/16	WF3S223E												
	35.00	*WF3S2M35E*	*92.08*	*48.80*	*92.10*	*39.67*	*117.50*	*12.00*	*9.10*	*15.90*	*59.90*	*155.60*	*14.70*	*1.53*
208	1 1/2	WF3S224E	4	2 5/64	4	1 21/32	5 1/8	1/2	27/64	5/8	2 35/64	6 25/32	1/2	4.70
	40.00	*WF3S2M40E*	*101.60*	*52.80*	*101.60*	*42.06*	*130.20*	*12.00*	*10.70*	*15.90*	*64.70*	*172.20*	*12.70*	*2.12*
209	1 5/8	WF3S226E	4 1/8	2 9/64	4 1/4	1 49/64	5 3/8	1/2	3/8	5/8	2 9/16	7 3/32	35/64	5.40
	1 11/16	WF3S227E												
	1 3/4	WF3S228E												
210	1 15/16	WF3S231E	4 3/8	2 19/64	4 1/2	1 13/16	5 5/8	1/2	1/2	3/4	2 13/16	7 7/16	9/16	6.20

Additional Notes

- Please call 1-866-REXNORD for availability
- Lubrication fitting tap size, 1/8" PT
- For the Selection Guide, Load Ratings and Speed Limits, see the Klean-Gard & Dura-Klean Ball Bearings Engineering section on pages 456 - 458.
- Note: Dimensions subject to change. Certified dimensions of ordered material furnished on request.

WFB3S200

Photo Shows a 3-Bolt Ball Bearing Flanged Bracket Unit with Nylon Coated Housing

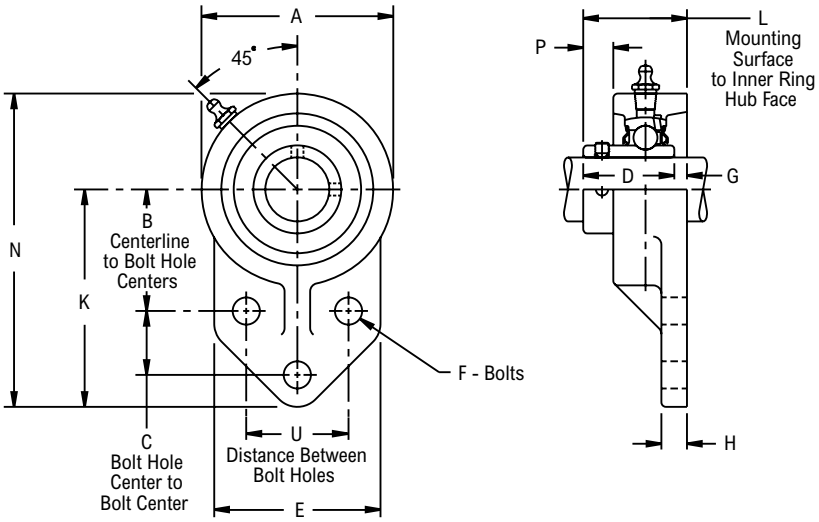

Product Features

- Corrosion resistant nylon coating
- Cast iron housing
- Inner & outer rings black oxide coated
- Spring locking setscrew mount
- Alignable & relubricatable
- Prelubricated with food grade grease
- See Features and Benefits for additional info on page 454.

Bearing Dimensions

Size Code	Shaft Diameter	Part Number	B Centerline to Bolt Hole Centers	C Bolt Hole Center to Bolt Center	L Mounting Surface to Inner Ring	U Distance Between Bolt Holes	A	D	E	F Bolts	G	H	K	N	P	Approx. Weight
204	3/4	WFB3S212E	1 11/16	7/8	1 11/32	1 1/2	2 1/2	1 1/8	2 3/8	3/8	7/32	5/16	3	4 1/4	11/32	1.20
	20.00	*WFB3S2M20E*	*42.90*	*22.20*	*34.10*	*38.10*	*63.50*	*28.58*	*60.30*	*10.00*	*5.50*	*7.90*	*76.20*	*108.00*	*8.70*	*0.54*
205	7/8	WFB3S214E	1 13/16	1 1/8	1 29/64	1 5/8	2 3/4	1 11/64	2 1/2	3/8	9/32	3/8	3 3/8	4 3/4	19/64	1.70
	15/16	WFB3S215E														
	1	WFB3S216E														
	25.00	*WFB3S2M25E*	*46.00*	*28.60*	*38.90*	*41.30*	*69.80*	*29.77*	*63.50*	*10.00*	*7.10*	*9.50*	*85.70*	*120.60*	*7.50*	*0.77*
206	1 1/8	WFB3S218E	2 1/16	1 1/4	1 5/8	1 7/8	3 1/4	1 11/32	2 3/4	3/8	9/32	3/8	3 3/4	5 3/8	3/8	2.20
	1 3/16	WFB3S219E														
	1 1/4	WFB3S2E20E														
	30.00	*WFB3S2M30E*	*52.30*	*31.80*	*43.70*	*47.60*	*82.60*	*34.13*	*69.80*	*10.00*	*7.10*	*9.50*	*95.20*	*136.50*	*9.50*	*1.00*
207	1 1/4	WFB3S220E	2 3/8	1 1/4	1 59/64	2	3 3/4	1 9/16	3 1/4	1/2	23/64	1/2	4 1/4	6 1/8	31/64	3.20
	1 3/8	WFB3S222E														
	1 7/16	WFB3S223E														
	35.00	*WFB3S2M35E*	*60.30*	*31.80*	*48.80*	*50.80*	*95.20*	*39.67*	*82.60*	*12.00*	*9.10*	*12.70*	*108.00*	*155.60*	*12.30*	*1.44*

Additional Notes

Please call 1-866-REXNORD for availability

Lubrication fitting tap size, 1/4"-28 UNF

For the Selection Guide, Load Ratings and Speed Limits, see the Klean-Gard & Dura-Klean Ball Bearings Engineering section on pages 456 - 458.

Note: Dimensions subject to change. Certified dimensions of ordered material furnished on request.

WTH3S200

Photo Shows a Ball Bearing Take-Up Unit with Nylon Coated Housing

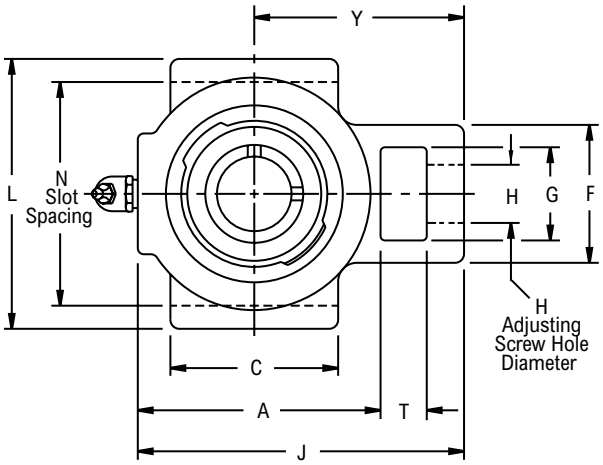

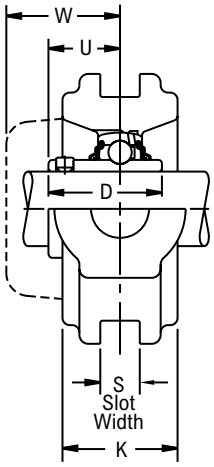

Product Features

- Corrosion resistant nylon coating
- Cast iron housing
- Inner & outer rings black oxide coated
- Spring locking setscrew mount
- Alignable & relubricatable
- Prelubricated with food grade grease
- See Features and Benefits for additional info on page 454.

Bearing Dimensions

Size Code	Shaft Diameter	Part Number	H Adjusting Screw Hole Diameter	N Slot Spacing	S Slot Width	A	C	D	F	G	J	K	L	T	U	W	Y	Approx. Weight
204	3/4	WTH3S212E	3/4	3.000	0.531	2 27/32	2 1/4	1 1/8	1 7/8	1 1/4	3 31/32	1 1/16	3 5/8	5/8	3/4	1 5/16	2 21/32	2.40
	20.00	*WTH3S2M20E*	*19.00*	*76.200*	*13.490*	*72.20*	*57.20*	*28.58*	*47.60*	*31.80*	*100.80*	*27.00*	*92.10*	*15.90*	*19.00*	*33.30*	*67.50*	*1.10*
205	7/8	WTH3S214E	3/4	3.000	0.531	2 29/32	2 1/4	1 11/64	1 27/32	1 1/4	4 1/32	1 3/32	3 5/8	5/8	51/64	1 5/16	2 21/32	2.70
	15/16	WTH3S215E																
	1	WTH3S216E																
	25.00	*WTH3S2M25E*	*19.00*	*76.200*	*13.490*	*73.80*	*57.20*	*29.77*	*46.80*	*31.80*	*102.40*	*27.80*	*92.10*	*15.90*	*20.20*	*33.30*	*67.50*	*1.20*
206	1 1/8	WTH3S218E	7/8	3.500	0.531	3 11/32	2 1/2	1 11/32	2 3/16	1 7/16	4 15/32	1 3/32	4 1/8	5/8	61/64	1 29/64	2 27/32	3.20
	1 3/16	WTH3S219E																
	1 1/4	WTH3S2E20E																
	30.00	*WTH3S2M30E*	*22.20*	*88.900*	*13.490*	*84.90*	*63.50*	*34.13*	*55.60*	*36.50*	*113.50*	*27.80*	*104.80*	*15.90*	*24.20*	*36.90*	*72.20*	*1.44*
207	1 1/4	WTH3S220E	7/8	3.500	0.531	3 11/16	2 3/4	1 9/16	2 5/16	1 7/16	4 13/16	1 3/16	4 1/8	5/8	1 7/64	1 35/64	2 31/32	4.00
	1 3/8	WTH3S222E																
	1 7/16	WTH3S223E																
	35.00	*WTH3S2M35E*	*22.20*	*88.900*	*13.490*	*93.70*	*69.80*	*39.67*	*58.70*	*36.50*	*122.20*	*30.20*	*104.80*	*15.90*	*28.20*	*39.30*	*75.40*	*1.80*
208	1 1/2	WTH3S224E	1 1/8	3.969	0.688	4 3/16	3 1/4	1 21/32	2 27/32	1 15/16	5 9/16	1 5/16	4 3/4	3/4	1 11/64	1 41/64	3 15/32	5.30
	40.00	*WTH3S2M40E*	*28.60*	*100.810*	*17.480*	*106.40*	*82.60*	*42.06*	*72.20*	*49.20*	*141.30*	*33.30*	*120.60*	*19.00*	*29.80*	*41.70*	*88.60*	*2.38*
209	1 5/8	WTH3S226E	1 1/8	3.969	0.688	4 3/16	3 1/4	1 49/64	2 7/8	1 15/16	5 9/16	1 3/8	4 3/4	3/4	1 15/64	1 21/32	3 15/32	5.30
	1 11/16	WTH3S227E																
	1 3/4	WTH3S228E																
210	1 15/16	WTH3S231E	1 1/8	3.969	0.688	4 9/16	3 3/8	1 13/16	2 7/8	1 15/16	5 15/16	1 43/64	4 3/4	3/4	1 17/64	1 25/32	3 19/32	6.60

Additional Notes

Please call 1-866-REXNORD for availability

Lubrication fitting tap size, 1/8" PT

For the Selection Guide, Load Ratings and Speed Limits, see the Klean-Gard & Dura-Klean Ball Bearings Engineering section on pages 456 - 458.

Note: Dimensions subject to change. Certified dimensions of ordered material furnished on request.

Rear Auxiliary Seal

Open Cap with Seal & O-ring

Closed Cap with O-ring

Klean-Gard Accessory Kit Part Numbers

Shaft Size	Basic Unit Number	KL Polypropylene Hsg (White) DC - Closed Cap with O-ring	KL Polypropylene Hsg D - Open Cap with Seal & O-ring	KL Polypropylene Rear Auxiliary Seal
3/4	212	K2126	KL2126D	KL212E
20.00	*2M20*	*K2126*	*KL2M206D*	*KL2M20E*
1	216	K2166	KL2166D	KL216E
25.00	*2M25*	*K2166*	*KLM256D*	*KL2M25E*
1 3/16	219	K2196	KL2196D	KL219E
1 1/4	2E20	K2196	KL2E206D	KL2E20E
30.00	*2M30*	*K2196*	*KL2M306D*	*KL2M30E*
1 1/4	220	K2236	KL2206D	KL220E
1 3/8	222	K2236	KL2226D	KL222E
1 7/16	223	K2236	KL2236D	KL223E
35.00	*2M35*	*K2236*	*KL2M356D*	*KL2M35E*
1 1/2	224	K2256	KL2246D	KL224E
40.00	*2M40*	*K2256*	*KL2M406D*	*KL2M40E*

Cylindrical Roller Bearings: Link-Belt

Contents

	Page
Features and Benefits	472
Nomenclature	473
Engineering	474
Dimensions	
Single Row	491
Double Row	499

Industries Served

Heavy-Duty Truck
Fluid Handling
Off-Highway Vehicles
Military
Oil/Natural Gas
Steel

Series M1000, 1200, 1300, 1900, 5200, 5300, 6200, 7300 Cylindrical Roller Bearings

Metric series cylindrical roller bearings are manufactured to ABMA boundary dimensions. These bearings require minimum space and provide maximum rated capacity. Various configurations including separable inner or outer ring combinations offer ample application flexibility.

High Quality Rings

Rings of high quality bearing steel for strength, toughness and durability.

Microfinished Raceways Assure Smooth Operations

Optimized Raceway Contact Area

Exclusive honed crown on roller profile for optimized raceway contact area and high capacity.

Positive Roller Spacing

- Structural design segmented retainer provides high strength, positive roller spacing and guidance.
- One-piece formed Steel Retainer provides positive roller spacing and controlled roller guidance.

Polymeric Retainer

Polymeric retainer of glass fiber reinforced nylon 6/6 provides full roller guidance, superior lubrication and reduced noise.

Segmented Retainers

Rigid structural design segmented Steel Retainer provides high strength, positive roller spacing and guidance.

All contact surfaces are contoured to minimize the wiping action between retainer segments and rollers, assuring full roller lubrication. Precision spacer segments contact the rollers above and below pitch diameter resulting in low friction loss and positive roller control.

Polymeric Retainers

Made of glass fiber reinforced nylon 6/6, molded polymeric retainers provide close control of roller "drop," low noise, full roller guidance and superior lubrication, at a competitive price.

Extensive testing has established compatibility with a broad range of standard lubricants and satisfactory operation at sustained temperatures to 275°F.

Formed Steel Retainers

One-piece deep coined formed Steel Retainer combines strength with positive roller spacing and roller guidance.

The retainer guides the rollers below the pitch line and provides control of roller drop. Line contact of rollers on guidance surfaces minimizes wiping action and promotes hydrodynamic lubrication.

Optional Series and Configurations

Series M cylindrical roller bearings are available in seven series with segmented retainers, five series with formed Steel Retainers, several series with polymeric retainers, and five series of the full roller complement type. Various configurations, including separable inner or outer ring combinations are offered.

Rollers

Exclusively crowned honed rollers provide optimized contact at the raceway. This assures efficient bearing performance under load, provides controlled stress distribution under all loads within the design capacity and compensates for shaft deflection.

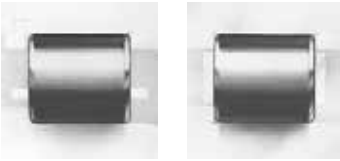

Rings

Rings are manufactured from high quality bearing steel to enhance fatigue resistance, strength, toughness and hardenability.

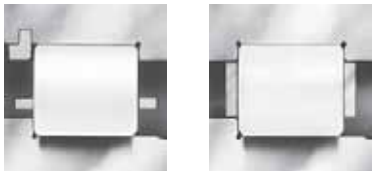

Bearings and ring and roller assemblies for omitted-ring applications are ABMA standard boundary plan for bore, outside diameter, and width… standard tolerances are RBEC-1. Precision tolerances to RBEC-5 are available.

Nomenclature

M A 1 2 05 GEA X C0

Symbol	Description
M	Metric series designation
A	Plain cylindrical inner ring
R	Single rib inner ring
SN	Short, single rib w/inner ring side plate
U	Double rib inner ring
	Omitted if inner ring not furnished
S	Metric bore size of next smaller bearing
None	Standard capacity
6	High capacity series
1	Narrow width
5	Wide width
7	Intermediate width
0	Extra light series
2	Light series
3	Medium series
9	Extra extra light series
05	One-fifth of bore diameter (mm)
G	Snap ring groove in outer ring O.D.
GG	Two snap ring grooves in outer ring O.D.
R	Snap ring groove in outer ring O.D. snap ring included
RR	Two snap ring grooves in outer ring O.D.; snap rings included
C	Plain cylindrical outer ring
D	Single rib outer ring
E	Double rib outer ring
SN	Short single rib w/outer ring side plate
T	Outer ring w/two retaining rings in I.D.
U	Single rib outer ring, one retaining ring in I.D.
A	Oversize O.D. outer ring
H	Blind dowel hole in outer ring O.D.
	Omitted if outer ring not furnished
X	Segmented retainer
M	Full complement (no retainer)
V	Formed Steel Retainer
B	Polymeric retainer
Wxxx	This suffix specifies special bearing features
None	Standard commercial clearance
C2	Less than basic clearance
C0	Basic clearance
C3	Greater than basic clearance
C4	Greater than C3 clearance
C5	Greater than standard clearance (STANDARD FOR ASSEMBLY WITH “A” OUTER RING AND OMITTED IN MODEL NUMBER)
Cxxx	Special specific clearance or range—i.e. /C002 or /C35-49 or C3549

Cylindrical Roller Bearings Selection Guide

To select a bearing, determine the applied radial load, any applied thrust load, the desired Rating Life, and applicable operating conditions. The procedure shown here will aid in selecting a bearing to meet an L_{10} design life. The formulas for calculating life expectancy should be used to determine the Rating Life L_{10} for the bearing selected. Cylindrical roller bearings are available in various series with cylindrical bores for direct shaft mounting.

Bearings in several series may fulfill the L_{10} life requirements. Speed limits, minimum shaft diameters, arrangement requirements and space limitations may be determining factors in final bearing selection. The selection procedures and rating formulas shown here are in agreement with The American Bearing Manufacturers Association Standards and ANSI/ABMA STD 11. Ratings are based on fatigue life. The Rating Life L10 or fatigue life at 90% reliability is the usual basis for bearing selection. Cylindrical roller bearings are essentially radial bearings. Nevertheless those styles where integral ribs are in the proper location on inner and outer rings will also support thrust loading. In fact, most such styles do support incidental, axial locating loads. Whenever applied thrust loading is known to exist, the guidelines given for Thrust Loads on the next page must be carefully followed.

Selection and life expectancy formulas shown here are also valid for inner ring and roller assemblies and for outer ring and roller assemblies provided they are run directly on bearing quality steel shafts or housings properly hardened and ground. To assure a satisfactory bearing application, fitting practice, mounting, lubrication, sealing, static rating, housing strength, operating conditions and maintenance must be considered.

Steps for Selection

Step 1

Determine an appropriate L_{10} design life.

Type of service	Operating time, hours per year	Design life, years	L_{10} design life, hours
Light seasonal usage	500 to 750	3-5	3,000
Heavy seasonal usage	1,400 to 1,600	4-6	8,000
Industrial—8 hour shift	2,000	10	20,000
Industrial—16 hour shift	4,000	10	40,000
Industrial—continuous	8,700	10	80,000 to 100,000
Continuous—high reliability	—	—	120,000 to 300,000

Step 2

Determine a required $\left(\frac{C}{P}\right)$ from Table 1.

Step 3

Calculate the required C and select a cylindrical roller bearing.

P = Fr

required C = $\left(\frac{C}{P}\right)$P using $\left(\frac{C}{P}\right)$ from Step 2.

Select a cylindrical roller bearing of the desired type having a Basic Load Rating C equal to or greater than the required C from the appropriate series. The life expectancy of other sizes and series of cylindrical roller bearings can be calculated. When thrust load is present, check the individual bearing thrust capacity and follow the requirements for lubrication under thrust conditions.

Step 4

Determine the permissible speed limit of the bearing through the following procedure:

Permissible speed limits are of practical value only when considered with other factors of bearing operation. Not every application functions satisfactorily at the listed speeds. Load, lubrication, and temperature factors influence the performance. Bearing operation at the listed speed limit demands excellent lubrication, moderate load, and reasonable temperature environment.

Permissible speed can be approximated from the limiting DN value, which is the product of the bearing bore in millimeters and the speed in RPM. The DN values shown below are nominal. For higher permissible speeds, consult Rexnord Bearing Division.

DN value = Bearing bore (mm) x speed (RPM)

Bearing series	Limit of DN Value*
Series 1900, 1000, 1200, 1300 & 7300	
with segmented or polymeric retainer	450,000
with formed Steel Retainer	250,000
Series 5200, 6200, and 5300	
with segmented or polymeric retainer (5200, 5300 only)	330,000
with formed Steel Retainer	180,000
Full complement	150,000

*These values assume oil lubrication

Selection

Symbols for formulas:

C = Basic Load Rating, pounds (or newtons)

Co = static Load Rating, pounds (or newtons)

Fr = radial load, pounds (or newtons)

L_{10} = rating life, hours

n = speed, revolutions per minute

P = equivalent radial load, pounds (or newtons)

Table 1 • Relation of L10 life and speed to $\left(\frac{C}{P}\right)$

Bearing Life Hours L10	Ratio $\left(\frac{C}{P}\right)$								
	Speed, n								
	50	100	200	300	400	500	600	700	800
3000	1.93	2.38	2.93	3.31	3.61	3.86	4.07	4.27	4.44
4000	2.11	2.59	3.19	3.61	3.93	4.20	4.44	4.65	4.84
5000	2.25	2.77	3.42	3.86	4.20	4.50	4.75	4.97	5.18
6000	2.38	2.93	3.61	4.07	4.44	4.75	5.02	5.25	5.47
8000	2.59	3.19	3.93	4.44	4.84	5.18	5.47	5.73	5.96
10000	2.77	3.42	4.20	4.75	5.18	5.54	5.85	6.12	6.37
12000	2.93	3.61	4.44	5.02	5.47	5.85	6.18	6.47	6.73
14000	3.07	3.78	4.65	5.25	5.73	6.12	6.47	6.77	7.05
16000	3.19	3.93	4.84	5.47	5.96	6.37	6.73	7.05	7.34
18000	3.31	4.07	5.02	5.66	6.18	6.60	6.97	7.30	7.60
20000	3.42	4.20	5.18	5.85	6.37	6.81	7.20	7.54	7.85
25000	3.65	4.50	5.54	6.25	6.81	7.29	7.70	8.06	8.39
30000	3.86	4.75	5.85	6.60	7.20	7.70	8.13	8.51	8.86
35000	4.04	4.97	6.12	6.92	7.54	8.06	8.51	8.92	9.28
40000	4.20	5.18	6.37	7.20	7.85	8.39	8.86	9.28	9.66
45000	4.36	5.36	6.60	7.46	8.13	8.69	9.18	9.61	10.00
50000	4.50	5.54	6.81	7.70	8.39	8.97	9.48	9.92	10.30
60000	4.75	5.85	7.20	8.13	8.86	9.48	10.00	10.5	10.90
70000	4.97	6.12	7.54	8.51	9.28	9.92	10.50	11.00	11.40
80000	5.18	6.37	7.85	8.86	9.66	10.30	10.90	11.40	11.90
90000	5.36	6.60	8.13	9.18	10.00	10.70	11.30	11.80	12.30
100000	5.54	6.81	8.39	9.48	10.30	11.00	11.70	12.20	12.70
150000	6.25	7.70	9.48	10.70	11.70	12.50	13.20	13.80	14.40
200000	6.81	8.39	10.30	11.70	12.70	13.60	14.40	15.00	15.70
	Speed, n								
	900	1000	1200	1500	1800	2400	3000	3600	6000
3000	4.60	4.75	5.02	5.36	5.66	6.18	6.60	6.97	8.13
4000	5.02	5.18	5.47	5.85	6.18	6.73	7.20	7.60	8.86
5000	5.36	5.54	5.85	6.25	6.60	7.20	7.70	8.13	9.48
6000	5.66	5.85	6.18	6.60	6.97	7.60	8.13	8.59	10.00
8000	6.18	6.37	6.73	7.20	7.60	8.29	8.86	9.36	10.90
10000	6.60	6.81	7.20	7.70	8.13	8.86	9.48	10.00	11.70
12000	6.97	7.20	7.60	8.13	8.59	9.36	10.00	10.60	12.30
14000	7.30	7.54	7.96	8.51	8.99	9.80	10.50	11.10	12.90
16000	7.60	7.85	8.29	8.86	9.36	10.20	10.90	11.50	13.40
18000	7.88	8.13	8.59	9.18	9.70	10.60	11.30	11.90	13.90
20000	8.13	8.39	8.86	9.48	10.00	10.90	11.70	12.30	14.40
25000	8.69	8.97	9.48	10.10	10.70	11.70	12.50	13.20	15.40
30000	9.18	9.48	10.00	10.70	11.30	12.30	13.20	13.90	16.20
35000	9.61	9.92	10.50	11.20	11.80	12.90	13.80	14.60	17.00
40000	10.00	10.30	10.90	11.70	12.30	13.40	14.40	15.20	17.70
45000	10.40	10.70	11.30	12.10	12.80	13.90	14.90	15.70	18.30
50000	10.70	11.00	11.70	12.50	13.20	14.40	15.40	16.20	18.90
60000	11.30	11.70	12.30	13.20	13.90	15.20	16.20	17.10	20.00
70000	11.80	12.20	12.90	13.80	14.60	15.90	17.00	17.90	20.90
80000	12.30	12.70	13.40	14.40	15.20	16.50	17.70	18.70	21.80
90000	12.80	13.20	13.90	14.90	15.70	17.10	18.30	19.40	22.60
100000	13.20	13.60	14.40	15.40	16.20	17.70	18.90	20.00	23.30
150000	14.90	15.40	16.20	17.30	18.30	20.00	21.40	22.60	26.30
200000	16.20	16.70	17.70	18.90	20.00	21.80	23.30	24.60	28.70

Basic Formulas

$$\left(\frac{C}{P}\right) = \left(\frac{L_{10} \times n \times 60}{1{,}000{,}000}\right)^{3/10}$$

$$L_{10} = \frac{\left(\frac{C}{P}\right)^{10/3} \times 1{,}000{,}000}{n \times 60}$$

Life Expectancy

To calculate the Rating Life L10 of any pair of selected or trial bearings:

Step 1

Determine the equivalent radial load P.

P = Fr

Step 2 Calculate the ratio of the bearing Basic Load Rating C to the equivalent radial load.

$$\frac{C}{P}$$

Step 3

Approximate the bearing life from Table 1.

Thrust Loads

The integral guiding ribs on standard cylindrical roller bearing inner and outer rings will support limited thrust loads. In addition, special tolerances and processing can be used to substantially increase axial load capacity. In either case, excellent lubrication (preferably with an EP lubricant) and a stabilizing radial load are required. For standard bearings, the allowable thrust load is estimated as

$$TM = \frac{C_A}{3n^{0.3}}$$

where TM — Maximum allowable thrust load, pounds (or newtons)

C_A — Load rating C (pounds or newtons) of the narrowest series for the given annulus (O.D. and bore) at 33 1/3 RPM and 500L_{10} hours.

n — Operating speed, RPM

In addition, the thrust load should be no greater than 25% of the radial load. Where application conditions exceed either of these limits, Rexnord Bearing Division should be consulted.

Life Adjustment

The Rating Life, L_{10}, may be modified for some applications in accordance with the formula

$$L_n = a_1 a_2 a_3 L_{10}$$

where L_n = Adjusted life for (100-n) % reliablility,

a_1 = Life adjustment factor for reliability

a_2 = Life adjustment factor for material and processing

a_3 = Life adjustment factor for operating conditions.

For most normal applications, all factors will be taken as 1, and the Rating Life used as the selection basis or life estimate. In addition, as long as standard catalog bearings are used, a2 will be normally set equal to one. The factor a3 covers such things as lubrication, misalignment, and temperature. Some conditions that could yield a3 significantly different than unity include speeds less than 20000 DN or greater than 200000 DN, temperatures below –40°F *(–40°C)* or above 275°F *(135°C)*, or misalignment greater than 0.0005 radians.. For other possible conditions, as well as additional information on life adjustment actors, consult Rexnord Bearing Division.

Ratings 25 mm, 30 mm, 35 mm, 40 mm Bores

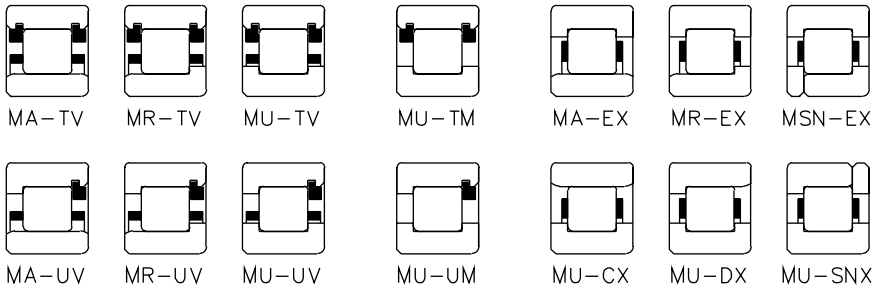

Separable — Non-Separable

Formed Steel Retainer — Full Roller Complement — Segmented Steel Retainer

Load Ratings (pounds/newtons)

Basic Bearing Number	Formed Steel Retainer						Segmented Steel Retainer			Full Roller Complement		
	Separable			Non-separable								
	C Basic Load Rating	Bearing Capacity 500 RPM, 3000 Hrs. L_{10}	Co Basic Static Load Rating	C Basic Load Rating	Bearing Capacity 500 RPM, 3000 Hrs. L_{10}	Co Basic Static Load Rating	C Basic Load Rating	Bearing Capacity 500 RPM, 3000 Hrs. L_{10}	Co Basic Static Load Rating	C Basic Load Rating	Bearing Capacity 500 RPM, 3000 Hrs. L_{10}	Co Basic Static Load Rating
1205	4330	1120	5220	5280	1370	5220	6170	1600	6430	7020	1820	7630
	19200	4980	23200	23500	6080	23200	27500	7110	28600	31200	8090	33900
5205	5930	1540	7830	7240	1880	7830	8460	2190	9640	9620	2490	11400
	26400	6830	34800	32200	8340	34800	37600	9750	42900	42800	11100	50900
1305	6310	1630	6690	7710	2000	6690	8840	2290	8030	9920	2570	9370
	28100	7270	29800	34300	8880	29800	39300	10200	35700	44100	11400	41700
7305	8070	2090	9180	9850	2550	9180	11300	2930	11000	12700	3280	12800
	35900	9300	40800	43800	11400	40800	50200	13000	49000	56400	14600	57100
5305	9720	2520	11700	11900	3070	11700	13600	3530	14000	15300	3960	16300
	43200	11200	51900	52800	13700	51900	60500	15700	62300	68100	17600	72500
1206	5990	1550	7170	7320	1900	7170	8150	2110	8270	9340	2420	9930
	26700	6910	31900	32600	8430	31900	36200	9390	36800	41600	10800	44200
5206	9040	2340	12200	11000	2860	12200	12300	3180	14000	14100	3650	16800
	40200	10400	54100	49100	12700	54100	54700	14200	62500	62700	16200	74900
1306	7970	2060	9270	9730	2520	9270	10300	2680	10000	12100	3130	12400
	35400	9180	41200	43300	11200	41200	45900	11900	44700	53700	13900	55000
7306	10500	2720	13200	12800	3320	13200	13600	3530	14400	15900	4130	17700
	46800	12100	58900	57100	14800	58900	60600	15700	63800	70700	18400	78700
5306	12800	3320	17100	15700	4060	17100	16600	4310	18500	19400	5030	22800
	57000	14800	76100	69600	18000	76100	74000	19200	82400	86400	22400	101000
1207	6840	1770	8030	8350	2160	8030	9290	2410	9270	10700	2760	11100
	30400	7870	35700	37100	9610	35700	41300	10700	41200	47400	12300	49500
5207	11300	2920	15300	13800	3570	15300	15300	3970	17700	17600	4560	21200
	50200	13000	68100	61300	15900	68100	68300	17700	78600	78300	20300	94300
1307	9840	2550	12000	12000	3110	12000	13500	3490	14000	15600	4040	17000
	43800	11300	53400	53400	13800	53400	60000	15500	62400	69400	18000	75700
7307	13800	3580	18700	16900	4380	18700	17900	4630	20100	20700	5350	24400
	61500	15900	83100	75100	19500	83100	79400	20600	89500	91900	23800	109000
5307	15900	4120	22400	19400	5030	22400	20500	5320	24100	23800	6150	29200
	70800	18300	99400	86400	22400	99400	91400	23700	107000	106000	27400	130000
1208	8270	2140	10200	10100	2620	10200	11200	2890	11600	12700	3290	13800
	36800	9530	45300	44900	11600	45300	49700	12900	51800	56500	14600	61500
5208	14300	3710	20700	17500	4530	20700	19400	5010	23600	22000	5700	28000
	63800	16500	91900	77900	20200	91900	86100	22300	105000	97900	25400	125000
1308	12600	3260	15200	15400	3980	15200	16300	4230	16400	19100	4940	20200
	56000	14500	67500	68400	17700	67500	72600	18800	73100	84800	22000	90000
7308	17900	4630	23800	21800	5660	23800	23200	6010	25800	27100	7020	31800
	79600	20600	106000	97200	25200	106000	103000	26700	115000	121000	31200	141000
5308	20000	5190	27600	24500	6330	27600	26000	6720	29900	30300	7860	36800
	89100	23100	123000	109000	28200	123000	115000	29900	133000	135000	35000	163000

Ratings 45 mm, 50 mm, 55 mm Bores

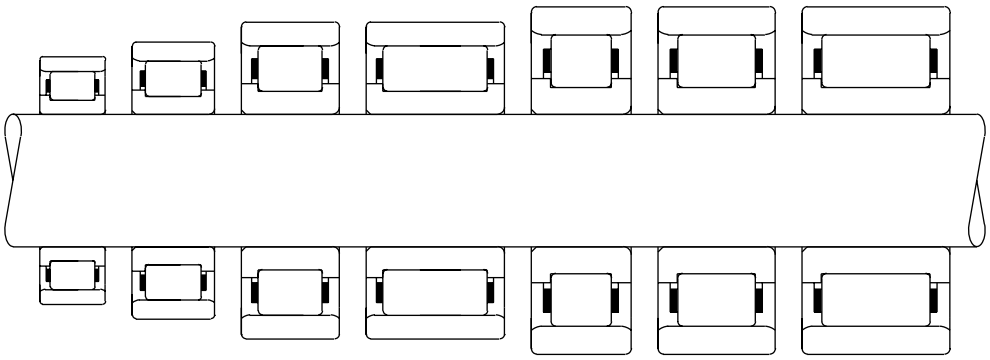

Size Relationship

Load Ratings (pounds/newtons)

Basic Bearing Number	Formed Steel Retainer						Segmented Steel Retainer			Full Roller Complement		
	Separable			Non-separable								
	C Basic Load Rating	Bearing Capacity 500 RPM, 3000 Hrs. L_{10}	Co Basic Static Load Rating	C Basic Load Rating	Bearing Capacity 500 RPM, 3000 Hrs. L_{10}	Co Basic Static Load Rating	C Basic Load Rating	Bearing Capacity 500 RPM, 3000 Hrs. L_{10}	Co Basic Static Load Rating	C Basic Load Rating	Bearing Capacity 500 RPM, 3000 Hrs. L_{10}	Co Basic Static Load Rating
1209	9670	2500	12900	11800	3060	12900	12900	3340	14500	14500	3750	16900
	43000	11100	57300	52500	13600	57300	57400	14900	64500	64400	16700	75200
5209	15600	4030	23800	19000	4920	23800	20800	5380	26700	23300	6040	31200
	69200	17900	106000	84500	21900	106000	92300	23900	119000	104000	26800	139000
1309	15900	4120	20400	19400	5040	20400	20600	5320	22000	23800	6160	26700
	70800	18300	90900	86500	22400	90900	91400	23700	97900	106000	27400	119000
7309	20300	5260	28000	24800	6430	28000	26200	6790	30100	30300	7860	36600
	90400	23400	124000	110000	28600	124000	117000	30200	134000	135000	35000	163000
5309	24800	6440	36200	30300	7860	36200	32100	8310	39000	37100	9610	47400
	111000	28600	161000	135000	35000	161000	143000	37000	174000	165000	42700	211000
1010	…..	…..	…..	…..	…..	…..	8840	2290	11100	…..	…..	…..
	…..	…..	…..	…..	…..	…..	39300	10200	49400	…..	…..	…..
1210	9830	2550	13600	12000	3110	13600	13000	3380	15200	15100	3900	18400
	43700	11300	60600	53400	13800	60600	58000	15000	67700	67000	17300	82000
5210	15800	4100	25100	19300	5000	25100	21000	5440	28100	24200	6280	34000
	70400	18200	112000	85900	22300	112000	93400	24200	125000	108000	27900	151000
1310	18600	4810	24000	22700	5870	24000	23900	6200	25900	27700	7170	31400
	82500	21400	107000	101000	26100	107000	107000	27600	115000	123000	31900	140000
7310	24000	6220	33500	29300	7590	33500	31000	8030	36000	35900	9290	4380
	107000	27700	149000	130000	33800	149000	138000	35700	160000	159000	41300	195000
5310	29300	7600	43300	35800	9280	43300	37900	9810	46600	43800	11300	56600
	131000	33800	193000	159000	41300	193000	169000	43600	207000	195000	50500	252000
1911	…..	…..	…..	…..	…..	…..	6960	1800	9570	…..	…..	…..
	…..	…..	…..	…..	…..	…..	31000	8020	42600	…..	…..	…..
1011	…..	…..	…..	…..	…..	…..	11200	2890	14300	…..	…..	…..
	…..	…..	…..	…..	…..	…..	49800	12900	63400	…..	…..	…..
1211	11700	3040	16400	1430	3710	16400	15600	4030	18400	18000	4650	22300
	52200	13500	73200	63700	16500	73200	69200	17900	81800	79900	20700	99000
5211	19200	4960	30900	23400	6060	30900	25400	6590	34600	29400	7600	41900
	85300	22100	138000	104000	27000	138000	113000	29300	154000	131000	33800	186000
1311	21900	5680	28800	26800	6930	28800	26800	6930	28800	31000	8020	35000
	97500	25300	128000	119000	30800	128000	119000	30800	128000	138000	35700	156000
7311	29300	7590	41800	35800	9270	41800	35800	9270	41800	41400	10700	50800
	130000	33800	186000	159000	41200	186000	159000	41200	186000	184000	47700	226000
5311	38100	9860	58600	46500	12000	58600	46500	12000	58600	53800	13900	71100
	169000	43900	260000	207000	53500	260000	207000	53500	260000	239000	61900	316000

Ratings 60 mm, 65 mm, 70 mm Bores

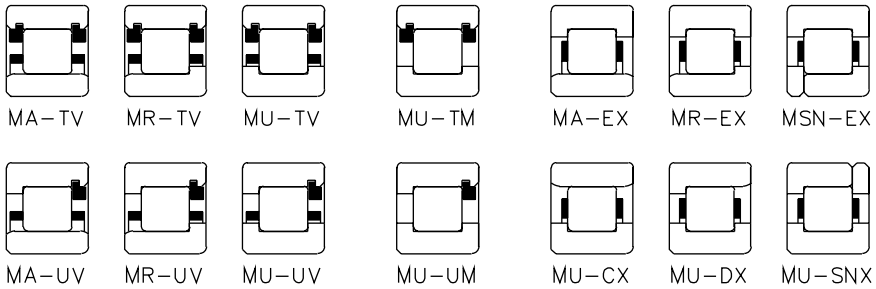

Separable — Non-Separable

Formed Steel Retainer — Full Roller Complement — Segmented Steel Retainer

Load Ratings (pounds/newtons)

Basic Bearing Number	Formed Steel Retainer						Segmented Steel Retainer			Full Roller Complement		
	Separable			Non-separable								
	C Basic Load Rating	Bearing Capacity 500 RPM, 3000 Hrs. L_{10}	Co Basic Static Load Rating	C Basic Load Rating	Bearing Capacity 500 RPM, 3000 Hrs. L_{10}	Co Basic Static Load Rating	C Basic Load Rating	Bearing Capacity 500 RPM, 3000 Hrs. L_{10}	Co Basic Static Load Rating	C Basic Load Rating	Bearing Capacity 500 RPM, 3000 Hrs. L_{10}	Co Basic Static Load Rating
1912	…..	…..	…..	…..	…..	…..	7200	1870	10300	…..	…..	…..
	…..	…..	…..	…..	…..	…..	32000	8300	45600	…..	…..	…..
1012	…..	…..	…..	…..	…..	…..	11700	3040	15600	…..	…..	…..
	…..	…..	…..	…..	…..	…..	52200	13500	69200	…..	…..	…..
1212	14500	3760	19600	17700	4590	19600	19400	5020	22100	21700	5630	25800
	64600	16700	87400	78900	20400	87400	86100	22300	98300	96700	25000	115000
5212	24700	6390	38900	30100	7800	38900	32900	8520	43700	36900	9570	51000
	110000	28400	173000	134000	34700	173000	146000	37900	194000	164000	42600	227000
1312	24900	6450	32800	30400	7880	32800	32100	8330	35300	37200	9630	42900
	111000	28700	146000	135000	35500	146000	143000	37000	157000	165000	42800	191000
7312	32600	8450	46400	39800	10300	46400	42100	10900	50000	48700	12600	60700
	145000	37600	206000	177000	45900	206000	187000	48500	222000	217000	56100	270000
5312	43900	11400	68000	53600	13900	68000	56600	14700	73200	65500	17000	88900
	195000	50500	302000	238000	61700	302000	252000	65200	326000	291000	75500	395000
1913	…..	…..	…..	…..	…..	…..	7600	1970	11200	…..	…..	…..
	…..	…..	…..	…..	…..	…..	33800	8750	50000	…..	…..	…..
1013	…..	…..	…..	…..	…..	…..	12000	3100	16300	…..	…..	…..
	…..	…..	…..	…..	…..	…..	53200	13800	72400	…..	…..	…..
1213	16800	4360	24400	20500	5320	24400	21400	5540	25800	24700	6390	31200
	74800	19400	109000	91400	23700	109000	95100	24600	115000	110000	28400	139000
5213	26800	6930	44400	32700	8460	44400	34000	8810	46800	39300	10200	56700
	119000	30800	197000	145000	37600	197000	151000	39200	208000	175000	45200	252000
1313	30800	7970	41900	37600	9730	41900	37600	9730	41900	43400	11300	50900
	137000	35400	186000	167000	43300	186000	167000	43300	186000	193000	50100	226000
7313	39200	10100	57200	47800	12400	57200	47800	12400	57200	55300	14300	69400
	174000	45100	254000	213000	55100	254000	213000	55100	254000	246000	63700	309000
5313	54900	14200	88200	67000	17300	88200	67000	17300	88200	77500	20100	107000
	244000	63200	392000	298000	77200	392000	298000	77200	392000	345000	89300	476000
1914	…..	…..	…..	…..	…..	…..	10900	2810	15800	…..	…..	…..
	…..	…..	…..	…..	…..	…..	48300	12500	70400	…..	…..	…..
1014	…..	…..	…..	…..	…..	…..	14600	3770	18600	…..	…..	…..
	…..	…..	…..	…..	…..	…..	64800	16800	82800	…..	…..	…..
1214	18100	4700	26300	22100	5730	26300	24100	6230	29400	27900	7190	35600
	80600	20900	117000	98500	25500	117000	107000	27700	131000	124000	32000	158000
5214	29900	7750	50100	36600	9470	50100	39700	10300	56000	45900	11900	67800
	133000	34500	223000	163000	42100	223000	177000	45800	249000	204000	52800	302000
1314	35300	9130	48800	43000	11100	48800	43000	11100	48800	49800	12900	59200
	157000	40600	217000	191000	49600	217000	191000	49600	217000	221000	57400	263000
7314	43800	11300	64400	53500	13800	64400	53500	13800	64400	61800	16000	78200
	195000	50400	287000	238000	61600	287000	238000	61600	287000	275000	71300	348000
5314	57600	14900	91700	70400	18200	91700	70400	18200	91700	81400	21100	111000
	256000	66400	408000	313000	81100	408000	313000	81100	408000	362000	93800	495000

Ratings 75 mm, 80 mm, 85 mm Bores

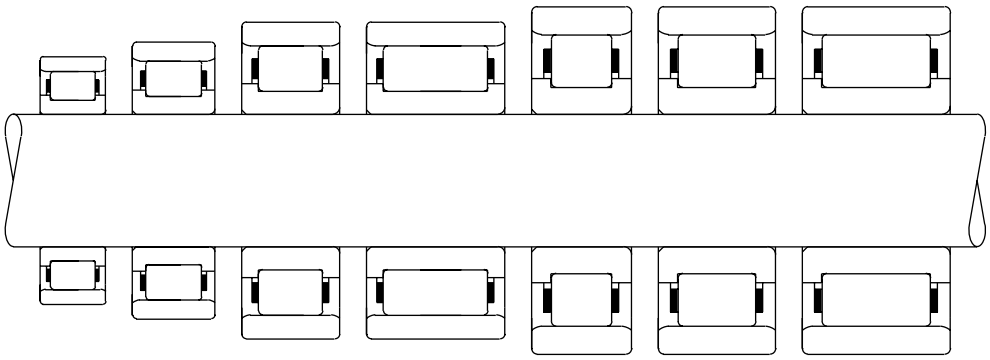

Size Relationship

Load Ratings (pounds/newtons)

Basic Bearing Number	Formed Steel Retainer						Segmented Steel Retainer			Full Roller Complement		
	Separable			Non-separable								
	C Basic Load Rating	Bearing Capacity 500 RPM, 3000 Hrs. L_{10}	Co Basic Static Load Rating	C Basic Load Rating	Bearing Capacity 500 RPM, 3000 Hrs. L_{10}	Co Basic Static Load Rating	C Basic Load Rating	Bearing Capacity 500 RPM, 3000 Hrs. L_{10}	Co Basic Static Load Rating	C Basic Load Rating	Bearing Capacity 500 RPM, 3000 Hrs. L_{10}	Co Basic Static Load Rating
1915	…..	…..	…..	…..	…..	…..	11200	2910	16900	…..	…..	…..
	…..	…..	…..	…..	…..	…..	50000	13000	75200	…..	…..	…..
1015	…..	…..	…..	…..	…..	…..	15300	3970	20300	…..	…..	…..
	…..	…..	…..	…..	…..	…..	68200	17700	90300	…..	…..	…..
1215	18800	4880	28000	23000	5960	28000	24900	6450	31100	28600	7390	37400
	83800	21700	125000	102000	26500	125000	111000	28700	139000	157000	32900	166000
5215	32500	8430	56600	39700	10300	56600	43000	11100	62900	49300	12800	75500
	145000	37500	252000	177000	45800	252000	191000	49500	280000	219000	56800	336000
1315	36600	9470	49700	44600	11600	49700	44600	11600	49700	51600	13400	60300
	163000	42100	221000	199000	51400	221000	199000	51400	221000	230000	59500	268000
7315	48500	12600	71500	59300	15400	71500	59300	15400	71500	68600	17800	86900
	216000	55900	318000	264000	68300	318000	264000	68300	318000	305000	79000	386000
5315	70900	18400	116000	86600	22400	116000	86600	22400	116000	100000	25900	141000
	315000	81700	518000	385000	99800	518000	385000	99800	518000	446000	115000	629000
1916	…..	…..	…..	…..	…..	…..	11600	3010	18000	…..	…..	…..
	…..	…..	…..	…..	…..	…..	51700	13400	80000	…..	…..	…..
1016	…..	…..	…..	…..	…..	…..	19200	4970	25800	…..	…..	…..
	…..	…..	…..	…..	…..	…..	85300	22100	115000	…..	…..	…..
1216	20600	5330	30100	25100	6500	30100	27200	7040	33400	30200	7820	38400
	91500	23700	134000	112000	28900	134000	121000	31300	149000	134000	34800	171000
5216	36800	9540	63700	45000	11600	63700	48700	12600	70700	54000	14000	81300
	164000	42400	283000	200000	51800	283000	216000	56100	315000	240000	62300	362000
1316	41500	10800	57300	50700	13100	57300	50700	13100	57300	58700	15200	69600
	185000	47900	255000	226000	58400	255000	226000	58400	255000	261000	67600	309000
7316	55100	14300	82400	67300	17400	82400	67300	17400	82400	77900	20200	100000
	245000	63500	367000	299000	77500	367000	299000	77500	367000	346000	89700	445000
5316	73300	19000	119000	89400	23200	119000	89400	23200	119000	103000	26800	144000
	326000	84400	528000	398000	103000	528000	398000	103000	528000	460000	119000	642000
1917	…..	…..	…..	…..	…..	…..	13700	3550	20900	…..	…..	…..
	…..	…..	…..	…..	…..	…..	60900	15800	93100	…..	…..	…..
1017	…..	…..	…..	…..	…..	…..	19700	5100	27000	…..	…..	…..
	…..	…..	…..	…..	…..	…..	87500	22700	120000	…..	…..	…..
1217	24800	6410	36700	30200	7830	36700	31500	8160	38700	36300	9410	46900
	110000	28500	163000	134000	34800	163000	140000	36300	172000	162000	41900	208000
5217	45300	11700	79700	55300	14300	79700	57600	14900	84100	66400	17200	102000
	201000	52200	354000	246000	63700	354000	356000	66300	374000	296000	76500	453000
1317	44600	11500	61200	54400	14100	61200	54400	14100	61200	63000	16300	74300
	198000	51300	272000	242000	62700	272000	242000	62700	272000	280000	72500	330000
7317	61700	16000	92900	75400	19500	92900	75400	19500	92900	87200	22600	113000
	275000	71100	413000	335000	86800	413000	335000	86900	413000	388000	100000	502000
5317	86300	22400	143000	105000	27300	143000	105000	27300	143000	122000	31600	174000
	384000	99500	636000	469000	121000	636000	469000	121000	636000	542000	140000	773000

Ratings 90 mm, 95 mm, 100 mm Bores

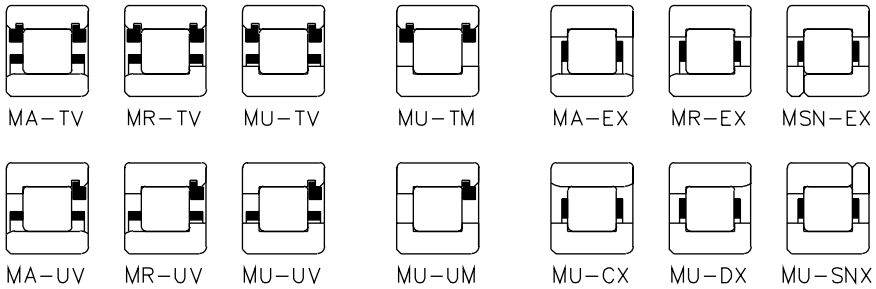

Separable — Non-Separable

Formed Steel Retainer — Full Roller Complement — Segmented Steel Retainer

Load Ratings (pounds/newtons)

Basic Bearing Number	Formed Steel Retainer						Segmented Steel Retainer			Full Roller Complement		
	Separable			Non-separable								
	C Basic Load Rating	Bearing Capacity 500 RPM, 3000 Hrs. L_{10}	Co Basic Static Load Rating	C Basic Load Rating	Bearing Capacity 500 RPM, 3000 Hrs. L_{10}	Co Basic Static Load Rating	C Basic Load Rating	Bearing Capacity 500 RPM, 3000 Hrs. L_{10}	Co Basic Static Load Rating	C Basic Load Rating	Bearing Capacity 500 RPM, 3000 Hrs. L_{10}	Co Basic Static Load Rating
1918	…..	…..	…..	…..	…..	…..	14200	3670	22200	…..	…..	…..
	…..	…..	…..	…..	…..	…..	6300	16300	98900	…..	…..	…..
1018	…..	…..	…..	…..	…..	…..	24900	6440	33500	…..	…..	…..
	…..	…..	…..	…..	…..	…..	111000	28600	149000	…..	…..	…..
1218	28700	7440	42600	35100	9090	42600	38100	9880	47600	42600	11000	55100
	128000	33100	190000	156000	40400	190000	170000	43900	212000	189000	49000	245000
5218	51000	13200	89100	62300	16100	89100	67700	17500	99600	75500	19600	115000
	227000	58700	396000	277000	71700	396000	301000	78000	443000	336000	87000	513000
1318	52600	13600	74200	64200	16600	74200	64200	16600	74200	74200	19200	90100
	234000	60600	330000	285000	73900	330000	285000	73900	330000	330000	85500	401000
7318	69000	17900	105000	84300	21800	105000	84300	21800	105000	97500	25300	128000
	307000	79500	469000	375000	97100	469000	375000	97100	469000	434000	112000	569000
5318	88400	22900	145000	108000	27900	145000	108000	27900	145000	125000	32300	176000
	393000	102000	644000	480000	124000	644000	480000	124000	644000	556000	144000	783000
1919	…..	…..	…..	…..	…..	…..	14600	3790	23600	…..	…..	…..
	…..	…..	…..	…..	…..	…..	65100	16900	105000	…..	…..	…..
1019	…..	…..	…..	…..	…..	…..	25500	6600	35100	…..	…..	…..
	…..	…..	…..	…..	…..	…..	113000	29400	156000	…..	…..	…..
1219	33400	8650	50000	40800	10600	50000	42600	11000	53000	49500	12800	64700
	149000	38500	222000	181000	47000	222000	189000	49000	236000	220000	57000	288000
5219	58500	15200	103000	71400	18500	103000	74600	19300	109000	86700	22400	133000
	260000	67400	457000	318000	82300	457000	332000	85900	484000	386000	99800	592000
1319	55300	14300	80500	67600	17500	80500	67600	17500	80500	77400	20100	96600
	246000	63700	358000	300000	77800	358000	300000	77800	358000	344000	89200	430000
7319	75800	19600	121000	92600	24000	121000	92600	24000	121000	106000	27500	145000
	337000	87400	537000	412000	107000	537000	412000	107000	537000	472000	122000	644000
5319	93000	24100	157000	114000	29400	157000	114000	29400	157000	130000	33700	188000
	414000	107000	698000	505000	131000	698000	505000	131000	698000	579000	150000	838000
1920	…..	…..	…..	…..	…..	…..	17300	4470	25600	…..	…..	…..
	…..	…..	…..	…..	…..	…..	76800	19900	114000	…..	…..	…..
1020	…..	…..	…..	…..	…..	…..	26100	6760	36700	…..	…..	…..
	…..	…..	…..	…..	…..	…..	116000	30100	163000	…..	…..	…..
1220	36500	9470	54800	44600	11600	54800	46600	12100	58000	54100	14000	70900
	163000	42100	244000	198000	51400	244000	207000	53700	258000	241000	62400	315000
5220	65900	17100	117000	80500	20800	117000	84000	21800	124000	97700	25300	151000
	293000	76000	520000	358000	92700	520000	374000	96800	551000	434000	113000	674000
1320	60600	15700	88300	74000	19200	88300	74000	19200	88300	84800	22000	106000
	270000	69800	393000	329000	85300	393000	329000	85300	393000	377000	97700	472000
7320	82500	21400	131000	101000	26100	131000	101000	26100	131000	115000	29900	157000
	367000	95000	584000	448000	116000	584000	448000	116000	584000	513000	133000	700000
5320	111000	28700	192000	135000	35100	192000	135000	35100	192000	155000	40200	231000
	493000	128000	855000	602000	156000	855000	602000	156000	855000	691000	179000	1030000

Ratings 105 mm,110 mm, 120 mm Bores

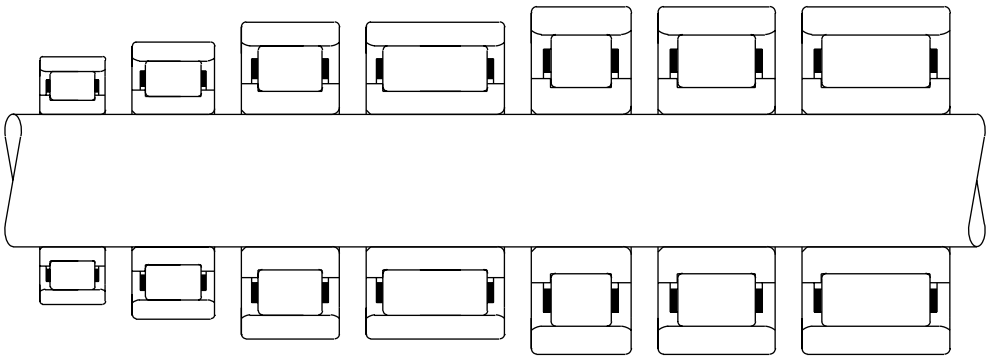

Size Relationship

Load Ratings (pounds/newtons)

Basic Bearing Number	Formed Steel Retainer						Segmented Steel Retainer			Full Roller Complement		
	Separable			Non-separable								
	C Basic Load Rating	Bearing Capacity 500 RPM, 3000 Hrs. L_{10}	Co Basic Static Load Rating	C Basic Load Rating	Bearing Capacity 500 RPM, 3000 Hrs. L_{10}	Co Basic Static Load Rating	C Basic Load Rating	Bearing Capacity 500 RPM, 3000 Hrs. L_{10}	Co Basic Static Load Rating	C Basic Load Rating	Bearing Capacity 500 RPM, 3000 Hrs. L_{10}	Co Basic Static Load Rating
1921	…..	…..	…..	…..	…..	…..	17900	4650	27300	…..	…..	…..
	…..	…..	…..	…..	…..	…..	79800	20700	121000	…..	…..	…..
1021	…..	…..	…..	…..	…..	…..	31000	8040	45000	…..	…..	…..
	…..	…..	…..	…..	…..	…..	138000	35800	200000	…..	…..	…..
1221	38600	9990	57800	47100	12200	57800	49200	12700	61200	57200	14800	74800
	172000	44400	257000	210000	54300	257000	219000	56600	272000	254000	65800	333000
5221	73400	19000	132000	89600	23200	132000	93600	24200	140000	109000	28200	171000
	327000	84600	588000	399000	103000	588000	416000	108000	622000	484000	125000	760000
1321	71700	18600	108000	87500	22700	108000	87500	22700	108000	100000	26000	129000
	319000	82500	479000	389000	101000	479000	389000	101000	479000	446000	116000	575000
7321	90500	23400	145000	110000	28600	145000	110000	28600	145000	127000	32800	174000
	403000	104000	647000	491000	127000	647000	491000	127000	647000	563000	146000	776000
5321	118000	30500	204000	144000	37200	204000	144000	37200	204000	165000	42700	244000
	523000	136000	906000	639000	165000	906000	639000	165000	906000	734000	190000	1090000
1922	…..	…..	…..	…..	…..	…..	18200	4720	28200	…..	…..	…..
	…..	…..	…..	…..	…..	…..	81200	21000	125000	…..	…..	…..
1022	…..	…..	…..	…..	…..	…..	35300	9150	50600	…..	…..	…..
	…..	…..	…..	…..	…..	…..	157000	40700	225000	…..	…..	…..
1222	43600	11300	67300	53200	13800	67300	55400	14400	71100	61900	16000	82300
	194000	50200	299000	237000	61300	299000	247000	63900	316000	275000	71300	366000
5222	79900	20700	147000	97600	25300	147000	102000	26300	155000	113000	29400	179000
	356000	92100	653000	434000	112000	653000	452000	117000	689000	505000	131000	798000
1322	72800	18900	107000	88900	23000	107000	88900	23000	107000	102000	26400	129000
	324000	83800	477000	395000	102000	477000	395000	102000	477000	453000	117000	572000
7322	99800	25800	161000	122000	31500	161000	122000	31500	161000	140000	36200	193000
	444000	115000	715000	542000	140000	715000	542000	140000	715000	621000	161000	858000
5322	138000	35700	244000	169000	43600	244000	169000	43600	244000	193000	50000	293000
	614000	159000	1090000	750000	194000	1090000	750000	194000	1090000	859000	223000	1300000
1924	…..	…..	…..	…..	…..	…..	23800	6160	37300	…..	…..	…..
	…..	…..	…..	…..	…..	…..	106000	27400	166000	…..	…..	…..
1024	…..	…..	…..	…..	…..	…..	37000	9590	55100	…..	…..	…..
	…..	…..	…..	…..	…..	…..	165000	42700	245000	…..	…..	…..
1224	49400	12800	77900	60300	15600	77900	62800	16300	82300	72500	18800	99600
	220000	56900	347000	268000	69500	347000	279000	72400	366000	323000	83500	443000
5224	97200	25200	186000	119000	30700	186000	124000	32000	196000	143000	36900	238000
	432000	112000	827000	528000	137000	827000	550000	142000	873000	634000	164000	1060000
1324	84600	21900	126000	103000	26700	126000	103000	26700	126000	118000	30700	151000
	376000	97400	562000	459000	119000	562000	459000	119000	562000	527000	136000	674000
7324	118000	30500	193000	144000	37300	193000	144000	37300	193000	165000	42700	232000
	524000	136000	861000	640000	166000	861000	640000	166000	861000	734000	190000	1030000
5324	170000	44100	310000	208000	53900	310000	208000	53900	310000	238000	61700	373000
	757000	196000	1380000	925000	240000	1380000	925000	240000	1380000	1060000	275000	1660000

Ratings 130 mm, 140 mm, 150 mm Bores

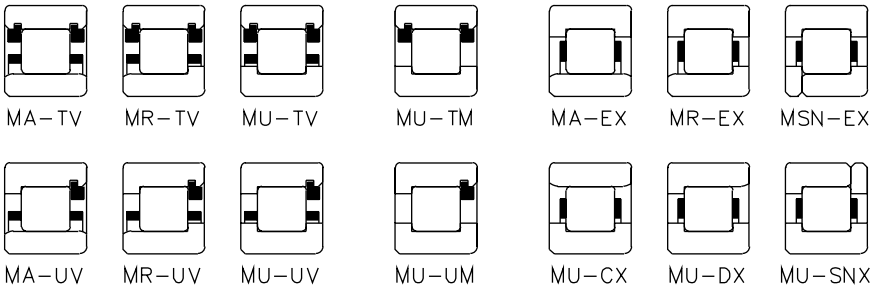

Separable — Non-Separable

Formed Steel Retainer — Full Roller Complement — Segmented Steel Retainer

Load Ratings (pounds/newtons)

Basic Bearing Number	Formed Steel Retainer						Segmented Steel Retainer			Full Roller Complement		
	Separable			Non-separable								
	C Basic Load Rating	Bearing Capacity 500 RPM, 3000 Hrs. L_{10}	Co Basic Static Load Rating	C Basic Load Rating	Bearing Capacity 500 RPM, 3000 Hrs. L_{10}	Co Basic Static Load Rating	C Basic Load Rating	Bearing Capacity 500 RPM, 3000 Hrs. L_{10}	Co Basic Static Load Rating	C Basic Load Rating	Bearing Capacity 500 RPM, 3000 Hrs. L_{10}	Co Basic Static Load Rating
1926	…..	…..	…..	…..	…..	…..	30100	7800	47600	…..	…..	…..
	…..	…..	…..	…..	…..	…..	134000	34700	212000	…..	…..	…..
1026	…..	…..	…..	…..	…..	…..	47500	12300	69100	…..	…..	…..
	…..	…..	…..	…..	…..	…..	211000	54700	307000	…..	…..	…..
1226	55300	14300	85200	67500	17500	85200	67500	17500	85200	78500	20300	104000
	246000	63700	379000	300000	77800	379000	300000	77800	379000	349000	90400	463000
5226	104000	26900	192000	127000	32800	192000	127000	32800	192000	147000	38200	234000
	462000	120000	852000	564000	146000	852000	564000	146000	852000	655000	170000	1040000
1326	100000	25900	151000	122000	31700	151000	122000	31700	151000	140000	36300	182000
	446000	115000	674000	544000	141000	674000	544000	141000	674000	624000	162000	808000
7326	138000	35700	228000	168000	43600	228000	168000	43600	228000	193000	50000	274000
	613000	159000	1020000	749000	194000	1020000	749000	194000	1020000	858000	222000	1220000
5326	190000	49300	346000	232000	60200	346000	232000	60200	346000	267000	69000	415000
	847000	219000	1540000	1030000	268000	1540000	1030000	268000	1540000	1190000	307000	1850000
1928	…..	…..	…..	…..	…..	…..	31100	8060	50800	…..	…..	…..
	…..	…..	…..	…..	…..	…..	138000	35900	226000	…..	…..	…..
1028	…..	…..	…..	…..	…..	…..	49900	12900	75100	…..	…..	…..
	…..	…..	…..	…..	…..	…..	222000	57400	334000	…..	…..	…..
1228	61700	16000	95000	75300	19500	95000	75300	19500	95000	87600	22700	116000
	274000	71100	422000	335000	86800	422000	335000	86800	422000	390000	101000	516000
5228	129000	33400	244000	157000	40700	244000	157000	40700	244000	183000	47300	299000
	573000	148000	1090000	699000	181000	1090000	699000	181000	1090000	813000	211000	1330000
1328	111000	28800	170000	136000	35200	170000	136000	35200	170000	156000	40400	204000
	495000	128000	756000	605000	157000	756000	605000	157000	756000	693000	180000	907000
7328	158000	40800	266000	192000	49800	266000	192000	49800	266000	221000	57100	319000
	701000	182000	1180000	856000	222000	1180000	856000	222000	1180000	981000	254000	1420000
5328	209000	54200	383000	256000	66200	383000	256000	66200	383000	293000	75900	460000
	931000	241000	1700000	1140000	295000	1700000	1140000	295000	1700000	1300000	338000	2050000
1930	…..	…..	…..	…..	…..	…..	41800	10800	68600	…..	…..	…..
	…..	…..	…..	…..	…..	…..	186000	48100	305000	…..	…..	…..
1030	…..	…..	…..	…..	…..	…..	56700	14700	85800	…..	…..	…..
	…..	…..	…..	…..	…..	…..	252000	65300	382000	…..	…..	…..
1230	71000	18400	111000	86700	22500	111000	86700	22500	111000	101000	26100	135000
	316000	81800	492000	386000	99900	492000	386000	99900	492000	448000	116000	601000
5230	150000	38900	289000	183000	47500	289000	183000	47500	289000	213000	55200	354000
	668000	173000	1290000	815000	211000	1290000	815000	211000	1290000	948000	245000	1570000

Ratings 160 mm, 170 mm, 180 mm, 190 mm, 200 mm Bores

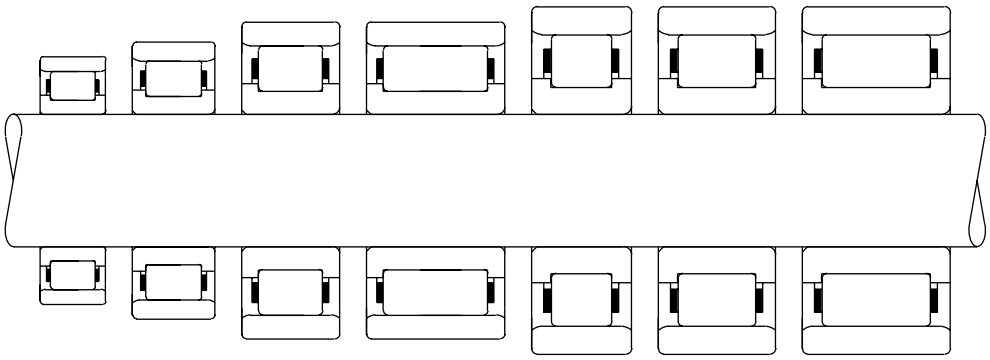

Size Relationship

Load Ratings (pounds/newtons)

Basic Bearing Number	Formed Steel Retainer						Segmented Steel Retainer			Full Roller Complement		
	Separable			Non-separable								
	C Basic Load Rating	Bearing Capacity 500 RPM, 3000 Hrs. L_{10}	Co Basic Static Load Rating	C Basic Load Rating	Bearing Capacity 500 RPM, 3000 Hrs. L_{10}	Co Basic Static Load Rating	C Basic Load Rating	Bearing Capacity 500 RPM, 3000 Hrs. L_{10}	Co Basic Static Load Rating	C Basic Load Rating	Bearing Capacity 500 RPM, 3000 Hrs. L_{10}	Co Basic Static Load Rating
1932	…..	…..	…..	…..	…..	…..	43200	11200	73100	…..	…..	…..
	…..	…..	…..	…..	…..	…..	192000	49800	325000	…..	…..	…..
1032	…..	…..	…..	…..	…..	…..	65000	16800	99800	…..	…..	…..
	…..	…..	…..	…..	…..	…..	289000	74800	444000	…..	…..	…..
1232	78300	20300	120000	95600	24800	120000	99800	25800	127000	112000	29000	148000
	348000	90200	534000	425000	110000	534000	444000	115000	565000	498000	129000	660000
5232	174000	45100	336000	213000	55100	336000	222000	57500	356000	249000	64600	415000
	775000	201000	1490000	946000	245000	1490000	988000	256000	1580000	1110000	287000	1850000
1934	…..	…..	…..	…..	…..	…..	43700	11300	75500	…..	…..	…..
	…..	…..	…..	…..	…..	…..	195000	50400	336000	…..	…..	…..
1034	…..	…..	…..	…..	…..	…..	81400	21100	130000	…..	…..	…..
	…..	…..	…..	…..	…..	…..	362000	93800	577000	…..	…..	…..
1234	95700	24800	149000	117000	30300	149000	122000	31600	158000	137000	35500	184000
	426000	110000	664000	520000	135000	664000	543000	141000	703000	609000	158000	820000
5234	202000	52400	391000	247000	64000	391000	258000	66800	414000	290000	75000	483000
	900000	233000	1740000	1100000	285000	1740000	1150000	297000	1840000	1290000	334000	2150000
1936	…..	…..	…..	…..	…..	…..	56000	14500	93700	…..	…..	…..
	…..	…..	…..	…..	…..	…..	249000	64500	417000	…..	…..	…..
1036	…..	…..	…..	…..	…..	…..	97900	25400	154000	…..	…..	…..
	…..	…..	…..	…..	…..	…..	436000	113000	685000	…..	…..	…..
1236	99600	25800	159000	122000	31500	159000	122000	31500	159000	136000	35300	186000
	443000	115000	708000	541000	140000	708000	541000	140000	708000	607000	157000	826000
5236	195000	50600	379000	239000	61800	379000	239000	61800	379000	268000	69400	442000
	870000	225000	1690000	1060000	275000	1690000	1060000	275000	1690000	1190000	309000	1970000
1938	…..	…..	…..	…..	…..	…..	56800	14700	97000	…..	…..	…..
	…..	…..	…..	…..	…..	…..	253000	65500	431000	…..	…..	…..
1038	…..	…..	…..	…..	…..	…..	100000	26000	161000	…..	…..	…..
	…..	…..	…..	…..	…..	…..	446000	115000	716000	…..	…..	…..
1238	143200	37000	239400	175400	45600	239400	190600	49300	267700	205000	53000	299000
	637000	164900	1065000	780000	203000	1065000	848000	219500	1191000	912000	236000	1330000
5238	242000	62800	489000	296000	76600	489000	296000	76600	489000	332000	86000	570000
	1080000	279000	2170000	1320000	341000	2170000	1320000	341000	2170000	1480000	383000	254000
1940	…..	…..	…..	…..	…..	…..	73700	19100	125000	…..	…..	…..
	…..	…..	…..	…..	…..	…..	328000	84900	556000	…..	…..	…..
1040	…..	…..	…..	…..	…..	…..	121000	31300	193000	…..	…..	…..
	…..	…..	…..	…..	…..	…..	538000	139000	859000	…..	…..	…..
1240	123000	31900	201000	150000	38900	201000	150000	38900	201000	175000	45200	246000
	547000	142000	893000	668000	173000	893000	668000	173000	893000	777000	201000	1090000
5240	270000	69900	551000	329000	85300	551000	329000	85300	551000	383000	99200	673000
	1200000	311000	2450000	1460000	379000	2450000	1460000	379000	2450000	1700000	441000	2990000

Shaft Bearing Seat Diameters

Bearing bore tolerances are in accordance with the system of tolerancing established by the International Standards Organization (ISO) and adopted by the American Bearing Manufacturers Association (ABMA) and the American National Standards Institute (ANSI).

A system of limits and fits has been established by ISO for shafts. A portion of this system has been adopted by ABMA to provide flexibility in selecting shaft fits. Shaft fits are designated by a lower case letter and a number, such as h6. The letter indicates the location of the shaft tolerance limits with respect to the nominal bearing bore. The number indicates the size of the tolerance zone.

Shaft fits recommended for various types of applications are listed in the table at right. A graphic relationship of various shaft fits is illustrated in the figure at the left.

Many factors influence the proper fit of the bearing inner ring on a shaft. The magnitude of the load and its direction with respect to bearing inner or outer rings are generally the first factors considered in shaft fit selection. The effects of other factors such as vibration, shock, temperature, speed, etc., are of secondary importance but sometimes need to be considered. Where assembly or disassembly requirements are of prime importance special shaft fits may be required.

Appropriate diameter shafting is determined (as shown) from the tables below.

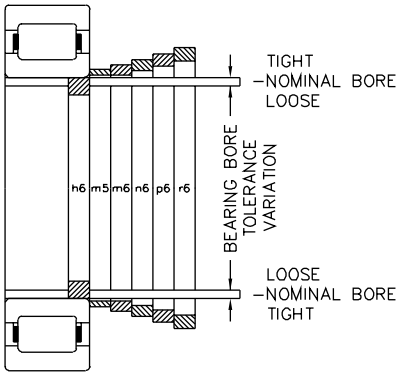

Class of Fit and Shaft Diameters (inches/µm)

Bearing Series,1000, 1200,1300, 1900,5200, 5300,7300	Nominal Bearing Bore And Shaft Diameter		Bearing Bore Tolerance ▲		Bearing/Shaft Diameter Fits ▲			
					H6		M5	
					Tolerance		Tolerance	
Basic Size	mm	inches	um	inches	Fit	Shaft Dia.	Fit	Shaft Dia.
					.0004T	–.0000	.0011T	0.0007
04	20.000	0.7874	0	0.0000	.0005L	–.0005	.0003T	0.0003
05	25.000	0.9843	–10	–.0004	10T	0	27T	17
06	30.000	1.1811			13L	–13	8T	8
07	35.000	1.3780			.0005T	0.0000	.0013T	0.0008
08	40.000	1.5748	0	0.0000	.0006L	–.0006	.0004T	0.0004
09	45.000	1.7717	–12	–.0005	12T	0	33T	20
10	50.000	1.9685			16L	–16	9T	9
11	55.000	2.1654						
12	60.000	2.3622			.0006T	0.0000	.0016T	0.001
13	65.000	2.5591	0	0.0000	.0007L	0.0007	.0005T	0.0005
14	70.000	2.7559	–15	–.0006	15T	0	39T	24
15	75.000	2.9528			19L	–19	11T	11
16	80.000	3.1496						
17	85.000	3.3465						
18	90.000	3.5433			.0008T	–.0000	.0019T	0.0011
19	95.000	3.7402	0	0.0000	.0009L	–.0009	.0005T	0.0005
20	100.000	3.9370	–20	–.0008	20T	0	48T	28
21	105.000	4.1339			22L	–22	13T	13
22	110.000	4.3307						
24	120.000	4.7244						
26	130.000	5.1181						
28	140.000	5.5118			.0010T	–.0000	.0023T	0.0013
30	150.000	5.9055	0	0.0000	.0010L	–.0010	.0006T	0.0006
32	160.000	6.2992	–25	–.0010	25T	0	58T	33
34	170.000	6.6929			25L	–25	15T	13
36	180.000	7.0866						
					.0012T	0.000	.0026T	0.0014
38	190.000	7.4803	0	0.0000	.0012L	–.0012	.0006T	0.0006
40	200.000	7.8740	–30	–.0012	30T	0	67T	37
					29L	–29	17T	17

Class of Fit Selection

Operating conditions ■	Nominal shaft dia. mm	Nominal shaft dia. inches	Class of fit	Remarks
Inner ring stationary in relation to direction of load	*All diameters*		h6	Tap fit inner ring
Inner ring rotating in relation to direction of load (Normal load m=0.18C)●	*17-40*	0.67-1.57	m5	Press fit inner ring
	40-65	1.57-2.56	m6	
	65-140	2.56-5.52	n6	
	140-200	5.52-7.88	p6	
Inner ring rotating in relation to direction of load (Heavy load >.018C)●	*35-65*	1.37-2.56	n6	Heavy press fit inner ring
	65-140	2.56-5.52	p6	
	140-200	5.52-7.88	r6	

Bearing/Shaft Diameter Fit

Bearng Series 1000, 1200, 1300, 1900, 5200, 5300, 7300	m6 Tolerance		n6 Tolerance		p6 Tolerance		r6 Tolerance	
Basic size	Fit	Shaft dia.	Fit	Shaft dia.	Fit	Shaft dia.	Fit	Shaft dia.
04	.....	.....	.....	.....	.....	.....	.....	.....
05	.....	.....	.....	.....	.....	.....	.....	.....
06	.....	.....	.....	.....	.....	.....	.....	.....
07	.0015T	0.0010	.0018T	0.0013	.....	.....	.....	.....
thru	.0004T	0.0004	.0007T	0.0007	.....	.....	.....	.....
10	38T	25	46T	33	.....	.....	.....	.....
	9T	9	17T	17	.....	.....	.....	.....
11	.0018T	0.0012	.0021T	0.0015	.0027T	0.0021	.....	.....
thru	.0005T	0.0005	.0008T	0.0008	.0014T	0.0014	.....	.....
16	45T	30	54T	39	66T	51	.....	.....
	11T	11	20T	20	32T	32	.....	.....
17	.0022T	0.0014	.0027T	0.0019	.0033T	0.0025	.0037T	0.0029
thru	.0005T	0.0005	.0010T	0.0010	.0016T	0.0016	.0020T	0.0020
24	55T	35	65T	45	79T	59	96T	76
	13T	13	23T	23	37T	37	54T	54
26	.0026T	0.0016	.0032T	0.0022	.0038T	0.0028	.0045T	0.0035
thru	.0006T	0.0006	.0012T	0.0012	.0018T	0.0018	.0025T	0.0025
36	65T	40	77T	52	93T	68	118T	93
	15T	15	27T	27	43T	43	68T	68
	.0030T	0.0018	.0038T	0.0026	.0044T	0.0032	.0054T	0.0042
38	.0006T	0.0006	.0014T	0.0014	.0020T	0.0020	.0030T	0.0030
40	76T	46	90T	60	109T	79	136T	106
	17T	17	31T	31	50T	50	77T	77

⚠ Symbol L indicates a loose or clearance fit. Symbol T indicates a tight or interference fit. The appropriate shaft diameter for any class of fit can be easily determined by applying the shaft tolerance to the nominal shaft diameter. Example: (Using basic bearing size 03 and fit class h6)

	inches		mm
Nominal shaft diameter	= .6693	.6693	= 17.000 17.000
Shaft diameter tolerance	= +.0000	–.0004	= + 0.000 –0.010
Resultant shaft diameter	= .6693	.6689	= 17.000 16.989

1µm = .001 mm

■ For solid steel shafts.

● C = Basic Load Rating of bearing.

▲ The arithmetical mean of the largest and smallest single diameter to be within tolerance shown. Allowable deviations from mean diameter per ANSI/ABMA STD 20, latest printing.

Housing Bearing Seat Diameters

Bearing outside diameter tolerances are in accordance with the system of tolerancing established by the International Standards Organization (ISO) and adopted by the American Bearing Manufacturers Association (ABMA) and the American National Standards Institute (ANSI).

A system of limits and fits has been established by ISO for holes. A portion of this system has been adopted by ABMA to provide flexibility in selecting housing fits. Housing fits are designated by a capital letter and a number such as H7. The letter indicates the location of the housing bore tolerance limits with respect to the nominal bearing O.D. The number indicates the size of the tolerance zone.

Housing fits recommended for various types of applications are listed in the table at the right. A graphic relationship of various housing fits is illustrated in the figure at the left. The class of fit is determined by nature of loading (oscillating, vibrating, reversing, etc.), axial movement requirements, temperature conditions, housing material and cross section of housing.

Shaft expansion increases bearing center distances and requires all but one bearing on a shaft to be movable axially in the housing. In most bearings the outer rings are subjected to stationary loads which permit a loose housing fit.

Operating temperature may affect the housing fit, as the housing may dissipate heat rapidly and not expand with the outer ring. However, the loose fit must never be greater than necessary. Excessive looseness results in less accurate shaft centering and additional ring deformation under load.

The appropriate housing bores are determined (as shown) from the tables below.

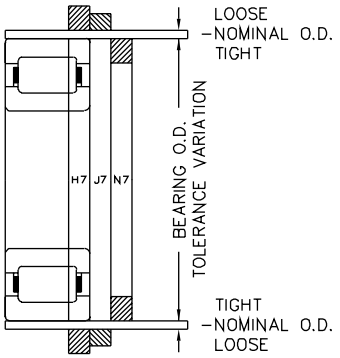

Class of Fit and Housing Bores (inches/µm)

Bearing Series 1900	1000	1200 / 5200	1300 / 5300 / 7300	Nominal Bearing O.D. And Housing Bore (Basic Size) mm	inches	Bearing O.D. ToleranceΔ	Bearing/Housing Diameter Fits ▲ H7 Tolerance Fit	H7 Housing Bore	J7 Tolerance Fit	J7 Housing Bore	N7 Tolerance Fit	N7 Housing Bore
…	…	205	304	52	2.0472	0	0	0	.0004T	-0.0004	.0002L	-0.0003
…	…	206	305	62	2.4409	–.0005	.0017L	0.0012	.0013L	≠.0008	.0015T	-0.0015
…	…	207	306	72	2.8346	*0*	*0*	*0*	*12T*	*-12*	*4L*	*-9*
911	010	208	307	80	3.1496	*–13*	*43L*	*30*	*31L*	*-18*	*39T*	*-39*
912	…	209	…	85	3.3465							
913	011	210	308	90	3.5433							
…	012	…	…	95	3.7402	0	0	0	.0005T	-0.0005	.0002L	-0.0004
914	013	211	309	100	3.9370	–.0006	.0020L	0.0014	.0015L	0.0009	.0018T	-0.0018
915	…	…	…	105	4.1339	*0*	*0*	*0*	*13T*	*-13*	*5L*	*-10*
916	014	212	310	110	4.3307	*–15*	*50L*	*35*	*37L*	*22*	*45T*	*-45*
…	015	…	…	115	4.5276							
917	…	213	311	120	4.7244							
918	016	214	…	125	4.9213	0	0	0	.0006T	-0.0006	.0002L	-0.0006
919	017	215	312	130	5.1181	–.0008	.0024L	0.0016	.0018L	0.0010	.0022T	-0.0002
920	018	216	313	140	5.5118	*0*	*0*	*0*	*14T*	*-14*	*6L*	*-12*
921	019	…	…	145	5.7087	*–20*	*61L*	*41*	*44L*	*26*	*52T*	*-52*
922	020	217	314	150	5.9055							
…	021	218	315	160	6.2992	0	0	0	.0006T	-0.0006	.0004L	-0.0006
924	…	…	…	165	6.4961	–.0010	.0026L	0.0016	.0020L	0.001	.0022T	-0.0022
…	022	219	316	170	6.6929	*0*	*0*	*0*	*14T*	*-14*	*13L*	*-12*
926	024	220	317	180	7.0866	*–25*	*65L*	*40*	*51L*	*26*	*57T*	*-52*
928	…	221	318	190	7.4803							
…	026	222	319	200	7.8740							
930	028	…	…	210	8.2677	0	0	0	.0007T	-0.0007	.0004L	-0.0008
…	…	224	320	215	8.4646	-0.0012	.0030L	0.0018	.0023L	0.0011	.0026T	-0.0026
932	…	…	321	220	8.6614	*0*	*0*	*0*	*16T*	*-16*	*16L*	*-14*
…	030	…	…	225	8.8583	*-30*	*76L*	*46*	*60L*	*30*	*60T*	*-60*
934	…	226	322	230	9.0551							
…	032	…	…	240	9.4488							
936	…	228	…	250	9.8425							
938	034	…	324	260	10.2362	0	0	0	.0007T	-0.0007	.0006L	-0.0008
…	…	230	…	270	10.6299	–.0014	.0034L	0.002	.0027L	0.0013	.0028T	-0.0028
940	036	…	326	280	11.0236	*0*	*0*	*0*	*16T*	*-16*	*21L*	*-14*
…	038	232	…	290	11.4173	*–35*	*87L*	*52*	*71L*	*36*	*66T*	*-66*
…	…	…	328	300	11.8110							
…	040	234	…	310	12.2047							
							0	0	.0007T	-0.0007	.0008L	-0.0008
…	…	236	330	320	12.5984	–.0016	.0038L	0.0022	.0030L	0.0014	.0030T	-0.003
…	…	238	…	340	13.3858	*0*	*0*	*0*	*8T*	*-18*	*24L*	*-16*
…	…	240	…	360	14.1732	*–40*	*97L*	*57*	*79L*	*39*	*73T*	*-73*

1 µm = .001 mm

□ Minimum housing bore is same as ABMA fit class; tolerance is within ABMA range.

■ Style A outer ring has oversize O.D. designed to give a heavy press fit with a tap fit housing bore. Inner ring to be press fit for values.

Δ The arithmetical mean of the largest and smallest single diameter to be within tolerance shown.
Allowable deviations from mean diameter per ANSI/ABMA STD 20, latest printing.

Class of Fit Selection

Operating conditions	Class of fit	Remarks
Housing stationary in relation to direction of load	H7	Push fit outer ring for non-separable bearing styles MU…UV and MU…UM
Housing stationary in relation to direction of load	J7□	Tap fit outer ring
Housing rotating in relation to direction of load	N7□	Press fit outer ring
	■	Heavy press fit with Style A outer ring

Heavy Press Fit With Style A Outer Ring (inches/µm)

Bearing Series 1900	1000	1200 5200	1300 5300 7300	Nominal Bearing O.D. And Housing Bore Style A Outer Ring mm	inches	Bearing O.D. ToleranceΔ	Bearing/Housing Diameter Fits ▲ Tolerance Fit		Housing Bore	
Basic Size										
...	...	205	304	52.024	2.0482	0.0000	.00000	0	–.0005	–13
						–.0005	.0014T	35T	–.0014	–35
...	...	206	305	62.029	2.4421	0	.0001T	2T	–.0006	–15
						–13	.0016T	40T	–.0016	–40
		207	306	72.032	2.8359		.0002T	5T	–.0007	–18
							.0017T	43T	–.0017	–43
911	010	208	307	80.035	3.151		.0003T	7T	–.0008	–20
							.0018T	45T	–.0018	–45
912	...	209	...	85.039	3.348		.0004T	10T	–.0010	–25
							.0020T	50T	–.0020	–50
913	011	210	308	90.04	3.5449		.0005T	13T	–.0011	–28
							.0021T	53T	–.0021	–53
...	012	...	...	95.044	3.7419	0.0000	.0006T	15T	–.0012	–30
						–.0006	.0022T	56T	–.0022	–56
914	013	211	309	100.046	3.9388	0	.0007T	18T	–.0013	–33
						–15	.0023T	58T	–.0023	–58
915	...	...	...	105.049	4.1358		.0008T	20T	–.0014	–35
							.0024T	61T	–.0024	–61
916	014	212	310	110.056	4.3329		.0009T	23T	-.0017	-38
	015	…	…	115.057	4.5298		.0027T	69T	-.0027	-69
917	…	213	311	120.056	4.7266					
918	016	214	…	125.059	4.9236	0.0000	.0009T	23T	-.0017	-43
919	017	215	312	130.058	5.1204	-0.0008	.0029T	74T	-.0029	-74
920	018	216	313	140.058	5.5141					
921	019	…	…	145.067	5.7113	0	.0010T	25T	-.0018	-45
922	020	217	314	150.066	5.9081	-20	.0032T	81T	-.0032	-81
…	021	218	315	160.071	6.302	0.0000	.0010T	25T	-.0020	-50
924	...	...	...	165.072	6.4989	–.0010	.0034T	86T	–.0034	–86
...	022	219	316	170.071	6.6957	0				
926	024	220	317	180.071	7.0894	–25				
928	...	221	318	190.076	7.4833	0	.0011T	28T	–.0023	–58
...	026	222	319	200.078	7.8771	–.0012	.0037T	94T	–.0037	–94
							.0012T	30T	–.0024	–60
930	028	...	...	210.081	8.2709		.0038T	97T	–.0038	–97
							.0013T	33T	–.0025	–63
...	...	224	320	215.087	8.468		.0039T	99T	–.0039	–99
932	...	...	...	220.088	8.6649		.0013T	33T	–.0025	–63
...	030	...	321	225.09	8.8618		.0041T	104T	–.0041	–104
						0	.0014T	36T	–.0026	–66
934	...	226	...	230.091	9.0587	–30	.0042T	107T	–.0042	–107
...	032	...	322	240.096	9.4526		.0015T	38T	–.0027	–68
936	...	228	...	250.096	9.8463		.0043T	109T	–.0043	–109
							.0015T	38T	–.0027	–68
							.0045T	114T	–.0045	–114
938	034	…	324	260.101	10.2402	0.0000	.0015T	38T	-.0029	-73
…	…	230	…	270.101	10.6339	-0.0014	.0047T	119T	-.0047	-119
940	036	…	326	280.101	11.0276	0	.0016T	41T	-.0030	-76
…	038	232	…	290.109	11.4216	-35	.0050T	127T	-.0050	-127
…	…	…	328	300.111	11.8154		.0017T	43T	-.0031	-78
…	040	234	…	310.111	12.2091		.0051T	130T	-.0051	-130
…	…	236	330	320.121	12.6032	0.0000	.0017T	43T	-.0033	-83
…	…	238	…	340.121	13.3906	-0.0016	.0055T	140T	-.0055	-140
…	…	240	…	360.124	14.1781	0	.0018T	46T	-.0043	-86
						-40	.0056T	142T	-.0056	-142

▲Symbol L indicates a loose or clearance fit. Symbol T indicates a tight or interference fit. The appropriate housing bore for any class of fit can be easily determined by applying the housing tolerance to the nominal housing bore. Example: (Using basic bearing size 926 and fit class N7)

	inches	mm
Nominal housing bore	= 7.0866 7.0866	= 180.000 180.000
Housing bore tolerance	= – .0006 – .0022	= –.012 –.052
Resultant housing bore	= 7.0860 7.0844	= 179.988 179.948

Operation Without Inner Ring/Outer Ring

Outer Ring and Roller Assembly

for Series M-EX, M-EAX, M-EB, M-EAB, M-TV, M-TAV, M-UV and M-UAV

Cylindrical roller bearings with the inner ring omitted may be installed so that the rollers operate directly on the surface of the shaft.

This type of design is useful for applications where space is limited or a larger shaft is required. Surface hardness of shaft must be Rockwell C59 to C64 to achieve full bearing capacity. Where the required hardness cannot be attained, the bearing rating must be reduced accordingly. Where the shaft is case hardened, the combination of case depth and core hardness must be adequate. Consult Rexnord Bearing Division for a specific recommendation. Shaft surface should be finished to a roughness value of 13 micro-inches, RMS, maximum (.33 µm).

Maximum and minimum shaft diameter values for tap fit and press fit outer rings are listed below.

Hardness Factor

If operation at rated capacity is desired when cylindrical roller bearings are used with either ring omitted, the surface on which the rollers operate must have a hardness of Rockwell C59 to C64 or equivalent Brinell hardness (see chart below). If this hardness cannot be attained, the bearing C capacity must be reduced by a rating reduction factor determined from chart on facing page.

Inner Ring and Roller Assembly

for Series MU-X, MU-B

Cylindrical roller bearings with the outer ring omitted may be installed so that the rollers operate directly on the hardened and ground surface of a bore in an alloy steel housing.

This type of design is useful for applications where space is limited and a smaller housing bore or a larger bearing and shaft are required. Housing surface hardness must be Rockwell C59 to C64 or Brinell equivalent to achieve full bearing capacity. Where the required hardness cannot be attained, the bearing rating must be reduced accordingly. See graph for rating reduction factor. Where the housing bore is case hardened, the combination of case depth and core hardness must be adequate. Consult Rexnord Bearing Division for a specific recommendation. Housing surface should be finished to a roughness value of 13 micro-inches, A.A., maximum (.33 µm).

Maximum and minimum housing bore values for tap fit and press fit inner rings are listed on the next page.

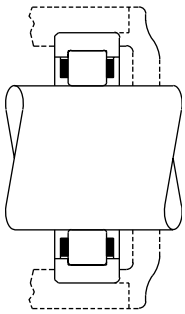

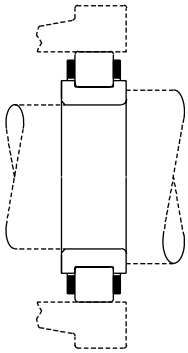

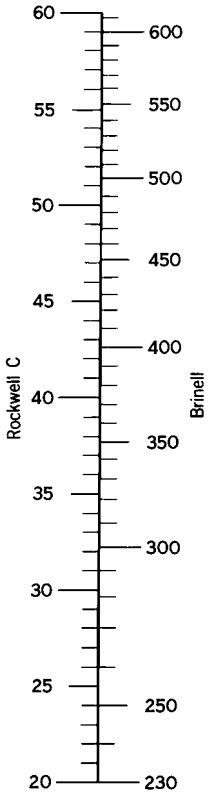

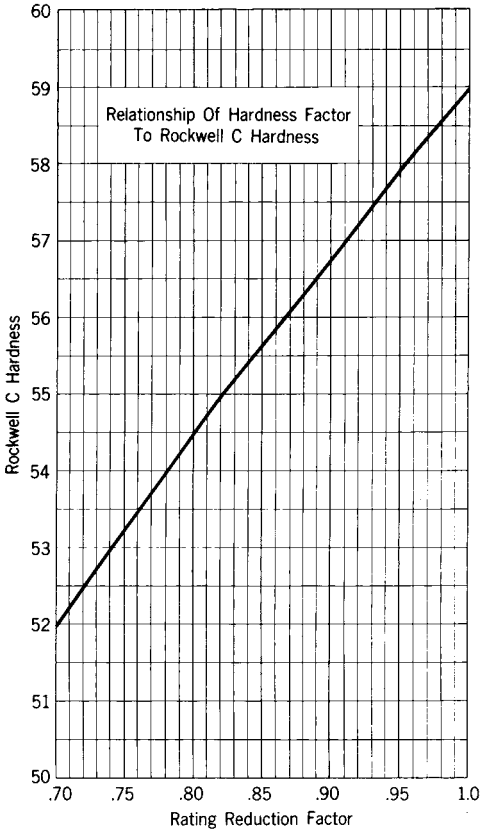

Shaft Diameters for Outer Ring

	Shaft Diameter for Tap Fit Outer Ring ▲								Shaft Diameter for Press Fit Outer Ring							
Bearing series	1900		1000		1200-5200		1300-5300-7300		1900		1000		1200-5200		1300-5300-7300	
Basic size	(max-min)							inches	(max-min)							
03	.....	.....	0.8757	0.8753	0.8725	0.8721	0.9803	0.9799	.....	.....	0.8750	0.8746	0.8718	0.8714	0.9796	0.9792
04	0.9769	0.9765	1.0329	1.0325	1.1092	1.1087	1.1013	1.1008	0.9762	0.9758	1.0322	1.0318	1.1085	1.1080	1.1005	1.1000
05	1.1759	1.1754	1.2259	1.2254	1.2672	1.2667	1.3383	1.3378	1.1753	1.1748	1.2253	1.2248	1.2665	1.2660	1.3376	1.3371
06	1.3710	1.3705	1.4523	1.4518	1.4994	1.4989	1.6024	1.6019	1.3704	1.3699	1.4515	1.4510	1.4986	1.4981	1.6016	1.6011
07	1.6112	1.6107	1.6611	1.6606	1.7322	1.7317	1.8452	1.8447	1.6104	1.6099	1.6603	1.6598	1.7314	1.7309	1.8444	1.8439
08	1.8061	1.8056	1.8777	1.8772	1.9667	1.9662	2.0600	2.0595	1.8054	1.8049	1.8770	1.8765	1.9660	1.9655	2.0590	2.0585
09	2.0263	2.0258	2.0831	2.0825	2.1870	2.1864	2.3382	2.3376	2.0255	2.0250	2.0823	2.0817	2.1861	2.1855	2.3373	2.3367
10	2.2014	2.2008	2.2802	2.2796	2.3816	2.3810	2.5660	2.5654	2.2006	2.2000	2.2794	2.2788	2.3807	2.3801	2.5651	2.5645
11	2.4316	2.4310	2.5408	2.5402	2.6354	2.6348	2.8136	2.8130	2.4308	2.4302	2.5398	2.5392	2.6344	2.6338	2.8127	2.8121
12	2.6316	2.6310	2.7377	2.7371	2.8511	2.8505	3.0545	3.0538	2.6307	2.6301	2.7368	2.7362	2.8502	2.8496	3.0534	3.0527
13	2.8267	2.8261	2.9348	2.9341	3.1677	3.1670	3.2957	3.2950	2.8258	2.8252	2.9339	2.9332	3.1668	3.1661	3.2946	3.2939
14	3.0719	3.0712	3.1588	3.1581	3.3392	3.3385	3.5132	3.5125	3.0710	3.0703	3.1579	3.1572	3.3381	3.3374	3.5120	3.5113
15	3.2669	3.2662	3.3569	3.3562	3.5063	3.5056	3.7780	3.7772	3.2660	3.2653	3.3560	3.3553	3.5052	3.5045	3.7769	3.7761
16	3.4619	3.4612	3.5969	3.5962	3.7532	3.7525	4.0031	4.0023	3.4610	3.4603	3.5958	3.5951	3.7520	3.7513	4.0020	4.0012
17	3.7274	3.7267	3.7944	3.7936	4.0182	4.0174	4.2746	4.2738	3.7265	3.7258	3.7933	3.7925	4.0171	4.0163	4.2735	4.2727
18	3.9225	3.9217	4.0324	4.0316	4.2235	4.2227	4.4915	4.4907	3.9214	3.9206	4.0313	4.0305	4.2224	4.2216	4.4902	4.4894
19	4.1174	4.1166	4.2284	4.2276	4.4714	4.4706	4.8113	4.8105	4.1163	4.1155	4.2273	4.2265	4.4703	4.4695	4.8099	4.8091
20	4.3330	4.3322	4.4254	4.4246	4.7663	4.7655	5.1267	5.1258	4.3319	4.3311	4.4243	4.4235	4.7652	4.7644	5.1254	5.1245

Housing Bore for Outer Ring

	Housing Bore for Tap Fit Inner Ring								Housing Bore for Press Fit Inner Ring							
Bearing series	1900		1000		1200-5200		1300-5300-7300		1900		1000		1200-5200		1300-5300-7300	
Basic size	(max-min)							inches	(max-min)							
03	.....	.....	1.1992	1.1988	1.3708	1.3704	1.5402	1.5398	……	.....	1.1996	1.1992	1.3712	1.3708	1.5406	1.5402
04	1.2689	1.2685	1.4383	1.4379	1.6075	1.6070	1.7305	1.7300	1.2694	1.2690	1.4388	1.4384	1.6080	1.6075	1.7309	1.7304
05	1.4680	1.4675	1.6314	1.6309	1.7656	1.7651	2.1031	2.1026	1.4686	1.4681	1.6320	1.6315	1.7661	1.7656	2.1036	2.1031
06	1.6631	1.6626	2.9090	1.9085	2.1285	2.1280	2.3780	2.3775	1.6637	1.6632	1.9096	1.9091	2.1291	2.1286	2.3785	2.3780
07	1.9346	1.9341	2.1594	2.1589	2.4591	2.4586	2.6745	2.6740	1.9353	1.9348	2.1600	2.1595	2.4597	2.4592	2.6751	2.6746
08	2.2116	2.2111	2.3760	2.3755	2.7405	2.7400	3.0572	3.0567	2.2123	2.2118	2.3767	2.3762	2.7411	2.7406	3.0578	3.0573
09	2.4317	2.4312	2.6430	2.6424	2.9517	2.9511	3.3894	3.3888	2.4325	2.4320	2.6438	2.6432	2.9526	2.9520	3.3902	3.3896
10	2.6068	2.6062	2.8400	2.8394	3.1311	3.1305	3.7195	3.7189	2.6077	2.6071	2.8409	2.8403	3.1319	3.1313	3.7203	3.7197
11	2.8881	2.8875	3.1697	3.1691	3.4646	3.4640	4.0784	4.0778	2.8892	2.8886	3.1707	3.1701	3.4656	3.4650	4.0793	4.0787
12	3.0882	3.0876	3.3668	3.3662	3.8481	3.8475	4.4280	4.4273	3.0893	3.0887	3.3678	3.3672	3.8491	3.8485	4.4289	4.4282
13	3.2832	3.2826	3.5639	3.5632	4.1649	4.1642	4.7775	4.7768	3.2843	3.2837	3.5649	3.5642	4.1658	4.1651	4.7758	4.7778
14	3.6316	3.6309	3.9323	3.9316	4.3902	4.3895	5.0926	5.0919	3.6329	3.6322	3.9337	3.9330	4.3915	4.3908	5.0938	5.0931
15	3.8266	3.8259	4.1304	4.1297	4.5573	4.5566	5.4770	5.4762	3.8280	3.8273	4.1317	4.1310	4.5585	4.5578	5.4782	5.4774
16	4.0217	4.0210	Δ	Δ	4.9068	4.9061	5.8033	5.8025	4.0230	4.0223	Δ	Δ	4.9081	4.9074	5.8045	5.8037
17	4.3561	4.3554	4.6515	4.6507	5.2829	5.2821	6.1966	6.1958	4.3578	4.3571	4.6772	4.6764	5.2845	5.2837	6.1981	6.1973
18	4.5512	4.5504	5.0292	5.0284	5.5968	5.5960	6.5109	6.5101	4.5529	4.5521	5.0309	5.0301	5.5984	5.5976	6.5124	6.5116
19	4.7463	4.7455	5.2253	5.2245	5.9532	5.9524	6.8308	6.8300	4.7480	4.7472	5.2269	5.2261	5.9548	5.9540	6.8322	6.8314
20	5.1064	5.1056	Δ	Δ	6.3459	6.3451	7.2787	7.2778	5.1082	5.1074	Δ	Δ	6.3474	6.3466	7.2802	7.2793

For shaft diameters larger than above, consult Rexnord Bearing Division.

Δ For size, consult Rexnord Bearing Division.

▲ Shaft diameter limits also apply to Style A outer ring bearings.

■ Hultgren 10 mm ball penetrator; 3000 kg load.

□ Brale penetrator; 150 kg load.

25 mm, 30 mm, 35 mm, 40 mm Bores

Photo Shows an Unmounted Cylindrical Roller Bearing Assembly

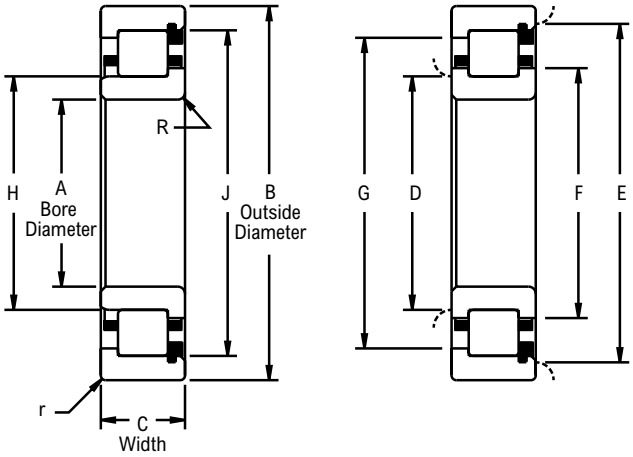

Product Features

- Fully crowned rollers
- Precision ground ribs
- Contoured roller pockets
- Rollers individually separated
- Optional full complement
- See Features and Benefits for additional info on page 472.

Bearing Dimensions

Basic Bearing Number	A Bore Diameter		B Outside Diameter		C Bearing Width		D		E		F	G	H	J	R	r
	mm	in	mm	in	mm	in	Plain	Ribbed	Plain	Ribbed						
1205	25.0000	0.9843	52.0000	2.0472	15.0000	0.5906	30.50	32.00	47.00	44.70	34.32	42.95	32.166	44.854	1.02	1.02
5205					20.6380	0.8125										
1305			62.0000	2.4409	17.0000	0.6693	31.50	33.80	55.90	53.30	37.49	50.14	33.972	53.426		
7305					21.0000	0.8268										
5305					25.4000	1.0000										
1206	30.0000	1.1811	62.0000	2.4409	16.0000	0.6299	36.10	37.80	56.40	53.80	40.87	51.48	38.062	54.074	1.02	1.02
5206					23.8120	0.9375										
1306			72.0000	2.8346	19.0000	0.7480	37.80	40.60	64.00	60.20	44.25	56.87	40.681	60.409	1.52	
7306					23.0000	0.9055										
5306					30.1620	1.1875										
1207	35.0000	1.3780	72.0000	2.8346	17.0000	0.6693	41.60	43.90	65.30	62.20	47.29	59.51	43.970	62.471	1.02	1.02
5207					26.9980	1.0629										
1307			80.0000	3.1496	21.0000	0.8268	43.70	46.70	71.40	67.80	50.67	64.46	46.843	67.942	1.52	1.52
7307					26.0000	1.0236										
5307					34.9250	1.3750										
1208	40.0000	1.5748	80.0000	3.1496	18.0000	0.7087	47.20	49.80	72.90	69.60	53.44	66.42	49.929	69.619	1.52	1.02
5208					30.1620	1.1875										
1308			90.0000	3.5433	23.0000	0.9055	49.00	52.10	81.30	77.50	57.00	73.33	52.299	77.663		1.52
7308					30.0000	1.1811										
5308					36.5120	1.4375										

Additional Notes

- Please call 1-866-REXNORD for availability
- Dimensions “R” & “r”, largest fillet radius that will clear bearing corners
- For the Selection Guide, Load Ratings and Speed Limits, see the Link-Belt Cylindrical Roller Bearing Engineering section on pages 474 - 489.
- For shaft and housing bearing seat diameters, see Link-Belt Cylindrical Roller Bearing Shaft & Housing Seat Diameters section on pages 484 - 487.
- Note: Dimensions subject to change. Certified dimensions of ordered material furnished on request.

45 mm, 50 mm, 55 mm Bores

Photo Shows an Unmounted Cylindrical Roller Bearing Assembly

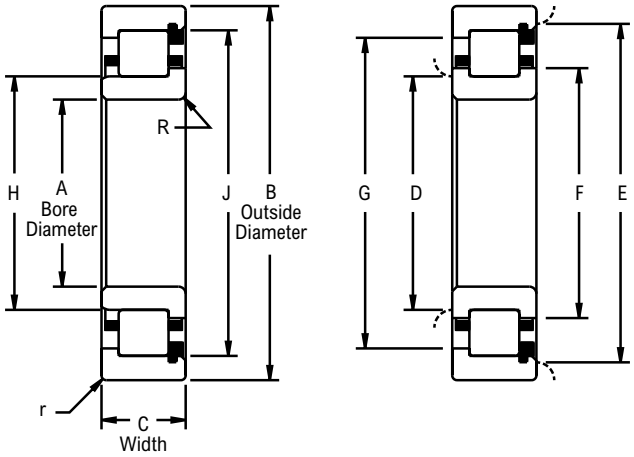

Product Features

- Fully crowned rollers
- Precision ground ribs
- Contoured roller pockets
- Rollers individually separated
- Optional full complement
- See Features and Benefits for additional info on page 472.

Bearing Dimensions

Basic Bearing Number	A Bore Diameter		B Outside Diameter		C Bearing Width		D		E		F	G	H	J	R	r
	mm	in	mm	in	mm	in	Plain	Ribbed	Plain	Ribbed						
1209	45.0000	1.7717	85.0000	3.3465	19.0000	0.7480	52.80	55.40	78.20	74.90	59.03	71.80	55.519	74.988	1.52	1.02
5209					30.1620	1.1875										
1309			100.0000	3.9370	25.0000	0.9843	55.90	59.20	90.40	85.80	64.31	81.48	59.362	86.103	2.03	1.52
7309					31.0000	1.2205										
5309					39.6880	1.5625										
1010	50.0000	1.9685	80.0000	3.1496	16.0000	0.6299	56.10	57.60	74.40	72.10	60.43	69.62	57.882	72.151	1.52	1.02
1210			90.0000	3.5433	20.0000	0.7874	57.60	60.40	82.80	79.50	63.96	76.66	60.460	79.545		
5210					30.1620	1.1875										
1310			110.0000	4.3307	27.0000	1.0630	61.00	65.00	99.10	94.50	70.64	89.36	65.146	94.490	2.03	2.03
7310					33.0000	1.2992										
5310					44.4500	1.7500										
1911	55.0000	2.1654	80.0000	3.1496	13.0000	0.5118	59.90	61.70	75.20	73.20	64.26	70.84	61.722	73.378	1.02	1.02
1011			90.0000	3.5433	18.0000	0.7087	62.00	64.30	83.60	80.50	67.69	77.34	64.496	80.531	1.52	
1211			100.0000	3.9370	21.0000	0.8268	64.00	66.80	91.40	87.90	70.74	84.53	66.901	88.019	2.03	1.52
5211					33.3380	1.3125										
1311			120.0000	4.7244	29.0000	1.1417	66.50	71.40	108.70	103.40	77.34	98.04	71.432	103.607		2.03
7311					36.0000	1.4173										
5311					49.2120	1.9375										

Additional Notes

- Please call 1-866-REXNORD for availability
- Dimensions “R” & “r”, largest fillet radius that will clear bearing corners
- For the Selection Guide, Load Ratings and Speed Limits, see the Link-Belt Cylindrical Roller Bearing Engineering section on pages 474 - 489.
- For shaft and housing bearing seat diameters, see Link-Belt Cylindrical Roller Bearing Shaft & Housing Seat Diameters section on pages 484 - 487.
- Note: Dimensions subject to change. Certified dimensions of ordered material furnished on request.

60 mm, 65 mm, 70 mm Bores

Photo Shows an Unmounted Cylindrical Roller Bearing Assembly

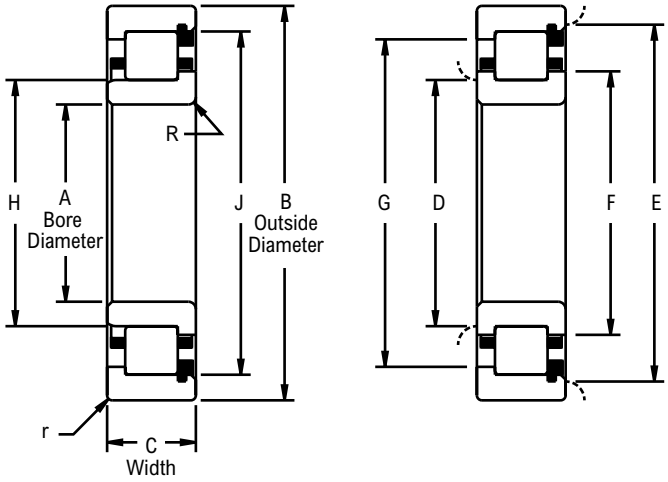

Product Features

- Fully crowned rollers
- Precision ground ribs
- Contoured roller pockets
- Rollers individually separated
- Optional full complement
- See Features and Benefits for additional info on page 472.

Bearing Dimensions

Basic Bearing Number	A Bore Diameter		B Outside Diameter		C Bearing Width		D		E		F	G	H	J	R	r
	mm	in	mm	in	mm	in	Plain	Ribbed	Plain	Ribbed						
1912	60.0000	2.3622	85.0000	3.3465	13.0000	0.5118	65.00	66.80	80.30	78.20	69.34	75.92	66.802	78.461	1.02	1.02
1012			95.0000	3.7402	18.0000	0.7087	67.00	69.30	88.60	85.30	72.69	82.35	69.499	85.534	1.52	
1212			110.0000	4.3307	22.0000	0.8661	69.30	72.10	101.30	97.50	76.94	93.50	72.380	97.762	2.03	1.52
5212					36.5120	1.4375										
1312			130.0000	5.1181	31.0000	1.2205	72.90	77.50	117.80	112.30	84.02	106.35	77.551	112.486	2.54	2.03
7312					38.0000	1.4961										
5312					53.9750	2.1250										
1913	65.0000	2.5591	90.0000	3.5433	13.0000	0.5118	70.10	71.60	85.30	83.30	74.30	80.87	71.755	83.416	1.02	1.02
1013			100.0000	3.9370	18.0000	0.7087	72.10	74.40	93.70	90.40	77.72	87.35	74.503	90.541	1.52	
1213			120.0000	4.7244	23.0000	0.9055	77.00	80.30	110.00	105.70	85.34	101.24	80.421	105.804	2.54	1.52
5213					38.1000	1.5000										
1313			140.0000	5.5118	33.0000	1.2992	78.70	83.60	127.00	121.20	90.70	114.68	83.675	121.366		2.03
7313					40.0000	1.5748										
5313					58.7380	2.3125										
1914	70.0000	2.7559	100.0000	3.9370	16.0000	0.6299	75.90	78.00	94.50	92.20	80.82	89.41	77.978	92.268	1.02	1.02
1014			110.0000	4.3307	20.0000	0.7874	77.50	80.00	103.40	99.80	84.12	95.99	80.188	99.906	2.03	
1214			125.0000	4.9213	24.0000	0.9449	81.80	84.60	115.60	111.50	89.61	107.01	84.772	111.536	2.54	1.52
5214					39.6880	1.5625										
1314			150.0000	5.9055	35.0000	1.3780	84.30	89.20	135.60	129.30	96.72	122.20	89.192	129.375	3.18	2.03
7314					43.0000	1.6929										
5314					63.6000	2.5039										

Additional Notes

- Please call 1-866-REXNORD for availability
- Dimensions “R” & “r”, largest fillet radius that will clear bearing corners
- For the Selection Guide, Load Ratings and Speed Limits, see the Link-Belt Cylindrical Roller Bearing Engineering section on pages 474 - 489.
- For shaft and housing bearing seat diameters, see Link-Belt Cylindrical Roller Bearing Shaft & Housing Seat Diameters section on pages 484 - 487.
- Note: Dimensions subject to change. Certified dimensions of ordered material furnished on request.

75 mm, 80 mm, 85 mm Bores

Photo Shows an Unmounted Cylindrical Roller Bearing Assembly

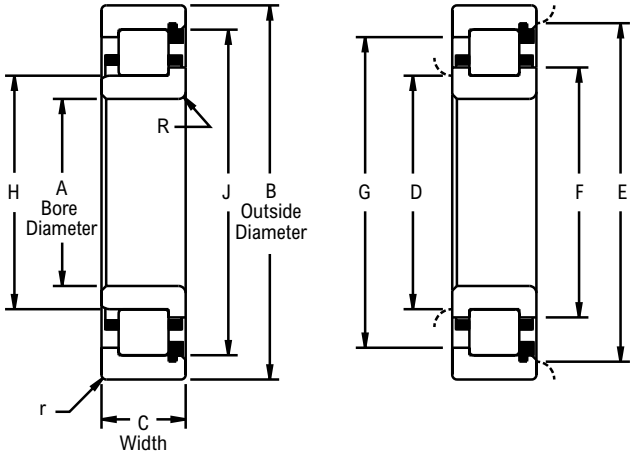

Product Features

- Fully crowned rollers
- Precision ground ribs
- Contoured roller pockets
- Rollers individually separated
- Optional full complement
- See Features and Benefits for additional info on page 472.

Bearing Dimensions

Basic Bearing Number	A Bore Diameter		B Outside Diameter		C Bearing Width		D		E		F	G	H	J	R	r
	mm	in	mm	in	mm	in	Plain	Ribbed	Plain	Ribbed						
1915	75.0000	2.9528	105.0000	4.1339	16.0000	0.6299	80.80	82.80	99.60	97.00	85.78	94.39	82.931	97.221	1.02	1.02
1015			115.0000	4.5276	20.0000	0.7874	82.60	85.10	108.40	104.90	89.15	101.02	85.217	104.938	2.03	
1215			130.0000	5.1181	25.0000	0.9843	85.60	88.90	120.10	115.60	93.85	111.25	89.014	115.781	2.54	1.52
5215					41.2750	1.6250										
1315			160.0000	6.2992	37.0000	1.4567	90.40	95.80	145.80	138.90	104.04	131.37	95.920	139.136	3.18	2.03
7315					46.0000	1.8110										
5315					68.2620	2.6875										
1916	80.0000	3.1496	110.0000	4.3307	16.0000	0.6299	85.80	87.90	104.40	102.10	90.73	99.34	87.884	102.176	1.02	1.02
1016			125.0000	4.9213	22.0000	0.8661	88.40	91.20	117.60	113.50	95.71	109.45	91.313	113.088	2.03	
1216			140.0000	5.5118	26.0000	1.0236	91.20	95.20	129.30	124.50	100.79	119.38	95.286	124.658	2.54	2.03
5216					44.4500	1.7500										
1316			170.0000	6.6929	39.0000	1.5354	96.00	101.60	154.40	147.30	110.29	139.19	101.636	147.424	3.18	
7316					49.0000	1.9291										
5316					68.2620	2.6875										
1917	85.0000	3.3465	120.0000	4.7244	18.0000	0.7087	92.20	94.50	113.80	101.50	97.82	107.47	94.615	110.678	1.52	1.02
1017			130.0000	5.1181	22.0000	0.8661	93.50	96.30	122.70	118.60	100.63	114.48	96.317	118.173	2.03	
1217			150.0000	5.9055	28.0000	1.1024	98.00	101.80	139.20	134.10	108.05	128.42	102.006	134.216	3.18	2.03
5217					49.2120	1.9375										
1317			180.0000	7.0866	41.0000	1.6142	102.90	108.40	164.30	157.20	118.24	148.64	108.522	157.422	3.96	2.54
7317					51.0000	2.0079										
5317					73.0250	2.8750										

Additional Notes

Please call 1-866-REXNORD for availability

Dimensions “R” & “r”, largest fillet radius that will clear bearing corners

For the Selection Guide, Load Ratings and Speed Limits, see the Link-Belt Cylindrical Roller Bearing Engineering section on pages 474 - 489.

For shaft and housing bearing seat diameters, see Link-Belt Cylindrical Roller Bearing Shaft & Housing Seat Diameters section on pages 484 - 487.

Note: Dimensions subject to change. Certified dimensions of ordered material furnished on request.

90 mm, 95 mm, 100 mm Bores

Photo Shows an Unmounted Cylindrical Roller Bearing Assembly

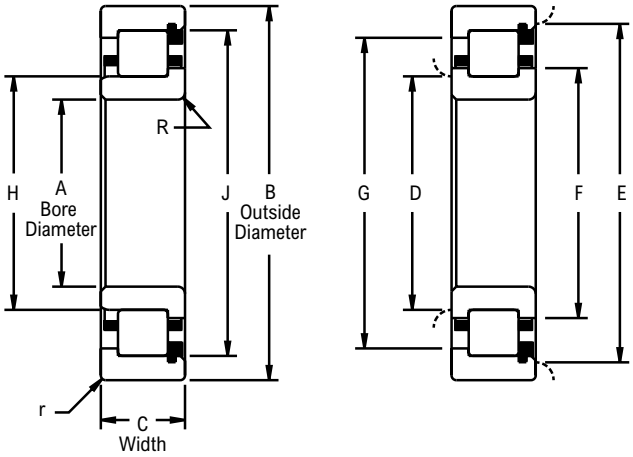

Product Features

- Fully crowned rollers
- Precision ground ribs
- Contoured roller pockets
- Rollers individually separated
- Optional full complement
- See Features and Benefits for additional info on page 472.

Bearing Dimensions

Basic Bearing Number	A Bore Diameter		B Outside Diameter		C Bearing Width		D		E		F	G	H	J	R	r
	mm	in	mm	in	mm	in	Plain	Ribbed	Plain	Ribbed						
1918	90.0000	3.5433	125.0000	4.9213	18.0000	0.7087	97.00	99.60	118.60	115.60	102.77	112.92	99.568	115.636	1.52	1.02
1018			140.0000	5.5118	24.0000	0.9449	99.60	102.40	131.60	127.80	107.42	122.71	102.362	127.775	2.54	1.52
1218			160.0000	6.2992	30.0000	1.1811	103.10	107.20	147.60	142.00	114.17	135.89	107.218	142.189	3.18	2.03
5218					52.3880	2.0625										
1318			190.0000	7.4803	43.0000	1.6929	108.20	113.80	172.70	165.40	124.33	156.16	114.031	165.047	3.96	2.54
7318					54.0000	2.1260										
5318					73.0250	2.8750										
1919	95.0000	3.7402	130.0000	5.1181	18.0000	0.7087	102.10	104.40	123.70	120.40	107.72	117.40	104.521	120.589	1.52	1.02
1019			145.0000	5.7087	24.0000	0.9449	104.40	107.20	136.60	132.60	112.40	127.68	107.340	132.756	2.54	1.52
1219			170.0000	6.6929	32.0000	1.2598	109.00	113.30	157.00	151.10	121.03	144.48	113.518	151.242	3.18	2.03
5219					55.5620	2.1875										
1319			200.0000	7.8740	45.0000	1.7717	115.10	121.90	181.90	173.50	132.46	164.29	122.154	173.530	3.96	2.54
7319					56.0000	2.2047										
5319					77.7780	3.0621										
1920	100.0000	3.9370	140.0000	5.5118	20.0000	0.7874	107.20	110.00	133.40	129.50	113.92	125.81	109.995	129.738	1.52	1.02
1020			150.0000	5.9055	24.0000	0.9449	109.50	112.30	141.70	137.70	117.52	132.59	112.344	137.759	2.54	1.52
1220			180.0000	7.0866	34.0000	1.3386	116.10	120.90	167.10	161.00	128.45	154.18	121.006	161.216	3.96	2.03
5220					60.3250	2.3750										
1320			215.0000	8.4646	47.0000	1.8504	122.40	130.00	194.60	184.60	140.46	175.06	130.165	184.907	4.75	2.54
7320					60.0000	2.3622										
5320					82.5500	3.2500										

Additional Notes

- Please call 1-866-REXNORD for availability
- Dimensions “R” & “r”, largest fillet radius that will clear bearing corners
- For the Selection Guide, Load Ratings and Speed Limits, see the Link-Belt Cylindrical Roller Bearing Engineering section on pages 474 - 489.
- For shaft and housing bearing seat diameters, see Link-Belt Cylindrical Roller Bearing Shaft & Housing Seat Diameters section on pages 484 - 487.
- Note: Dimensions subject to change. Certified dimensions of ordered material furnished on request.

105 mm, 110 mm, 120 mm Bores

Photo Shows an Unmounted Cylindrical Roller Bearing Assembly

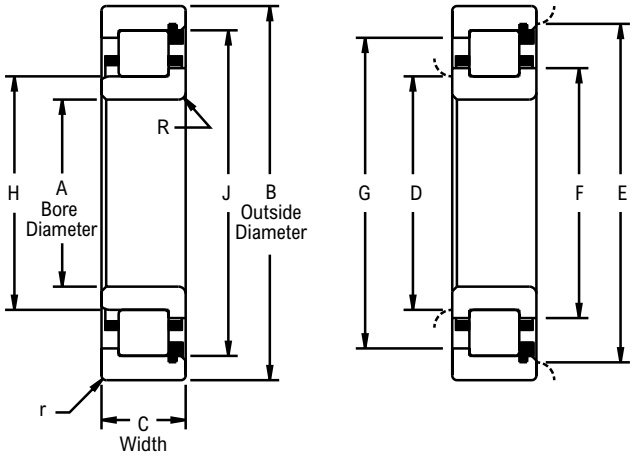

Product Features

- Fully crowned rollers
- Precision ground ribs
- Contoured roller pockets
- Rollers individually separated
- Optional full complement
- See Features and Benefits for additional info on page 472.

Bearing Dimensions

Basic Bearing Number	A Bore Diameter		B Outside Diameter		C Bearing Width		D		E		F	G	H	J	R	r
	mm	in	mm	in	mm	in	Plain	Ribbed	Plain	Ribbed						
1921	105.0000	4.1339	145.0000	5.7087	20.0000	0.7874	112.00	114.80	138.20	134.60	118.92	130.81	114.996	134.739	1.52	1.02
1021			160.0000	6.2992	26.0000	1.0236	115.80	119.10	150.10	145.80	124.48	140.61	119.151	145.941	2.54	2.03
1221			190.0000	7.4803	36.0000	1.4173	121.40	126.50	175.30	168.40	134.87	161.01	126.520	168.562	3.96	
5221					65.0880	2.5625										
1321			225.0000	8.8583	49.0000	1.9291	128.00	136.10	203.40	193.30	147.17	183.16	136.185	193.456	4.75	2.54
7321					63.0000	2.4803										
5321					87.3120	3.4375										
1922	110.0000	4.3307	150.0000	5.9055	20.0000	0.7874	117.10	119.90	143.20	139.70	123.93	135.81	119.995	139.741	1.52	1.02
1022			170.0000	6.6929	28.0000	1.1024	121.90	125.20	159.20	154.70	131.09	149.00	125.349	154.744	2.54	2.03
1222			200.0000	7.8740	38.0000	1.4961	127.20	132.80	183.90	176.00	141.60	168.43	132.951	176.192	3.96	
5222					69.8500	2.7500										
1322			240.0000	9.4488	50.0000	1.9685	135.90	145.00	217.20	206.20	157.48	195.38	145.255	206.337	4.75	2.54
7322					65.0000	2.5591										
5322					92.0750	3.6250										
1924	120.0000	4.7244	165.0000	6.4961	22.0000	0.8661	129.80	131.30	157.70	153.90	135.97	149.50	131.498	153.985	2.03	1.02
1024			180.0000	7.0866	28.0000	1.1024	132.10	135.10	169.20	164.60	141.22	158.90	135.357	164.754	3.18	2.03
1224			215.0000	8.4646	40.0000	1.5748	139.20	145.00	198.90	190.80	154.30	182.73	145.138	190.952	4.75	
5224					76.2000	3.0000										
1324			260.0000	10.2362	55.0000	2.1654	147.80	157.00	135.20	223.00	170.18	211.20	157.023	223.053	6.35	2.54
7324					71.0000	2.7953										
5324					104.7750	4.1250										

Additional Notes

Please call 1-866-REXNORD for availability

Dimensions “R” & “r”, largest fillet radius that will clear bearing corners

For the Selection Guide, Load Ratings and Speed Limits, see the Link-Belt Cylindrical Roller Bearing Engineering section on pages 474 - 489.

For shaft and housing bearing seat diameters, see Link-Belt Cylindrical Roller Bearing Shaft & Housing Seat Diameters section on pages 484 - 487.

Note: Dimensions subject to change. Certified dimensions of ordered material furnished on request.

130 mm, 140 mm, 150 mm Bores

Photo Shows an Unmounted Cylindrical Roller Bearing Assembly

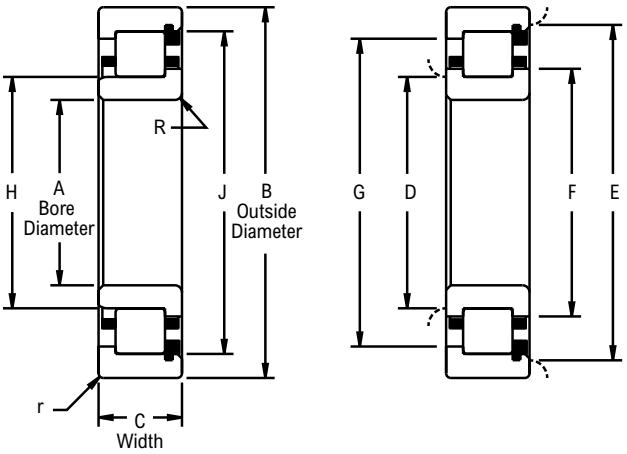

Product Features

- Fully crowned rollers
- Precision ground ribs
- Contoured roller pockets
- Rollers individually separated
- Optional full complement
- See Features and Benefits for additional info on page 472.

Bearing Dimensions

Basic Bearing Number	A Bore Diameter		B Outside Diameter		C Bearing Width		D		E		F	G	H	J	R	r
	mm	in	mm	in	mm	in	Plain	Ribbed	Plain	Ribbed						
1926	130.0000	5.1181	180.0000	7.0866	24.0000	0.9449	139.20	142.20	171.70	167.60	147.42	162.99	142.367	167.085	2.03	1.52
1026			200.0000	7.8740	33.0000	1.2992	143.00	147.60	188.20	182.40	154.56	175.59	147.574	182.570	3.18	2.03
1226			230.0000	9.0551	40.0000	1.5748	149.10	154.90	213.90	206.20	164.72	197.13	154.973	206.375	4.75	2.54
5226					79.3750	3.1250										
1326			280.0000	11.0236	58.0000	2.2835	160.30	170.40	254.50	242.60	184.91	229.77	170.536	242.755	6.35	3.18
7326					75.0000	2.9528										
5326					111.1250	4.3750										
1928	140.0000	5.5118	190.0000	7.4803	24.0000	0.9449	149.10	152.40	181.60	177.80	157.48	172.80	152.425	177.868	2.03	1.52
1028			210.0000	8.2677	33.0000	1.2992	153.70	157.50	198.10	192.50	164.54	185.60	157.556	192.557	3.96	2.03
1228			250.0000	9.8425	42.0000	1.6535	161.50	168.40	232.40	224.30	179.07	214.38	168.460	224.417	4.75	2.54
5228					82.5500	3.2500										
1328			300.0000	11.8110	62.0000	2.4409	172.00	181.60	271.30	258.10	196.98	244.35	181.684	258.082	7.92	3.18
7328					83.0000	3.2677										
5328					114.3000	4.5000										
1930	150.0000	5.9055	210.0000	8.2677	28.0000	1.1024	161.50	165.40	199.10	194.60	171.22	188.92	165.354	194.790	3.18	2.03
1030			225.0000	8.8583	35.0000	1.3780	164.30	168.60	212.30	206.20	176.20	198.93	168.681	206.454	3.96	
1230			270.0000	10.6299	45.0000	1.7717	174.20	181.40	251.00	241.80	193.04	231.01	181.544	241.854	6.35	2.54
5230					88.9000	3.5000										

Additional Notes

Please call 1-866-REXNORD for availability

Dimensions “R” & “r”, largest fillet radius that will clear bearing corners

For the Selection Guide, Load Ratings and Speed Limits, see the Link-Belt Cylindrical Roller Bearing Engineering section on pages 474 - 489.

For shaft and housing bearing seat diameters, see Link-Belt Cylindrical Roller Bearing Shaft & Housing Seat Diameters section on pages 484 - 487.

Note: Dimensions subject to change. Certified dimensions of ordered material furnished on request.

160 mm, 170 mm, 180 mm, 190 mm, 200 mm Bores

Photo Shows an Unmounted Cylindrical Roller Bearing Assembly

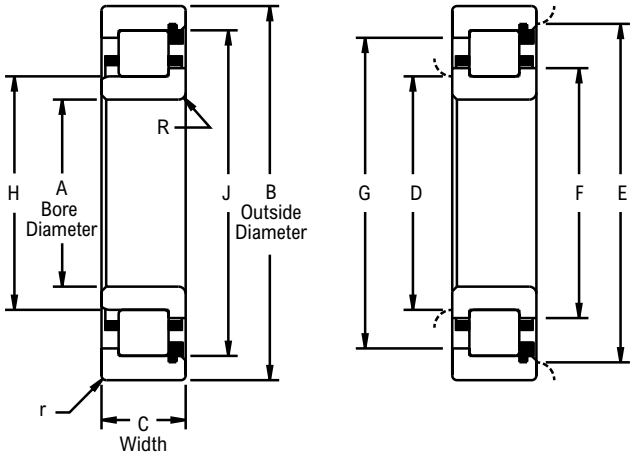

Product Features

- Fully crowned rollers
- Precision ground ribs
- Contoured roller pockets
- Rollers individually separated
- Optional full complement
- See Features and Benefits for additional info on page 472.

Bearing Dimensions

Basic Bearing Number	A Bore Diameter		B Outside Diameter		C Bearing Width		D		E		F	G	H	J	R	r
	mm	in	mm	in	mm	in	Plain	Ribbed	Plain	Ribbed						
1932	160.0000	6.2992	220.0000	8.6614	28.0000	1.1024	171.70	175.30	209.30	204.70	181.25	198.96	175.387	204.828	3.18	2.03
1032			240.0000	9.4488	38.0000	1.4961	175.50	179.80	226.60	220.00	187.96	212.17	179.934	220.193	3.96	
1232			290.0000	11.4173	48.0000	1.8898	185.70	193.50	269.50	259.60	205.87	247.83	193.634	259.705	6.35	2.54
5232					98.4250	3.8750										
1934	170.0000	6.6929	230.0000	9.0551	28.0000	1.1024	181.60	185.40	219.20	214.60	191.29	208.99	185.420	214.866	3.18	2.03
1034			260.0000	10.2362	42.0000	1.6535	188.20	193.30	244.10	236.50	202.31	227.81	193.421	236.710	4.75	
1234			310.0000	12.2047	52.0000	2.0472	197.10	205.20	287.50	277.60	219.08	264.74	205.483	277.734	6.35	3.18
5234					104.7750	4.1250										
1936	180.0000	7.0866	250.0000	9.8425	33.0000	1.2992	193.00	197.60	238.20	232.40	204.60	225.68	197.612	232.644	3.96	2.03
1036			280.0000	11.0236	46.0000	1.8110	199.60	205.50	262.90	254.50	215.34	244.80	205.588	254.551	4.75	
1236			320.0000	12.5984	52.0000	2.0472	207.50	216.20	298.20	288.50	229.87	275.56	216.289	288.544	6.35	3.18
5236					107.9500	4.2500										
1938	190.0000	7.4803	260.0000	10.2362	33.0000	1.2992	202.90	182.10	248.40	242.60	214.71	235.79	207.719	242.768	3.96	2.03
1038			290.0000	11.4173	46.0000	1.8110	209.60	215.40	272.80	264.40	225.93	254.23	215.595	264.576	4.75	
1238			340.0000	13.3858	55.0000	2.1654	220.10	229.10	320.37	309.63	244.11	290.48	229.276	309.723	7.42	3.18
5238					114.3000	4.5000										
1940	200.0000	7.8740	280.0000	11.0236	38.0000	1.4961	215.40	220.00	266.40	260.10	227.99	252.22	219.964	260.256	4.75	2.03
1040			310.0000	12.2047	51.0000	2.0079	221.00	227.60	291.30	282.40	238.61	271.58	227.686	282.506		
1240			360.0000	14.1732	58.0000	2.2835	232.40	242.10	334.50	322.60	257.43	308.20	242.197	322.651	7.92	3.18
5240					120.6500	4.7500										

Additional Notes

- Please call 1-866-REXNORD for availability
- Dimensions “R” & “r”, largest fillet radius that will clear bearing corners
- For the Selection Guide, Load Ratings and Speed Limits, see the Link-Belt Cylindrical Roller Bearing Engineering section on pages 474 - 489.
- For shaft and housing bearing seat diameters, see Link-Belt Cylindrical Roller Bearing Shaft & Housing Seat Diameters section on pages 484 - 487.
- Note: Dimensions subject to change. Certified dimensions of ordered material furnished on request.

25 mm thru 95 mm Bores

Photo Shows an Unmounted Cylindrical Roller Bearing Assembly

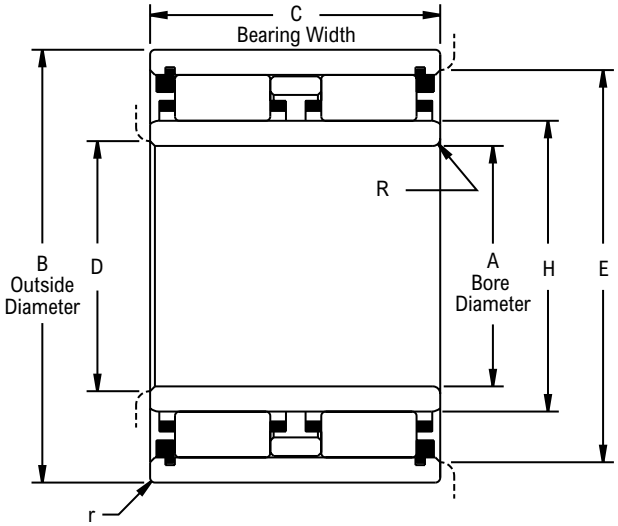

Product Features

- Double row
- Fully crowned rollers
- Contoured roller pockets
- Rollers individually separated
- See Features and Benefits for additional info on page 472.

Bearing Dimensions

Basic Bearing Number	A Bore Diameter		B Outside Diameter		C Bearing Width		D	E	H	J O.R. Raceway I.D.	R	r	C Basic Load Rating	Co Basic Static Load Rating
	mm	in	mm	in	mm	in								
6205	25.0000	0.9843	52.0000	2.0472	41.2750	1.6250	30.50	47.00	32.166	44.854	1.02	1.02	10,200	15,700
6206	30.0000	1.1811	62.0000	2.4409	47.6250	1.8750	36.10	56.40	38.062	54.074	1.02	1.02	15,500	24,300
6207	35.0000	1.3780	72.0000	2.8346	53.9750	2.1250	41.60	65.30	43.970	62.471	1.02	1.02	19,400	30,600
6208	40.0000	1.5748	80.0000	3.1496	60.3250	2.3750	47.20	72.90	49.929	69.619	1.52	1.02	24,600	41,300
6209	45.0000	1.7717	85.0000	3.3465	60.3250	2.3750	52.80	78.20	55.519	74.988	1.52	1.02	26,700	47,500
6210	50.0000	1.9685	90.0000	3.5433	60.3250	2.3750	57.60	82.80	60.460	79.545	1.52	1.02	27,100	50,300
6211	55.0000	2.1654	100.0000	3.9370	66.6750	2.6250	64.00	87.90	66.901	88.019	2.03	1.52	32,900	61,900
6212	60.0000	2.3622	110.0000	4.3307	73.0250	2.8750	69.30	101.30	72.380	97.762	2.03	1.52	42,300	77,700
6213	65.0000	2.5591	120.0000	4.7244	76.2000	3.0000	77.00	110.00	80.421	105.804	2.54	1.52	45,900	88,700
6214	70.0000	2.7559	125.0000	4.9213	79.3750	3.1250	81.80	115.60	84.772	111.536	2.54	1.52	51,300	100,000
6215	75.0000	2.9528	130.0000	5.1181	82.5500	3.2500	85.60	120.10	89.014	115.781	2.54	1.52	55,800	113,000
6216	80.0000	3.1496	140.0000	5.5118	88.9000	3.5000	91.20	129.30	95.286	124.658	2.54	2.03	63,100	127,000
6217	85.0000	3.3465	150.0000	5.9055	98.4250	3.8750	98.00	101.80	102.006	134.216	3.18	2.03	77,600	159,000
6218	90.0000	3.5433	160.0000	6.2992	104.7750	4.1250	103.10	147.60	107.218	142.189	3.18	2.03	87,400	178,000
6219	95.0000	3.7402	170.0000	6.6929	111.1250	4.3750	109.00	157.00	113.518	151.242	3.18	2.03	100,000	206,000

Additional Notes

Please call 1-866-REXNORD for availability

Dimensions “R” & “r”, largest fillet radius that will clear bearing corners

For the Selection Guide, Load Ratings and Speed Limits, see the Link-Belt Cylindrical Roller Bearing Engineering section on pages 474 - 489.

Note: Dimensions subject to change. Certified dimensions of ordered material furnished on request.

Filament Bearings
Standard Sleeves: Rex RPT

Contents

	Page
Features and Benefits	502
Nomenclature	503
Engineering	504
Dimensions	
Straight Sleeve	506

Industries Served

Construction
Agriculture
Food
Marine
General Industrial

Rex RPT Bearings

Rex RPT bearings are self-lubricating, non-metallic straight sleeve, round bore bearings in industry standard outside diameter, inside diameter and length dimensions. Ideal for a wide range of wet and dry applications, including aerial lifts, pallet and reach trucks, boat lifts, seeders, tillers, plows, sprayers, fillers and cappers, valves and many more, our bearings offer customers a competitive economical solution for all of their toughest problems. Additionally, customers can count on Rexnord to deliver these in-stock bearings in industry-leading turnaround times of five business days to three weeks.

General Bearing Information:

- Typical dynamic loading from 500 to 12,000 psi
- Operating temperatures from -320 °F to 325 °F (-195.6 °C to 162.8 °C)
- Static and dynamic coefficient of friction from .12 to .06

Features and Benefits

Range of in-stock standard diameter, lengths and wall dimension options

Diameter sizes range from 1/2 inch to 5 inches; lengths are available from 1/4 inch to 10 inches; with wall thicknesses of 1/8 inch and 1/4 inch.

Unique Composition

The non-metallic design combination of Teflon™▼ fiber, fiberglass and resin offers a corrosion-, moisture-, seizure-, chemical- and fretting-resistant product which reduces downtime and improves productivity.

Rugged Performance

The non-metallic combination is an alternative to metallic bushings that require lubrication in low to moderate load applications. The self-lubricated design maintains peak performance throughout the product life while allowing the customer to eliminate costly lubrication systems.

Lightweight Solution

Rex RPT bearings weigh 77 percent less than steel bearings and 30 percent less than aluminum bearings. This reduced weight offers easier handling and installation and a reduced equipment weight which will lower maintenance costs and provide an extra-long product life.

Variety of Uses

The non-metallic combination allows the Rex RPT bearing to provide electrical insulation as well as reduced noise levels compared to metallic bushings. This bearing can be used on a wide variety of equipment, including underwater applications and other hard to access locations.

▼ Teflon™ is a trademark of The Chemours Company FC, LLC used under license by Toray Flurofibers (America), Inc.

Nomenclature

7GP1 - 08 12 - 028

Symbol	Description
7GP1	Rex RPT Straight Sleeve Bearing
08	Bearing Nominal ID in sixteenths of an inch (1 inch = 16)
12	Bearing Nominal OD in sixteenths of an inch (1 inch = 16)
028	Bearing Length in sixteenths of an inch (1 inch = 016)

Design and Application Guidelines

The overall performance of filament wound bearings is directly affected by operating factors such as applied loads, operating motions, duty cycle, environmental conditions, installation methods, shaft finish and hardness. While specific design criteria are not available for all applications, certain guidelines must be followed to provide the rated life.

Loads and Ratings

The filament wound back-up material in RPT journal bearings is capable of withstanding static radial load levels as high as 60,000 psi on the projected bearing area. This is in excess of the fabric liner capability of 50,000 psi based on previous experiences. The load deflection relationship of RPT journal bearings and metal-backed Teflon▼ lined bearings is very similar. The yield point and ultimate strength of the filament wound back-up material are approximately equal.

Project Bearing Area (PBA) = I.D. x Length

$$\text{Bearing Stress (PSI)} = \frac{\text{Bearing Load}}{\text{PBA}}$$

Load-life Relationship

Since accumulated wear terminates the useful life of a properly selected Teflon▼ liner bearing, the RPT selection procedure is based on the use of Bearing Area Factors (BAF), rather than load ratings, to select a bearing which meets the combined load-life requirements of the application. The Bearing Area Factor (BAF) is a numerical index of a bearing's dynamic performance ability and is based upon effective bearing area.

RPT bearings are rated on the basis of L10 life expectancy which means that 90% of a given group of bearings will exceed the predicted life. The correlation of load and life is shown in the lower half of the Selection Chart which relates the BAF to cycle of life.

Bearing Area Factor

BAF = $I.D.^{0.491}$ x (W - .090)

I.D. = Bearing Inner Diameter

W = Bearing Length

All dimensions are in inches

Motion

RPT bearings can withstand various degrees of motion, depending upon speed and load. They will operate under all degrees of motion normally encountered in applications. Note that the degree of oscillation can affect bearing performance and must be taken into account when making a bearing selection, as shown on the nomograph.

Laboratory testing of filament journal bearings has shown their capacity to operate successfully under the low speeds, (less than 90 cycles per minute), high load conditions, (up to 20,000 psi), as well as the high speeds, (up to 300 cpm), light load (less than 5,000 psi) conditions.

Temperature

The normal operating temperature range for RPT bearings is -320 °F to 325 °F. Satisfactory operation can be obtained with limited exposure to temperatures as high as 400 °F. However, at continuous temperatures above 325 °F, an increase in wear rates will be experienced. Contact a Rexnord engineer for applications at cryogenic temperature, as well as for applications.

Shaft Recommendations

Since the shaft surface significantly affects the operation of the journal bearing design, its selection in regard to material, hardness, coating and surface roughness is crucial.

High loads require smooth surfaces with hardened and heat-treated shafts. With stress levels above 8,000 psi, shafting should have a surface finish of 8 micro inch or better to achieve optimum performance. However, tests have been run on 25-30 micro inch finishes with 55 Rc shafts at 4,000 psi with acceptable results.

Shafting Materials

A number of shaft materials have been used in conjunction with RPT bearings:

1. 52100 high carbon steel
2. 4140 chrome and nickel plated steel
3. 300 and 400 series stainless steel
4. Precipitation hardened grades 17-4PH, 15-5PH, 13-8PH Moly chrome and nickel plated stainless steel
5. 2000 and 7000 series aluminum grade hard-anodized
6. Low to high carbon steels

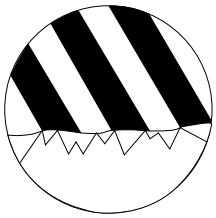

Sharp Machining Marks

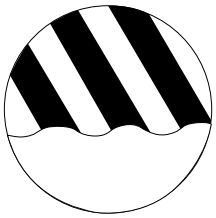

Polished Machining Marks

Surface roughness values do not define the character of the finish.
Polished shafting (right) normally produces longer bearing life.

Full Rotation

Full rotation can be accommodated if load and speed are below the curve in the following graph. See reference formula for pressure and velocity.

Formulae used in the selection of RPT bearings.

Bearing Pressure

$$\text{PSI} = \frac{\text{Load lbs.}}{\text{I.D. x W}}$$

Speed (Surface Velocity)

Full Rotation

Surface velocity (Ft/Min) = .262 x I.D. x RPM

*All dimensions are in inches

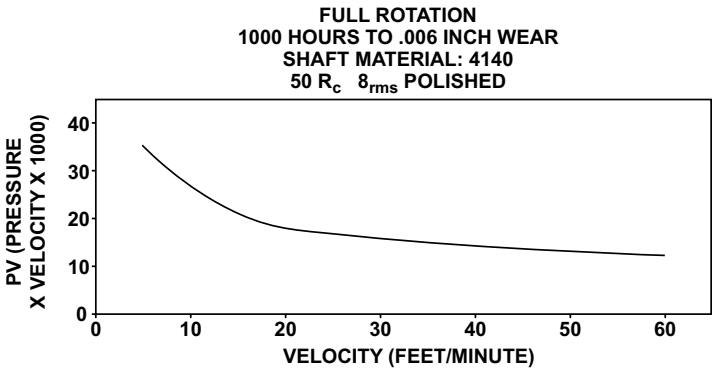

Friction

Rex RPT bearings offer low-friction operation. Friction coefficients vary from .12 to .06 depending on the load level. Increased loading results in significant decrease in coefficient of friction. Also, as the bearing "breaks in", the coefficient of friction decreases.

Rex RPT Bearing Selection

The RPT selection graph is designed to handle general applications described by the following parameters:

Speed not exceeding 60 cycles per minute (12FPM)
Pressures not exceeding 25,000 psi
Oscillations 10° and greater, up to 90° included angle

For application requirements exceeding these parameters – consult a Rexnord engineer.

RPT selection problems are typically either: (a) a life calculation where load and size are known or (b) a size selection, where load and required life are known.

Using the selection graph, and following the steps outlined can handle either situation:

Life Calculation – (known load, oscillation and bearing size)

1. Convert oscillation angle to included angle, then follow that line horizontally until it intersects load level.
2. From that point, drop vertically down the chart until the BAF value is intersected. See section Design and Application Guidelines - Load-life relationship for complete explanation of BAF.
3. From that point, follow horizontally and read resulting cycles of life (to .006 wear).

Size Selection – (known load, oscillation and required life)

1. Locate the intersection of the oscillation angle and load lines.
2. Drop vertically down the chart until the required life value is intersected.
3. Determine the required capacity BAF by following the inclined line from that point.
4. Select appropriate size bearing from the thin or heavy series with a BAF in excess of that value, incorporating any known size restrictions – and checking to assure that pin strength (bending) is adequate.

Example – Life Calculation – See graph "BLACK LINES (Dashed)" for example below

Information required to use the selection chart is as follows:

Oscillation angle	±25 degrees
Radial Load	15,000 lbs
Bearing size	1" dia, 5/8" long

1. Included angle equals the plus and minus motion although the midpoint of the cycle, ±25 degrees equals an included angle of 50 degrees (point 1)
   a. Radial load equals 15,000 lbs (point 2). These two intersect at (point 3).
2. The BAF for a 1" dia., with 5/8" (.625) width bearing is .536, as found (point 4). This line intersects that (point 3) requirement at (point 5).
3. To determine life to .006 inch wear from chart read the vertical axis value (point 6), which equals 130,000 cycles. Information required to use the selection chart is as follows:

Example – Size Selection – See graph "BLUE LINES (Bolded)" for example below

Information to use chart is as follows:

Oscillation angle	±30 degrees
Radial Load	20,000 lbs
Required life	500,000 cycles
Size restriction	Cannot exceed 1-1/4" dia pin

1. Included angle equals the plus and minus motion through the midpoint of the cycle, thus ±30 degrees equals an included angle of 60 degrees (point 7), the radial load is 20,000 pounds (point 8), and the intersection of angle and load is (point 9).
2. Move down the chart vertically until the 500,000 cycle life (point 10) line is intersected - (point 11).
3. Follow the inclined line and read the required BAF value (point 12) or 1.5.
4. With a required BAF of 1.5, any bearing from the Product Data Sheets that exceeds the value could be selected
   ie. with a 1-1/4" dia. pin, a 1-1/2" length is required, thus a 7GP1-2024-024. However, if a 1" dia. pin will accept the load, a longer 1-3/4" length is required (7GP1-1620-028). Checking of pin bending strength is appropriate.

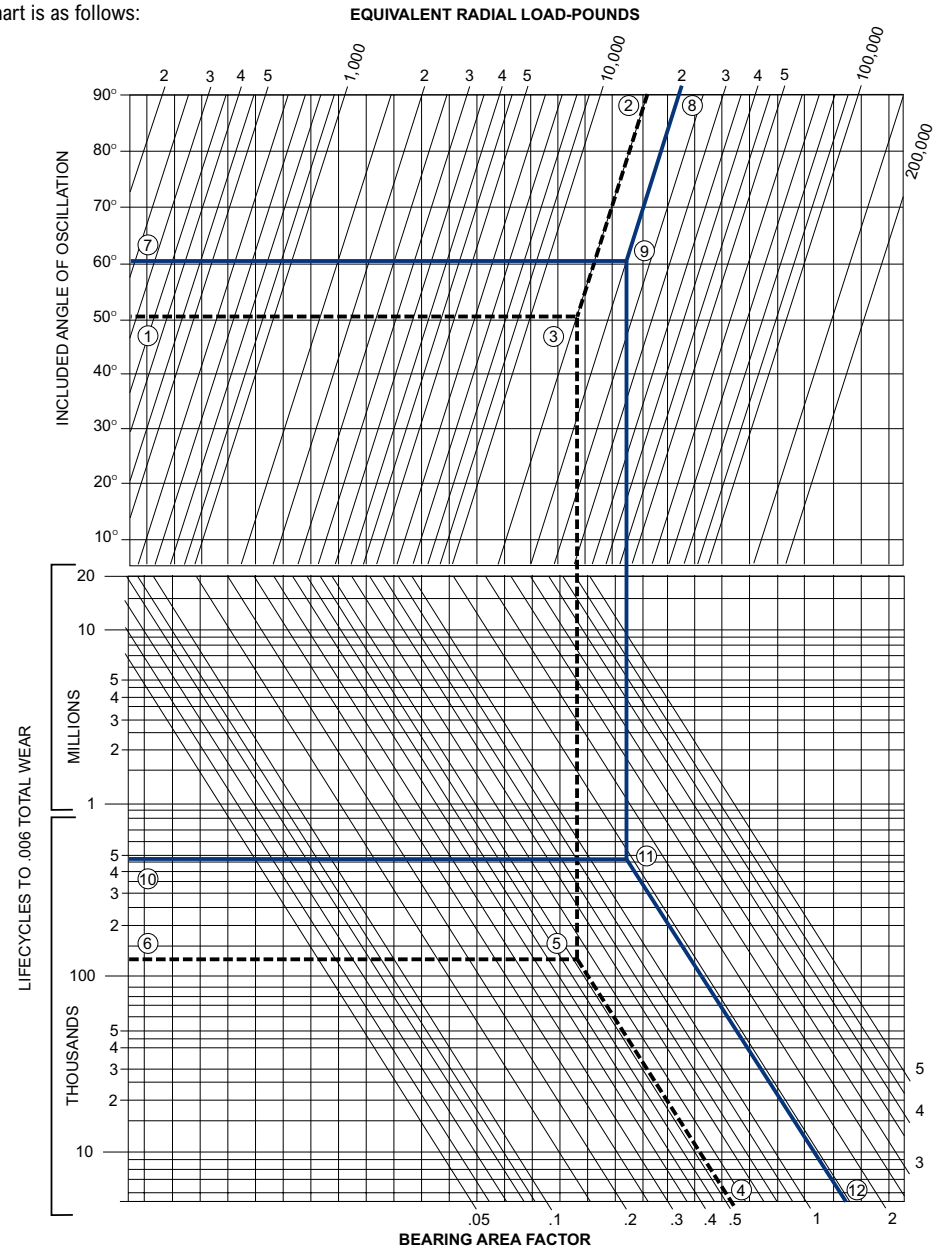

1/8 Inch Wall Straight Sleeve Bearing

Product Features

Corrosion Resistant
Self-Lubricating
Wide Range of Bore sizes and lengths
Lightweight Teflon▼ and Polyester Construction
Operating Temps: -320 °F to 325 °F
Underwater Operation Capability

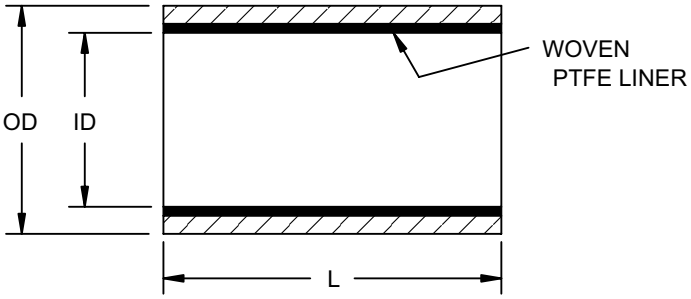

Bearing Dimensions

Bore Size	Part Number	ID	OD	Recommended Sizes: Housing Bore	Recommended Sizes: Max Shaft Dia	Recommended Sizes: Wt (Ref) Lb/In.	Model Number Suffix L= Length Suffix in Multiples of 1/16" (Tolerance +/-.010): 0.250	0.500	0.750	1.000	1.250	1.500	1.0750	2.000	2.250	2.500	2.750	3.000	Maximum Length
1/2	7GP1-0812-XXX	0.506 0.507	0.7535 0.7525	0.7500 0.7505	0.5000	0.0173	-004	-008	-012	-016	**-020**	**-024**	**-028**	**-032**	**-036**	**-040**	**-044**	**-048**	6.000
5/8	7GP1-1014-XXX	0.631 0.632	0.8785 0.8775	0.8750 0.8755	0.6250	0.0207	-004	-008	-012	-016	**-020**	**-024**	**-028**	**-032**	**-036**	**-040**	**-044**	**-048**	10.000
3/4	7GP1-1216-XXX	0.756 0.757	1.0035 1.0025	1.0000 1.0005	0.7500	0.0242	**-004**	-008	-012	-016	-020	-024	**-028**	**-032**	**-036**	**-040**	**-044**	**-048**	10.000
7/8	7GP1-1418-XXX	0.881 0.882	1.1285 1.1275	1.1250 1.1255	0.8750	0.0276	**-004**	-008	-012	-016	-020	-024	-028	**-032**	**-036**	**-040**	**-044**	**-048**	10.000
1	7GP1-1620-XXX	1.006 1.007	1.2535 1.2525	1.2500 1.2505	1.0000	0.0311	**-004**	-008	-012	-016	-020	-024	-028	-032	**-036**	**-040**	**-044**	**-048**	10.000
1 1/8	7GP1-1822-XXX	1.131 1.132	1.3785 1.3775	1.3750 1.3755	1.1250	0.0345	**-004**	**-008**	-012	-016	-020	-024	-028	-032	-036	-040	**-044**	**-048**	10.000
1 1/4	7GP1-2024-XXX	1.256 1.257	1.5035 1.5025	1.5000 1.5005	1.2500	0.0379	**-004**	**-008**	-012	-016	-020	-024	-028	-032	-036	-040	**-044**	**-048**	10.000
1 3/8	7GP1-2226-XXX	1.381 1.382	1.6285 1.6275	1.6250 1.6255	1.3750	0.0414	**-004**	**-008**	-012	-016	-020	-024	-028	-032	-036	-040	-044	**-048**	10.000
1 1/2	7GP1-2428-XXX	1.506 1.507	1.7535 1.7525	1.7500 1.7505	1.5000	0.0448	**-004**	**-008**	-012	-016	-020	-024	-028	-032	-036	-040	-044	-048	10.000
1 5/8	7GP1-2630-XXX	1.631 1.632	1.8785 1.8775	1.8750 1.8755	1.6250	0.0482	**-004**	**-008**	**-012**	-016	-020	-024	-028	-032	-036	-040	-044	-048	10.000
1 3/4	7GP1-2832-XXX	1.757 1.758	2.0035 2.0025	2.0000 2.0005	1.7500	0.0515	**-004**	**-008**	**-012**	-016	-020	-024	-028	-032	-036	-040	-044	-048	10.000
1 7/8	7GP1-3034-XXX	1.882 1.883	2.1285 2.1275	2.1250 2.1255	1.8750	0.0549	**-004**	**-008**	**-012**	-016	-020	-024	-028	-032	-036	-040	-044	-048	10.000
2	7GP1-3236-XXX	2.0085 2.0095	2.2545 2.2535	2.2500 2.2510	2.0000	0.0582	**-004**	**-008**	**-012**	-016	-020	-024	-028	-032	-036	-040	-044	-048	10.000
2 1/8	7GP1-3438-XXX	2.1335 2.1345	2.3795 2.3785	2.3750 2.3760	2.1250	0.0614	**-004**	**-008**	**-012**	**-016**	-020	-024	028	-032	-036	-040	-044	-048	10.000
2 1/4	7GP1-3640-XXX	2.2585 2.2595	2.5045 2.5035	2.5000 2.5010	2.2500	0.0648	**-004**	**-008**	**-012**	**-016**	-020	-024	-028	-032	-036	-040	-044	-048	10.000
2 3/8	7GP1-3842-XXX	2.3835 2.3845	2.6295 2.6285	2.6250 2.6260	2.3750	0.0682	**-004**	**-008**	**-012**	**-016**	-020	-024	-028	-032	-036	-040	-044	-048	10.000
2 1/2	7GP1-4044-XXX	2.509 2.510	2.7545 2.7535	2.7500 2.7510	2.5000	0.0714	**-004**	**-008**	**-012**	**-016**	-020	-024	-028	-032	-036	-040	-044	-048	10.000
2 3/4	7GP1-4448-XXX	2.759 2.760	3.005 3.004	3.0000 3.0015	2.7500	0.0784	**-004**	**-008**	**-012**	**-016**	**-020**	-024	-028	-032	-036	-040	-044	-048	10.000
3	7GP1-4852-XXX	3.0080 3.0105	3.255 3.254	3.2500 3.2515	3.0000	0.0854		**-008**	**-012**	**-016**	**-020**	-024	-028	-032	-036	-040	-044	-048	10.000
3 1/4	7GP1-5256-XXX	3.2580 3.2605	3.5055 3.5045	3.5000 3.5020	3.2500	0.0925		**-008**	**-012**	**-016**	**-020**	**-024**	-028	-032	-036	-040	-044	-048	10.000
3 1/2	7GP1-5660-XXX	3.5080 3.5105	3.7555 3.7545	3.7500 3.7520	3.5000	0.0994		**-008**	**-012**	**-016**	**-020**	**-024**	-028	-032	-036	-040	-044	-048	10.000
3 3/4	7GP1-6064-XXX	3.7580 3.7605	4.0055 4.0045	4.0000 4.0020	3.7500	0.1062		**-008**	**-012**	**-016**	**-020**	**-024**	**-028**	-032	-036	-040	-044	-048	10.000
4	7GP1-6468-XXX	4.011 4.014	4.257 4.256	4.2500 4.2520	4.0000	0.1124		**-008**	**-012**	**-016**	**-020**	**-024**	**-028**	-032	-036	-040	-044	-048	10.000
4 1/4	7GP1-6872-XXX	4.261 4.264	4.507 4.506	4.5000 4.5020	4.2500	0.1186		**-008**	**-012**	**-016**	**-020**	**-024**	**-028**	**-032**	-036	-040	-044	-048	10.000
4 1/2	7GP1-7276-XXX	4.511 4.514	4.757 4.756	4.7500 4.7520	4.5000	0.1253		**-008**	**-012**	**-016**	**-020**	**-024**	**-028**	**-032**	-036	-040	-044	-048	10.000
4 3/4	7GP1-7680-XXX	4.761 4.764	5.007 5.006	5.0000 5.0020	4.7500	0.1321		**-008**	**-012**	**-016**	**-020**	**-024**	**-028**	**-032**	**-036**	-040	-044	-048	10.000
5	7GP1-8084-XXX	5.0105 5.0140	5.257 5.256	5.2500 5.2520	5.0000	0.1391		**-008**	**-012**	**-016**	**-020**	**-024**	**-028**	**-032**	**-036**	-040	-044	-048	10.000

Standard MODEL SIZES are noted in BLACK. For MODEL SIZES in **(BOLD)** and shaded (Gray) consult with Rexnord Rex RPT Engineering.

Continued...

1/8 Inch Wall Straight Sleeve Bearing (Continued)

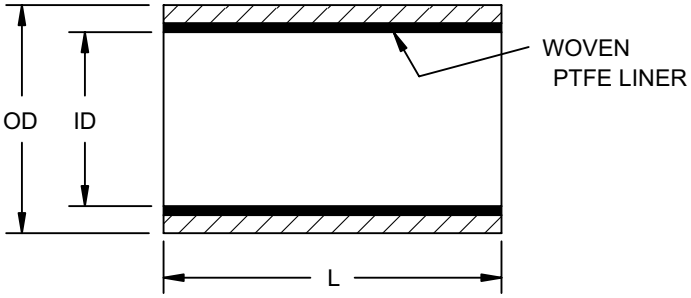

Continued...

Bearing Dimensions

Bore Size	Part Number	ID	OD	Recommended Sizes: Housing Bore	Max Shaft Dia	Wt (Ref) Lb/In.	Model Number Suffix L= Length Suffix in Multiples of 1/16" (Tolerance +/-.010): 3.250	3.500	3.750	4.000	4.250	4.500	4.750	5.000	5.250	5.500	5.750	6.000	Maximum Length
1/2	7GP1-0812-XXX	0.506	0.7535	0.7500	0.5000	0.0173	**-052**	**-056**	**-060**	**-064**	**-068**	**-072**	**-076**	**-080**	**-084**	**-088**	**-092**	**-096**	6.000
		0.507	0.7525	0.7505															
5/8	7GP1-1014-XXX	0.631	0.8785	0.8750	0.6250	0.0207	**-052**	**-056**	**-060**	**-064**	**-068**	**-072**	**-076**	**-080**	**-084**	**-088**	**-092**	**-096**	10.000
		0.632	0.8775	0.8755															
3/4	7GP1-1216-XXX	0.756	1.0035	1.0000	0.7500	0.0242	**-052**	**-056**	**-060**	**-064**	**-068**	**-072**	**-076**	**-080**	**-084**	**-088**	**-092**	**-096**	10.000
		0.757	1.0025	1.0005															
7/8	7GP1-1418-XXX	0.881	1.1285	1.1250	0.8750	0.0276	**-052**	**-056**	**-060**	**-064**	**-068**	**-072**	**-076**	**-080**	**-084**	**-088**	**-092**	**-096**	10.000
		0.882	1.1275	1.1255															
1	7GP1-1620-XXX	1.006	1.2535	1.2500	1.0000	0.0311	**-052**	**-056**	**-060**	**-064**	**-068**	**-072**	**-076**	**-080**	**-084**	**-088**	**-092**	**-096**	10.000
		1.007	1.2525	1.2505															
1 1/8	7GP1-1822-XXX	1.131	1.3785	1.3750	1.1250	0.0345	**-052**	**-056**	**-060**	**-064**	**-068**	**-072**	**-076**	**-080**	**-084**	**-088**	**-092**	**-096**	10.000
		1.132	1.3775	1.3755															
1 1/4	7GP1-2024-XXX	1.256	1.5035	1.5000	1.2500	0.0379	**-052**	**-056**	**-060**	**-064**	**-068**	**-072**	**-076**	**-080**	**-084**	**-088**	**-092**	**-096**	10.000
		1.257	1.5025	1.5005															
1 3/8	7GP1-2226-XXX	1.381	1.6285	1.6250	1.3750	0.0414	**-052**	**-056**	**-060**	**-064**	**-068**	**-072**	**-076**	**-080**	**-084**	**-088**	**-092**	**-096**	10.000
		1.382	1.6275	1.6255															
1 1/2	7GP1-2428-XXX	1.506	1.7535	1.7500	1.5000	0.0448	**-052**	**-056**	**-060**	**-064**	**-068**	**-072**	**-076**	**-080**	**-084**	**-088**	**-092**	**-096**	10.000
		1.507	1.7525	1.7505															
1 5/8	7GP1-2630-XXX	1.631	1.8785	1.8750	1.6250	0.0482	-052	**-056**	**-060**	**-064**	**-068**	**-072**	**-076**	**-080**	**-084**	**-088**	**-092**	**-096**	10.000
		1.632	1.8775	1.8755															
1 3/4	7GP1-2832-XXX	1.757	2.0035	2.0000	1.7500	0.0515	-052	-056	**-060**	**-064**	**-068**	**-072**	**-076**	**-080**	**-084**	**-088**	**-092**	**-096**	10.000
		1.758	2.0025	2.0005															
1 7/8	7GP1-3034-XXX	1.882	2.1285	2.1250	1.8750	0.0549	-052	-056	-060	**-064**	**-068**	**-072**	**-076**	**-080**	**-084**	**-088**	**-092**	**-096**	10.000
		1.883	2.1275	2.1255															
2	7GP1-3236-XXX	2.0085	2.2545	2.2500	2.0000	0.0582	-052	-056	-060	-064	**-068**	**-072**	**-076**	**-080**	**-084**	**-088**	**-092**	**-096**	10.000
		2.0095	2.2535	2.2510															
2 1/8	7GP1-3438-XXX	2.1335	2.3795	2.3750	2.1250	0.0614	-052	-056	-060	-064	-068	**-072**	**-076**	**-080**	**-084**	**-088**	**-092**	**-096**	10.000
		2.1345	2.3785	2.3760															
2 1/4	7GP1-3640-XXX	2.2585	2.5045	2.5000	2.2500	0.0648	-052	-056	-060	-064	-068	-072	**-076**	**-080**	**-084**	**-088**	**-092**	**-096**	10.000
		2.2595	2.5035	2.5010															
2 3/8	7GP1-3842-XXX	2.3835	2.6295	2.6250	2.3750	0.0682	-052	-056	-060	-064	-068	-072	-076	**-080**	**-084**	**-088**	**-092**	**-096**	10.000
		2.3845	2.6285	2.6260															
2 1/2	7GP1-4044-XXX	2.509	2.7545	2.7500	2.5000	0.0714	-052	-056	-060	-064	-068	-072	-076	-080	**-084**	**-088**	**-092**	**-096**	10.000
		2.510	2.7535	2.7510															
2 3/4	7GP1-4448-XXX	2.759	3.005	3.0000	2.7500	0.0784	-052	-056	-060	-064	-068	-072	-076	-080	-084	-088	**-092**	**-096**	10.000
		2.760	3.004	3.0015															
3	7GP1-4852-XXX	3.0080	3.255	3.2500	3.0000	0.0854	-052	-056	-060	-064	-068	-072	-076	-080	-084	-088	-092	-096	10.000
		3.0105	3.254	3.2515															
3 1/4	7GP1-5256-XXX	3.2580	3.5055	3.5000	3.2500	0.0925	-052	-056	-060	-064	-068	-072	-076	-080	-084	-088	-092	-096	10.000
		3.2605	3.5045	3.5020															
3 1/2	7GP1-5660-XXX	3.5080	3.7555	3.7500	3.5000	0.0994	-052	-056	-060	-064	-068	-072	-076	-080	-084	-088	-092	-096	10.000
		3.5105	3.7545	3.7520															
3 3/4	7GP1-6064-XXX	3.7580	4.0055	4.0000	3.7500	0.1062	-052	-056	-060	-064	-068	-072	-076	-080	-084	-088	-092	-096	10.000
		3.7605	4.0045	4.0020															
4	7GP1-6468-XXX	4.011	4.257	4.2500	4.0000	0.1124	-052	-056	-060	-064	-068	-072	-076	-080	-084	-088	-092	-096	10.000
		4.014	4.256	4.2520															
4 1/4	7GP1-6872-XXX	4.261	4.507	4.5000	4.2500	0.1186	-052	-056	-060	-064	-068	-072	-076	-080	-084	-088	-092	-096	10.000
		4.264	4.506	4.5020															
4 1/2	7GP1-7276-XXX	4.511	4.757	4.7500	4.5000	0.1253	-052	-056	-060	-064	-068	-072	-076	-080	-084	-088	-092	-096	10.000
		4.514	4.756	4.7520															
4 3/4	7GP1-7680-XXX	4.761	5.007	5.0000	4.7500	0.1321	-052	-056	-060	-064	-068	-072	-076	-080	-084	-088	-092	-096	10.000
		4.764	5.006	5.0020															
5	7GP1-8084-XXX	5.0105	5.257	5.2500	5.0000	0.1391	-052	-056	-060	-064	-068	-072	-076	-080	-084	-088	-092	-096	10.000
		5.0140	5.256	5.2520															

Standard MODEL SIZES are noted in BLACK. For MODEL SIZES in **(BOLD)** and shaded (Gray) consult with Rexnord Rex RPT Engineering.

Continued...

1/8 Inch Wall Straight Sleeve Bearing (Continued)

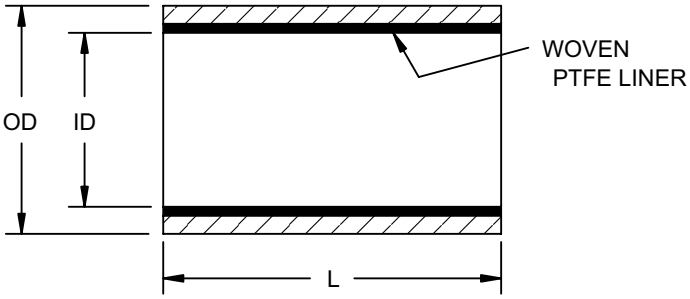

Continued...

Bearing Dimensions

Bore Size	Part Number	ID	OD	Recommended Sizes: Housing Bore	Max Shaft Dia	Wt (Ref) Lb/In.	Model Number Suffix L= Length Suffix in Multiples of 1/16" (Tolerance +/-.010): 6.500	7.000	7.500	8.000	8.500	9.000	9.500	10.000 +/-.025	Maximum Length
1/2	7GP1-0812-XXX	0.506	0.7535	0.7500	0.5000	0.0173									6.000
		0.507	0.7525	0.7505											
5/8	7GP1-1014-XXX	0.631	0.8785	0.8750	0.6250	0.0207	**-104**	**-112**	**-120**	**-128**	**-136**	**-144**	**-152**	**-160**	10.000
		0.632	0.8775	0.8755											
3/4	7GP1-1216-XXX	0.756	1.0035	1.0000	0.7500	0.0242	**-104**	**-112**	**-120**	**-128**	**-136**	**-144**	**-152**	**-160**	10.000
		0.757	1.0025	1.0005											
7/8	7GP1-1418-XXX	0.881	1.1285	1.1250	0.8750	0.0276	**-104**	**-112**	**-120**	**-128**	**-136**	**-144**	**-152**	**-160**	10.000
		0.882	1.1275	1.1255											
1	7GP1-1620-XXX	1.006	1.2535	1.2500	1.0000	0.0311	**-104**	**-112**	**-120**	**-128**	**-136**	**-144**	**-152**	**-160**	10.000
		1.007	1.2525	1.2505											
1 1/8	7GP1-1822-XXX	1.131	1.3785	1.3750	1.1250	0.0345	**-104**	**-112**	**-120**	**-128**	**-136**	**-144**	**-152**	**-160**	10.000
		1.132	1.3775	1.3755											
1 1/4	7GP1-2024-XXX	1.256	1.5035	1.5000	1.2500	0.0379	**-104**	**-112**	**-120**	**-128**	**-136**	**-144**	**-152**	**-160**	10.000
		1.257	1.5025	1.5005											
1 3/8	7GP1-2226-XXX	1.381	1.6285	1.6250	1.3750	0.0414	**-104**	**-112**	**-120**	**-128**	**-136**	**-144**	**-152**	**-160**	10.000
		1.382	1.6275	1.6255											
1 1/2	7GP1-2428-XXX	1.506	1.7535	1.7500	1.5000	0.0448	**-104**	**-112**	**-120**	**-128**	**-136**	**-144**	**-152**	**-160**	10.000
		1.507	1.7525	1.7505											
1 5/8	7GP1-2630-XXX	1.631	1.8785	1.8750	1.6250	0.0482	**-104**	**-112**	**-120**	**-128**	**-136**	**-144**	**-152**	**-160**	10.000
		1.632	1.8775	1.8755											
1 3/4	7GP1-2832-XXX	1.757	2.0035	2.0000	1.7500	0.0515	**-104**	**-112**	**-120**	**-128**	**-136**	**-144**	**-152**	**-160**	10.000
		1.758	2.0025	2.0005											
1 7/8	7GP1-3034-XXX	1.882	2.1285	2.1250	1.8750	0.0549	**-104**	**-112**	**-120**	**-128**	**-136**	**-144**	**-152**	**-160**	10.000
		1.883	2.1275	2.1255											
2	7GP1-3236-XXX	2.0085	2.2545	2.2500	2.0000	0.0582	**-104**	**-112**	**-120**	**-128**	**-136**	**-144**	**-152**	**-160**	10.000
		2.0095	2.2535	2.2510											
2 1/8	7GP1-3438-XXX	2.1335	2.3795	2.3750	2.1250	0.0614	**-104**	**-112**	**-120**	**-128**	**-136**	**-144**	**-152**	**-160**	10.000
		2.1345	2.3785	2.3760											
2 1/4	7GP1-3640-XXX	2.2585	2.5045	2.5000	2.2500	0.0648	**-104**	**-112**	**-120**	**-128**	**-136**	**-144**	**-152**	**-160**	10.000
		2.2595	2.5035	2.5010											
2 3/8	7GP1-3842-XXX	2.3835	2.6295	2.6250	2.3750	0.0682	**-104**	**-112**	**-120**	**-128**	**-136**	**-144**	**-152**	**-160**	10.000
		2.3845	2.6285	2.6260											
2 1/2	7GP1-4044-XXX	2.509	2.7545	2.7500	2.5000	0.0714	**-104**	**-112**	**-120**	**-128**	**-136**	**-144**	**-152**	**-160**	10.000
		2.510	2.7535	2.7510											
2 3/4	7GP1-4448-XXX	2.759	3.005	3.0000	2.7500	0.0784	**-104**	**-112**	**-120**	**-128**	**-136**	**-144**	**-152**	**-160**	10.000
		2.760	3.004	3.0015											
3	7GP1-4852-XXX	3.0080	3.255	3.2500	3.0000	0.0854	**-104**	**-112**	**-120**	**-128**	**-136**	**-144**	**-152**	**-160**	10.000
		3.0105	3.254	3.2515											
3 1/4	7GP1-5256-XXX	3.2580	3.5055	3.5000	3.2500	0.0925	-104	**-112**	**-120**	**-128**	**-136**	**-144**	**-152**	**-160**	10.000
		3.2605	3.5045	3.5020											
3 1/2	7GP1-5660-XXX	3.5080	3.7555	3.7500	3.5000	0.0994	-104	-112	**-120**	**-128**	**-136**	**-144**	**-152**	**-160**	10.000
		3.5105	3.7545	3.7520											
3 3/4	7GP1-6064-XXX	3.7580	4.0055	4.0000	3.7500	0.1062	-104	-112	-120	**-128**	**-136**	**-144**	**-152**	**-160**	10.000
		3.7605	4.0045	4.0020											
4	7GP1-6468-XXX	4.011	4.257	4.2500	4.0000	0.1124	-104	-112	-120	-128	**-136**	**-144**	**-152**	**-160**	10.000
		4.014	4.256	4.2520											
4 1/4	7GP1-6872-XXX	4.261	4.507	4.5000	4.2500	0.1186	-104	-112	-120	-128	-136	**-144**	**-152**	**-160**	10.000
		4.264	4.506	4.5020											
4 1/2	7GP1-7276-XXX	4.511	4.757	4.7500	4.5000	0.1253	-104	-112	-120	-128	-136	-144	**-152**	**-160**	10.000
		4.514	4.756	4.7520											
4 3/4	7GP1-7680-XXX	4.761	5.007	5.0000	4.7500	0.1321	-104	-112	-120	-128	-136	-144	-152	**-160**	10.000
		4.764	5.006	5.0020											
5	7GP1-8084-XXX	5.0105	5.257	5.2500	5.0000	0.1391	-104	-112	-120	-128	-136	-144	-152	-160	10.000
		5.0140	5.256	5.2520											

Standard MODEL SIZES are noted in BLACK. For MODEL SIZES in **(BOLD)** and shaded (Gray) consult with Rexnord Rex RPT Engineering.

1/4 Inch Wall Straight Sleeve Bearing

Product Features

Corrosion Resistant
Self-Lubricating
Wide Range of Bore sizes and lengths
Lightweight Teflon▼ and Polyester Construction
Operating Temps: -320 °F to 325 °F
Underwater Operation Capability

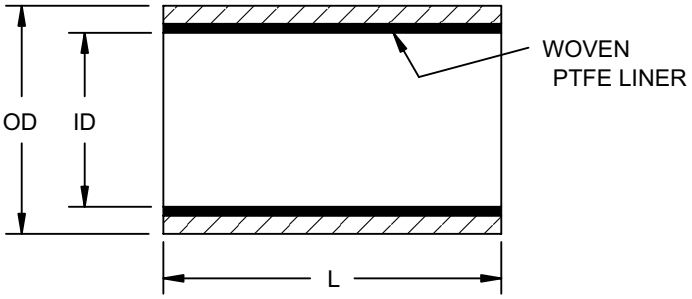

Bearing Dimensions

Bore Size	Part Number	ID	OD	Recommended Sizes: Housing Bore	Max Shaft Dia	Wt (Ref) Lb/In.	Model Number Suffix L= Length Suffix in Multiples of 1/16" (Tolerance +/-.010)												Maximum Length
							0.250	0.500	0.750	1.000	1.250	1.500	1.0750	2.000	2.250	2.500	2.750	3.000	
1/2	7GP1-0816-XXX	0.506	1.0035	1.0000	0.5000	0.0417	-004	-008	-012	-016	**-020**	**-024**	**-028**	**-032**	**-036**	**-040**	**-044**	**-048**	6.000
		0.507	1.0025	1.0005															
5/8	7GP1-1018-XXX	0.631	1.1285	1.1250	0.6250	0.0486	-004	-008	-012	-016	**-020**	**-024**	**-028**	**-032**	**-036**	**-040**	**-044**	**-048**	10.000
		0.632	1.1275	1.1255															
3/4	7GP1-1220-XXX	0.756	1.2535	1.2500	0.7500	0.0555	**-004**	-008	-012	-016	-020	-024	**-028**	**-032**	**-036**	**-040**	**-044**	**-048**	10.000
		0.757	1.2525	1.2505															
7/8	7GP1-1422-XXX	0.881	1.3785	1.3750	0.8750	0.0624	**-004**	-008	-012	-016	-020	-024	-028	**-032**	**-036**	**-040**	**-044**	**-048**	10.000
		0.882	1.3775	1.3755															
1	7GP1-1624-XXX	1.006	1.5035	1.5000	1.0000	0.0693	**-004**	-008	-012	-016	-020	-024	-028	-032	**-036**	**-040**	**-044**	**-048**	10.000
		1.007	1.5025	1.5005															
1 1/8	7GP1-1826-XXX	1.131	1.6285	1.6250	1.1250	0.0762	**-004**	**-008**	-012	-016	-020	-024	-028	-032	-036	-040	**-044**	**-048**	10.000
		1.132	1.6275	1.6255															
1 1/4	7GP1-2028-XXX	1.256	1.7535	1.7500	1.2500	0.0831	**-004**	**-008**	-012	-016	-020	-024	-028	-032	-036	-040	**-044**	**-048**	10.000
		1.257	1.7525	1.7505															
1 3/8	7GP1-2230-XXX	1.381	1.8785	1.8750	1.3750	0.0900	**-004**	**-008**	-012	-016	-020	-024	-028	-032	-036	-040	-044	**-048**	10.000
		1.382	1.8775	1.8755															
1 1/2	7GP1-2432-XXX	1.506	2.0035	2.0000	1.5000	0.0970	**-004**	**-008**	-012	-016	-020	-024	-028	-032	-036	-040	-044	-048	10.000
		1.507	2.0025	2.0005															
1 5/8	7GP1-2634-XXX	1.631	2.1285	2.1250	1.6250	0.1039	**-004**	**-008**	**-012**	-016	-020	-024	-028	-032	-036	-040	-044	-048	10.000
		1.632	1.1275	2.1255															
1 3/4	7GP1-2836-XXX	1.757	2.2545	2.2500	1.7500	0.1108	**-004**	**-008**	**-012**	-016	-020	-024	-028	-032	-036	-040	-044	-048	10.000
		1.758	2.2535	2.2510															
1 7/8	7GP1-3038-XXX	1.882	2.3795	2.3750	1.8750	0.1177	**-004**	**-008**	**-012**	-016	-020	-024	-028	-032	-036	-040	-044	-048	10.000
		1.883	2.3785	2.3760															
2	7GP1-3240-XXX	2.0085	2.5045	2.5000	2.0000	0.1243	**-004**	**-008**	**-012**	-016	-020	-024	-028	-032	-036	-040	-044	-048	10.000
		2.0095	2.5035	2.5010															
2 1/8	7GP1-3442-XXX	2.1335	2.6295	2.6250	2.1250	0.1306	**-004**	**-008**	**-012**	**-016**	-020	-024	028	-032	-036	-040	-044	-048	10.000
		2.1345	2.6285	2.6260															
2 1/4	7GP1-3644-XXX	2.2585	2.7545	2.7500	2.2500	0.1374	**-004**	**-008**	**-012**	**-016**	-020	-024	-028	-032	-036	-040	-044	-048	10.000
		2.2595	2.7535	2.7510															
2 3/8	7GP1-3846-XXX	2.3835	2.8795	2.8750	2.3750	0.1442	**-004**	**-008**	**-012**	**-016**	-020	-024	-028	-032	-036	-040	-044	-048	10.000
		2.3845	2.8785	2.8760															
2 1/2	7GP1-4048-XXX	2.509	3.005	3.0000	2.5000	0.1511	**-004**	**-008**	**-012**	**-016**	-020	-024	-028	-032	-036	-040	-044	-048	10.000
		2.510	3.004	3.0015															
2 3/4	7GP1-4452-XXX	2.759	3.255	3.2500	2.7500	0.1648	**-004**	**-008**	**-012**	**-016**	**-020**	-024	-028	-032	-036	-040	-044	-048	10.000
		2.760	3.254	3.2515															
3	7GP1-4856-XXX	3.0080	3.5055	3.5000	3.0000	0.1790		**-008**	**-012**	**-016**	**-020**	-024	-028	-032	-036	-040	-044	-048	10.000
		3.0105	3.5045	3.5020															
3 1/4	7GP1-5260-XXX	3.2580	3.3755	3.7500	3.2500	0.1928		**-008**	**-012**	**-016**	**-020**	**-024**	-028	-032	-036	-040	-044	-048	10.000
		3.2605	3.3745	3.7520															
3 1/2	7GP1-5664-XXX	3.5080	4.0055	4.0000	3.5000	0.2066		**-008**	**-012**	**-016**	**-020**	**-024**	-028	-032	-036	-040	-044	-048	10.000
		3.5105	4.0045	4.0020															
3 3/4	7GP1-6068-XXX	3.7580	4.2555	4.2500	3.7500	0.2203		**-008**	**-012**	**-016**	**-020**	**-024**	**-028**	-032	-036	-040	-044	-048	10.000
		3.7605	4.2545	4.2520															
4	7GP1-6472-XXX	4.011	4.507	4.5000	4.0000	0.2334		**-008**	**-012**	**-016**	**-020**	**-024**	**-028**	-032	-036	-040	-044	-048	10.000
		4.014	4.506	4.5020															
4 1/4	7GP1-6876-XXX	4.261	4.757	4.7500	4.2500	0.2459		**-008**	**-012**	**-016**	**-020**	**-024**	**-028**	**-032**	-036	-040	-044	-048	10.000
		4.264	4.756	4.7520															
4 1/2	7GP1-7280-XXX	4.511	5.007	5.0000	4.5000	0.2596		**-008**	**-012**	**-016**	**-020**	**-024**	**-028**	**-032**	-036	-040	-044	-048	10.000
		4.514	5.006	5.0020															
4 3/4	7GP1-7684-XXX	4.761	5.257	5.2500	4.7500	0.2732		**-008**	**-012**	**-016**	**-020**	**-024**	**-028**	**-032**	**-036**	-040	-044	-048	10.000
		4.764	5.256	5.2520															
5	7GP1-8088-XXX	5.0105	5.507	5.5000	5.0000	0.2871		**-008**	**-012**	**-016**	**-020**	**-024**	**-028**	**-032**	**-036**	-040	-044	-048	10.000
		5.0140	5.506	5.5020															

Standard MODEL SIZES are noted in BLACK. For MODEL SIZES in **(BOLD)** and shaded (Gray) consult with Rexnord Rex RPT Engineering.

Continued...

1/4 Inch Wall Straight Sleeve Bearing (Continued)

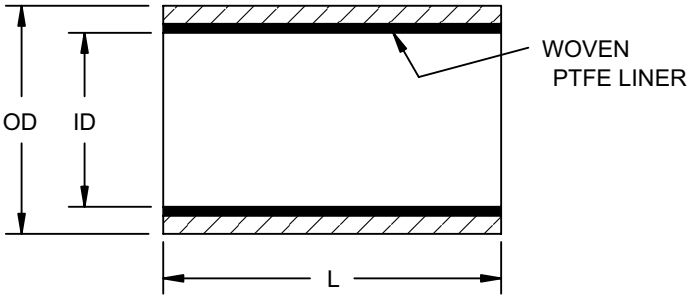

Continued..

Bearing Dimensions

Bore Size	Part Number	ID	OD	Recommended Sizes: Housing Bore	Max Shaft Dia	Wt (Ref) Lb/In.	Model Number Suffix L= Length Suffix in Multiples of 1/16" (Tolerance +/-.010) 3.250	3.500	3.750	4.000	4.250	4.500	4.750	5.000	5.250	5.500	5.750	6.000	Maximum Length
1/2	7GP1-0816-XXX	0.506	1.0035	1.0000	0.5000	0.0417	**-052**	**-056**	**-060**	**-064**	**-068**	**-072**	**-076**	**-080**	**-084**	**-088**	**-092**	**-096**	6.000
		0.507	1.0025	1.0005															
5/8	7GP1-1018-XXX	0.631	1.1285	1.1250	0.6250	0.0486	**-052**	**-056**	**-060**	**-064**	**-068**	**-072**	**-076**	**-080**	**-084**	**-088**	**-092**	**-096**	10.000
		0.632	1.1275	1.1255															
3/4	7GP1-1220-XXX	0.756	1.2535	1.2500	0.7500	0.0555	**-052**	**-056**	**-060**	**-064**	**-068**	**-072**	**-076**	**-080**	**-084**	**-088**	**-092**	**-096**	10.000
		0.757	1.2525	1.2505															
7/8	7GP1-1422-XXX	0.881	1.3785	1.3750	0.8750	0.0624	**-052**	**-056**	**-060**	**-064**	**-068**	**-072**	**-076**	**-080**	**-084**	**-088**	**-092**	**-096**	10.000
		0.882	1.3775	1.3755															
1	7GP1-1624-XXX	1.006	1.5035	1.5000	1.0000	0.0693	**-052**	**-056**	**-060**	**-064**	**-068**	**-072**	**-076**	**-080**	**-084**	**-088**	**-092**	**-096**	10.000
		1.007	1.5025	1.5005															
1 1/8	7GP1-1826-XXX	1.131	1.6285	1.6250	1.1250	0.0762	**-052**	**-056**	**-060**	**-064**	**-068**	**-072**	**-076**	**-080**	**-084**	**-088**	**-092**	**-096**	10.000
		1.132	1.6275	1.6255															
1 1/4	7GP1-2028-XXX	1.256	1.7535	1.7500	1.2500	0.0831	**-052**	**-056**	**-060**	**-064**	**-068**	**-072**	**-076**	**-080**	**-084**	**-088**	**-092**	**-096**	10.000
		1.257	1.7525	1.7505															
1 3/8	7GP1-2230-XXX	1.381	1.8785	1.8750	1.3750	0.0900	**-052**	**-056**	**-060**	**-064**	**-068**	**-072**	**-076**	**-080**	**-084**	**-088**	**-092**	**-096**	10.000
		1.382	1.8775	1.8755															
1 1/2	7GP1-2432-XXX	1.506	2.0035	2.0000	1.5000	0.0970	**-052**	**-056**	**-060**	**-064**	**-068**	**-072**	**-076**	**-080**	**-084**	**-088**	**-092**	**-096**	10.000
		1.507	2.0025	2.0005															
1 5/8	7GP1-2634-XXX	1.631	2.1285	2.1250	1.6250	0.1039	-052	**-056**	**-060**	**-064**	**-068**	**-072**	**-076**	**-080**	**-084**	**-088**	**-092**	**-096**	10.000
		1.632	1.1275	2.1255															
1 3/4	7GP1-2836-XXX	1.757	2.2545	2.2500	1.7500	0.1108	-052	-056	**-060**	**-064**	**-068**	**-072**	**-076**	**-080**	**-084**	**-088**	**-092**	**-096**	10.000
		1.758	2.2535	2.2510															
1 7/8	7GP1-3038-XXX	1.882	2.3795	2.3750	1.8750	0.1177	-052	-056	-060	**-064**	**-068**	**-072**	**-076**	**-080**	**-084**	**-088**	**-092**	**-096**	10.000
		1.883	2.3785	2.3760															
2	7GP1-3240-XXX	2.0085	2.5045	2.5000	2.0000	0.1243	-052	-056	-060	-064	**-068**	**-072**	**-076**	**-080**	**-084**	**-088**	**-092**	**-096**	10.000
		2.0095	2.5035	2.5010															
2 1/8	7GP1-3442-XXX	2.1335	2.6295	2.6250	2.1250	0.1306	-052	-056	-060	-064	-068	**-072**	**-076**	**-080**	**-084**	**-088**	**-092**	**-096**	10.000
		2.1345	2.6285	2.6260															
2 1/4	7GP1-3644-XXX	2.2585	2.7545	2.7500	2.2500	0.1374	-052	-056	-060	-064	-068	-072	**-076**	**-080**	**-084**	**-088**	**-092**	**-096**	10.000
		2.2595	2.7535	2.7510															
2 3/8	7GP1-3846-XXX	2.3835	2.8795	2.8750	2.3750	0.1442	-052	-056	-060	-064	-068	-072	-076	**-080**	**-084**	**-088**	**-092**	**-096**	10.000
		2.3845	2.8785	2.8760															
2 1/2	7GP1-4048-XXX	2.509	3.005	3.0000	2.5000	0.1511	-052	-056	-060	-064	-068	-072	-076	-080	**-084**	**-088**	**-092**	**-096**	10.000
		2.510	3.004	3.0015															
2 3/4	7GP1-4452-XXX	2.759	3.255	3.2500	2.7500	0.1648	-052	-056	-060	-064	-068	-072	-076	-080	-084	-088	**-092**	**-096**	10.000
		2.760	3.254	3.2515															
3	7GP1-4856-XXX	3.0080	3.5055	3.5000	3.0000	0.1790	-052	-056	-060	-064	-068	-072	-076	-080	-084	-088	-092	-096	10.000
		3.0105	3.5045	3.5020															
3 1/4	7GP1-5260-XXX	3.2580	3.3755	3.7500	3.2500	0.1928	-052	-056	-060	-064	-068	-072	-076	-080	-084	-088	-092	-096	10.000
		3.2605	3.3745	3.7520															
3 1/2	7GP1-5664-XXX	3.5080	4.0055	4.0000	3.5000	0.2066	-052	-056	-060	-064	-068	-072	-076	-080	-084	-088	-092	-096	10.000
		3.5105	4.0045	4.0020															
3 3/4	7GP1-6068-XXX	3.7580	4.2555	4.2500	3.7500	0.2203	-052	-056	-060	-064	-068	-072	-076	-080	-084	-088	-092	-096	10.000
		3.7605	4.2545	4.2520															
4	7GP1-6472-XXX	4.011	4.507	4.5000	4.0000	0.2334	-052	-056	-060	-064	-068	-072	-076	-080	-084	-088	-092	-096	10.000
		4.014	4.506	4.5020															
4 1/4	7GP1-6876-XXX	4.261	4.757	4.7500	4.2500	0.2459	-052	-056	-060	-064	-068	-072	-076	-080	-084	-088	-092	-096	10.000
		4.264	4.756	4.7520															
4 1/2	7GP1-7280-XXX	4.511	5.007	5.0000	4.5000	0.2596	-052	-056	-060	-064	-068	-072	-076	-080	-084	-088	-092	-096	10.000
		4.514	5.006	5.0020															
4 3/4	7GP1-7684-XXX	4.761	5.257	5.2500	4.7500	0.2732	-052	-056	-060	-064	-068	-072	-076	-080	-084	-088	-092	-096	10.000
		4.764	5.256	5.2520															
5	7GP1-8088-XXX	5.0105	5.507	5.5000	5.0000	0.2871	-052	-056	-060	-064	-068	-072	-076	-080	-084	-088	-092	-096	10.000
		5.0140	5.506	5.5020															

Standard MODEL SIZES are noted in BLACK. For MODEL SIZES in **(BOLD)** and shaded (Gray) consult with Rexnord Rex RPT Engineering.

Continued...

1/4 Inch Wall Straight Sleeve Bearing (Continued)

Continued...

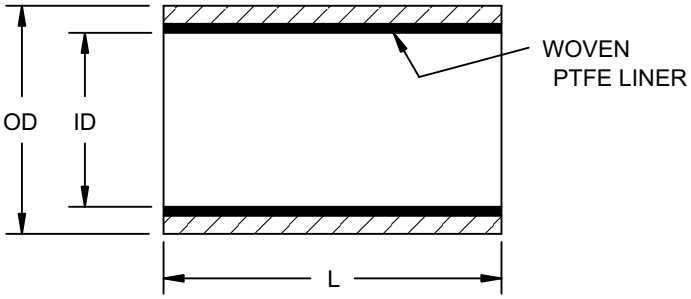

Bearing Dimensions

Bore Size	Part Number	ID	OD	Recommended Sizes: Housing Bore	Recommended Sizes: Max Shaft Dia	Recommended Sizes: Wt (Ref) Lb/In.	Model Number Suffix L= Length Suffix in Multiples of 1/16" (Tolerance +/-.010): 6.500	7.000	7.500	8.000	8.500	9.000	9.500	10.000 +/-.025	Maximum Length
1/2	7GP1-0816-XXX	0.506	1.0035	1.0000	0.5000	0.0417									6.000
		0.507	1.0025	1.0005											
5/8	7GP1-1018-XXX	0.631	1.1285	1.1250	0.6250	0.0486	**-104**	**-112**	**-120**	**-128**	**-136**	**-144**	**-152**	**-160**	10.000
		0.632	1.1275	1.1255											
3/4	7GP1-1220-XXX	0.756	1.2535	1.2500	0.7500	0.0555	**-104**	**-112**	**-120**	**-128**	**-136**	**-144**	**-152**	**-160**	10.000
		0.757	1.2525	1.2505											
7/8	7GP1-1422-XXX	0.881	1.3785	1.3750	0.8750	0.0624	**-104**	**-112**	**-120**	**-128**	**-136**	**-144**	**-152**	**-160**	10.000
		0.882	1.3775	1.3755											
1	7GP1-1624-XXX	1.006	1.5035	1.5000	1.0000	0.0693	**-104**	**-112**	**-120**	**-128**	**-136**	**-144**	**-152**	**-160**	10.000
		1.007	1.5025	1.5005											
1 1/8	7GP1-1826-XXX	1.131	1.6285	1.6250	1.1250	0.0762	**-104**	**-112**	**-120**	**-128**	**-136**	**-144**	**-152**	**-160**	10.000
		1.132	1.6275	1.6255											
1 1/4	7GP1-2028-XXX	1.256	1.7535	1.7500	1.2500	0.0831	**-104**	**-112**	**-120**	**-128**	**-136**	**-144**	**-152**	**-160**	10.000
		1.257	1.7525	1.7505											
1 3/8	7GP1-2230-XXX	1.381	1.8785	1.8750	1.3750	0.0900	**-104**	**-112**	**-120**	**-128**	**-136**	**-144**	**-152**	**-160**	10.000
		1.382	1.8775	1.8755											
1 1/2	7GP1-2432-XXX	1.506	2.0035	2.0000	1.5000	0.0970	**-104**	**-112**	**-120**	**-128**	**-136**	**-144**	**-152**	**-160**	10.000
		1.507	2.0025	2.0005											
1 5/8	7GP1-2634-XXX	1.631	2.1285	2.1250	1.6250	0.1039	**-104**	**-112**	**-120**	**-128**	**-136**	**-144**	**-152**	**-160**	10.000
		1.632	1.1275	2.1255											
1 3/4	7GP1-2836-XXX	1.757	2.2545	2.2500	1.7500	0.1108	**-104**	**-112**	**-120**	**-128**	**-136**	**-144**	**-152**	**-160**	10.000
		1.758	2.2535	2.2510											
1 7/8	7GP1-3038-XXX	1.882	2.3795	2.3750	1.8750	0.1177	**-104**	**-112**	**-120**	**-128**	**-136**	**-144**	**-152**	**-160**	10.000
		1.883	2.3785	2.3760											
2	7GP1-3240-XXX	2.0085	2.5045	2.5000	2.0000	0.1243	**-104**	**-112**	**-120**	**-128**	**-136**	**-144**	**-152**	**-160**	10.000
		2.0095	2.5035	2.5010											
2 1/8	7GP1-3442-XXX	2.1335	2.6295	2.6250	2.1250	0.1306	**-104**	**-112**	**-120**	**-128**	**-136**	**-144**	**-152**	**-160**	10.000
		2.1345	2.6285	2.6260											
2 1/4	7GP1-3644-XXX	2.2585	2.7545	2.7500	2.2500	0.1374	**-104**	**-112**	**-120**	**-128**	**-136**	**-144**	**-152**	**-160**	10.000
		2.2595	2.7535	2.7510											
2 3/8	7GP1-3846-XXX	2.3835	2.8795	2.8750	2.3750	0.1442	**-104**	**-112**	**-120**	**-128**	**-136**	**-144**	**-152**	**-160**	10.000
		2.3845	2.8785	2.8760											
2 1/2	7GP1-4048-XXX	2.509	3.005	3.0000	2.5000	0.1511	**-104**	**-112**	**-120**	**-128**	**-136**	**-144**	**-152**	**-160**	10.000
		2.510	3.004	3.0015											
2 3/4	7GP1-4452-XXX	2.759	3.255	3.2500	2.7500	0.1648	**-104**	**-112**	**-120**	**-128**	**-136**	**-144**	**-152**	**-160**	10.000
		2.760	3.254	3.2515											
3	7GP1-4856-XXX	3.0080	3.5055	3.5000	3.0000	0.1790	**-104**	**-112**	**-120**	**-128**	**-136**	**-144**	**-152**	**-160**	10.000
		3.0105	3.5045	3.5020											
3 1/4	7GP1-5260-XXX	3.2580	3.3755	3.7500	3.2500	0.1928	-104	**-112**	**-120**	**-128**	**-136**	**-144**	**-152**	**-160**	10.000
		3.2605	3.3745	3.7520											
3 1/2	7GP1-5664-XXX	3.5080	4.0055	4.0000	3.5000	0.2066	-104	-112	**-120**	**-128**	**-136**	**-144**	**-152**	**-160**	10.000
		3.5105	4.0045	4.0020											
3 3/4	7GP1-6068-XXX	3.7580	4.2555	4.2500	3.7500	0.2203	-104	-112	-120	**-128**	**-136**	**-144**	**-152**	**-160**	10.000
		3.7605	4.2545	4.2520											
4	7GP1-6472-XXX	4.011	4.507	4.5000	4.0000	0.2334	-104	-112	-120	-128	**-136**	**-144**	**-152**	**-160**	10.000
		4.014	4.506	4.5020											
4 1/4	7GP1-6876-XXX	4.261	4.757	4.7500	4.2500	0.2459	-104	-112	-120	-128	-136	**-144**	**-152**	**-160**	10.000
		4.264	4.756	4.7520											
4 1/2	7GP1-7280-XXX	4.511	5.007	5.0000	4.5000	0.2596	-104	-112	-120	-128	-136	-144	**-152**	**-160**	10.000
		4.514	5.006	5.0020											
4 3/4	7GP1-7684-XXX	4.761	5.257	5.2500	4.7500	0.2732	-104	-112	-120	-128	-136	-144	-152	**-160**	10.000
		4.764	5.256	5.2520											
5	7GP1-8088-XXX	5.0105	5.507	5.5000	5.0000	0.2871	-104	-112	-120	-128	-136	-144	-152	-160	10.000
		5.0140	5.506	5.5020											

Standard MODEL SIZES are noted in BLACK. For MODEL SIZES in **(BOLD)** and shaded (Gray) consult with Rexnord Rex RPT Engineering.

Filament Bearings
Custom: Duralon

Contents

Contents	Page
Features and Benefits	514
Nomenclature	515
Engineering	516
Dimensions	
Sleeve	517
Annular	524
Flange	525
Thrust Washers	526
Annular	527
Mounting	528

Industries Served

Construction
Agriculture
Food
Marine

Filament Bearings

Rexnord Duralon Filament Bearings are a self-lubricated bearing, normally used between 4,000 and 30,000 psi in sliding and oscillating linkages. It is constructed from woven Teflon▼ high strength fiber and bondable yarns to make up the bearing element. Continuous strands of fiberglass and epoxy resin make up the matrix of the composite bearing material.

Features and Benefits

Strength

Applications that have 30,000 psi dynamically
Optimizes strength/weight ratio

Corrosion Resistance

Resists galvanic and fretting corrosion

Self-Lubricating

Eliminates contaminating lubricants
Operates above or below useful temperature of lubricants
Eliminates complex lubrication systems
Minimizes slipstick problems

Seizure Resistance

Minimizes galling and scoring

Lightweight

77% of steel weight, 30% of aluminum – easier handling, reduces equipment weight

Non-Metallic

Electrical insulation
Reduces noise volumes
USDA approved for non-contact use

Sizes and Shapes Available

Straight Sleeve Bearings

Round, Square and Hex Bore
Round Bore Diameter – 1/8" to 26"
PTFE fabric on ID bore and optional on OD

Linear Bearings

Bore Diameter – 1/4" to 4"
Available in open configuration to clear pedestal shaft mounts

Flange Bearings

Bore Diameter – 1/8" to 26"
Available with or without woven PTFE liner on the flange face

Thrust Washers

Outer Diameter – 3/8" to 18"

Spherical Annular

Bore Diameter - 1/4" to 6"

Actuator Bearing

Bore Diameter – consult Rexnord Engineering
Bore Shapes – Helical and threaded

▼ Teflon™ is a trademark of The Chemours Company FC, LLC used under license by Toray Flurofibers (America), Inc.

Nomenclature

7010 - 000 008 - 016

Symbol	Description
701	Straight Sleeve Bearing
702	Flange Sleeve, No PTFE Fabric on the Flange Face
703	Flange Sleeve, PTFE Fabric on the Flange Face
706	Actuator Nut
707	Thrust Washer, PTFE Fabric on one face or both
708	OD lined Sleeve Bearing, Cylindrical O.D.
710	Ball Bearing Replacement, Cylindrical O.D.
711	Ball Bearing Replacement, Spherical O.D., without Fabric on the O.D.
718	Ball Bearing Replacement, Spherical O.D., PTFE Fabric on the O.D.
799	Special Bearing Configuration
00	Catalog Thinwall Bearing
01	Catalog Heavywall Bearing
61	Open Linear Replacement Bearing
66	Catalog Linear Replacement Bearing
70	Catalog Square Bore Bearing
90	Catalog Hex Bore Bearing
008	Bore Size (1 inch = 016)
016	Bearing Length The length of the bearing in 1/32 of an inch increments

Design and Application Guidelines

The overall performance of filament wound bearings is directly affected by operating factors such as applied loads, operating motions, duty cycle, environmental conditions, installation methods, shaft finish and hardness. While specific design criteria are not available for all applications, certain guidelines must be followed to provide the rated life.

Loads and Ratings

The filament wound back-up material in Duralon journal bearings is capable of withstanding static radial load levels as high as 60,000 psi on the projected bearing area. This is in excess of the fabric liner capability of (50,000 psi) based on previous experiences. The load deflection relationship of Duralon journal bearings and metal-backed Teflon▼ lined bearings is very similar. The yield point and ultimate strength of the filament wound back-up material are approximately equal.

$$PSI = \frac{\text{Load lbs.}}{\text{I.D. x W}}$$

Load-life Relationship

Since accumulated wear terminates the useful life of a properly selected Teflon▼ liner bearing, the Duralon selection procedure is based on the use of Bearing Area Factors(BAF), rather than load ratings, to select a bearing which meets the combined load-life requirements of the application. The Bearing Area Factor (BAF) is a numerical index of a bearing's dynamic performance ability and is based upon effective bearing area.

Duralon bearings are rated on the basis of L10 life expectancy which means that 90% of a given group of bearings will exceed the predicted life. The correlation of load and life is shown in the lower half of the Selection Chart which relates the BAF to cycle of life. BAF values for bearings involving standard combinations of bore and length, are shown in the bearing listings.

Bearing Area Factor

$$BAF = I.D.^{0.491} \times (W - .090)$$

I.D. = Bearing Inner Diameter

W = Bearing Length

All dimensions are in inches

Motion

Duralon bearings can withstand various degrees of motion, depending upon speed and load. They will operate under all degrees of motion normally encountered in applications. Note that the degree of oscillation can affect bearing performance and must be taken into account when making a bearing selection, as shown on the nomograph.

Laboratory testing of Filament journal bearings has shown their capacity to operate successfully under the low speeds, (less than 90 cycles per minute), high load conditions, (up to 30,000 psi), as well as the high speeds (up to 300 cpm), light load (less than 5,000 psi) conditions.

Temperature

The normal operating temperature range for Duralon bearings is -65º to 325º F. Satisfactory operation can be obtained with limited exposure to temperatures as high as 400º F. However, at continuous temperatures above 325º F an increase in wear rates will be experienced. Contact a Rexnord engineer for applications at cryogenic temperature, as well as for applications.

Shaft Recommendations

Since the shaft surface significantly affects the operation of the journal bearing design, its selection in regard to material, hardness, coating and surface roughness is crucial.

High loads require smooth surfaces with hardened and heat treated shafts. With stress levels of 8,000 to 30,000 psi shafting should have a surface finish of 8 micro inch or better to achieve optimum performance. However, tests have been run on 25-30 micro inch finishes with 55 Rc shafts at 4,000 psi with acceptable results.

Shafting Materials

A number of shaft materials have been used in conjunction with Duralon bearings:

1. 52100 high carbon steel
2. 4140 chrome and nickel plated steel
3. 300 and 400 series stainless steel
4. Precipitation hardened grades 17-4PH, 15-5PH, 13-8PH Moly chrome and nickel plated stainless steel
5. 2000 and 7000 series aluminum grade hard-anodized
6. Low to high carbon steels

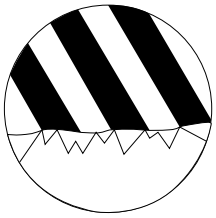

Sharp surface scratches

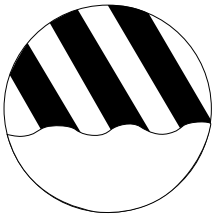

Smooth surface scratches

Surface roughness values do not define the character of the finish. Polished shafting (right) normally produces longer bearing life.

Thinwall Straight Sleeve Bearing

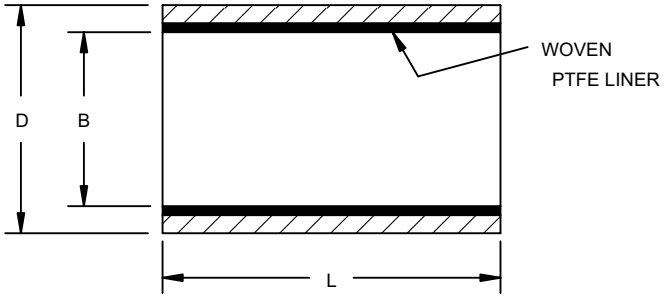

Product Features

The bearing consists of a self-lubricating woven Teflon ▼ fiber and polyester liner supported by a filament wound continuous fiberglass fiber and epoxy resin matrix.

Bearing Dimensions

Thinwall						Model Number Suffix L= Length Suffix in Multiples of 1/32" (Tolerance +.000/-.020)													Maximum Length
Part Number	B ±.0005	D ±.0005	Hsg Bore ±.0005	Max Shaft Dia	Wt (Ref) Lb/In.	0.250	0.375	0.500	0.625	0.750	0.875	1.000	1.125	1.250	1.375	1.500	1.750	2.000	
701-00004-XXX	0.2535	0.3762	0.3750	0.2500	0.0043														3.000
701-00006-XXX	0.3785	0.5012	0.5000	0.3750	0.0060	008								040	044				6.000
701-00008-XXX	0.5035	0.6262	0.6250	0.5000	0.0077		012									048			6.000
701-00010-XXX	0.6285	0.7512	0.7500	0.6250	0.0094			016									056	064	10.000
701-00012-XXX	0.7535	0.8762	0.8750	0.7500	0.0111				020										10.000
701-00014-XXX	0.8785	1.0637	1.0625	0.8750	0.0199					024	028								10.000
701-00016-XXX	1.0035	1.1887	1.1875	1.0000	0.0224							032							10.000
701-00018-XXX	1.1285	1.3137	1.3125	1.1250	0.0250														10.000
701-00020-XXX	1.2535	1.4387	1.4375	1.2500	0.0276								036						10.000
701-00022-XXX	1.3785	1.5637	1.5625	1.3750	0.0301														10.000
701-00024-XXX	1.5035	1.6887	1.6775	1.5000	0.0325	008								040	044				10.000
701-00026-XXX	1.6285	1.8137	1.8125	1.6250	0.0352		012									048			10.000
701-00028-XXX	1.7535	1.9387	1.9375	1.7500	0.0378			016									056	064	10.000
701-00030-XXX	1.8785	2.0637	2.0625	1.8750	0.0404				020										10.000
701-00032-XXX	2.0035	2.1887	2.1875	2.0000	0.0429					024									10.000
701-00034-XXX	2.1285	2.3137	2.3125	2.1250	0.0455						028								10.000
701-00036-XXX	2.2535	2.4387	2.4375	2.2500	0.0480							032							10.000
701-00040-XXX	2.5035	2.6887	2.6875	2.5000	0.0532														10.000
701-00044-XXX	2.7545	2.9487	2.9475	2.7500	0.0612								036						10.000

Additional Notes

Size: Standard & Metric sizes - from .250" to 2.750" inside diameter
Load: Typical dynamic loads - 4,000 to 30,000 psi, Ultimate 77,000 psi
Motion: Oscillatory, pivot, linear sliding and slow speed full rotation
Friction: Coefficients vary from .16 @ 500 psi to .07 @ 20,000 psi
Electrical: Filament wound back-up material is an electrical insulator
Chemical: Resistant to most chemicals, see Appendix or consult Rexnord engineer
Temperature: -65°F to +325°F for Continuous, 400°F for Intermittent

For part number sizes shaded in gray please consult Rexnord Bearing Engineering

Thinwall Straight Sleeve Bearing (Inch)

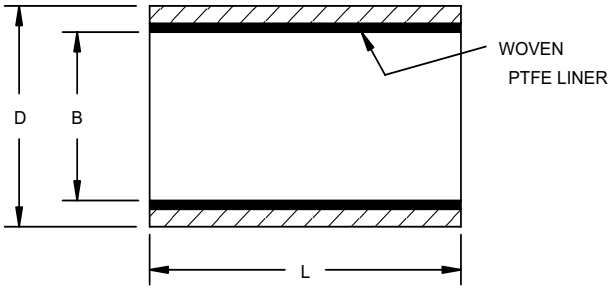

Product Features

The bearing consists of a self-lubricating woven Teflon▾ fiber and polyester liner supported by a filament wound continuous fiberglass fiber and epoxy resin matrix.

Bearing Dimensions

Thinwall - Metric					Model Number Suffix L= Length Suffix in Multiples of 1mm (Tolerance +.000/-.500)									
Part Number	B ±.0005	D ±.0005	Hsg Bore ±.0003	Max Shaft Dia	0.250	0.375	0.500	0.625	0.750	0.875	1.000	1.125	1.250	1.375
7MM1-02006-XXX	0.2397	0.3163	0.3153	0.2358	010	020	030	040	050	060	070	080	090	100
7MM1-03006-XXX	0.2397	0.3556	0.3546	0.2358										
7MM1-02008-XXX	0.3185	0.3950	0.3940	0.3144								080	090	100
7MM1-03008-XXX	0.3185	0.4344	0.4334	0.3144										
7MM1-02010-XXX	0.3972	0.4738	0.4727	0.3932										
7MM1-03010-XXX	0.3972	0.5132	0.5121	0.3932										
7MM1-02012-XXX	0.4759	0.5526	0.5515	0.4718										
7MM1-03012-XXX	0.4759	0.592	0.5909	0.4718										
7MM1-02014-XXX	0.5547	0.6313	0.6302	0.5506										
7MM1-03014-XXX	0.5547	0.7101	0.7090	0.5506										
7MM1-02016-XXX	0.6334	0.7101	0.7090	0.6293										
7MM1-03016-XXX	0.6334	0.7889	0.7878	0.6293										
7MM1-02018-XXX	0.7122	0.7889	0.7878	0.7080										
7MM1-03018-XXX	0.7122	0.8677	0.8665	0.7080										
7MM1-02020-XXX	0.7909	0.9070	0.9059	0.7866										
7MM1-03020-XXX	0.7909	0.9464	0.9453	0.7866										
7MM1-02022-XXX	0.8696	0.9858	0.9846	0.8654										
7MM1-03022-XXX	0.8696	1.0645	1.0634	0.8654										
7MM1-02025-XXX	0.9877	1.1039	1.1028	0.9835										
7MM1-03025-XXX	0.9877	1.1826	1.1815	0.9835										
7MM1-02030-XXX	1.1846	1.3403	1.3391	1.1803	010									
7MM1-03030-XXX	1.1846	1.3795	1.3784	1.1803										
7MM1-02040-XXX	1.5783	1.7340	1.7328	1.5738										
7MM1-03040-XXX	1.5783	1.8127	1.8115	1.5738										
7MM1-02045-XXX	1.7751	1.9702	1.9690	1.7707		020								
7MM1-03045-XXX	1.7751	2.0096	2.0084	1.7707										
7MM1-02050-XXX	1.9720	2.1672	2.1659	1.9675										
7MM1-03050-XXX	1.9720	2.2851	2.2839	1.9675										

Additional Notes

Size: Metric sizes - from 1/8" to 26" inside diameter
Load: Typical dynamic loads - 4,000 to 30,000 psi, Ultimate 77,000 psi
Motion: Oscillatory, pivot, linear sliding and slow speed full rotation
Friction: Coefficients vary from .16 @ 500 psi to .07 @ 20,000 psi
Electrical: Filament wound back-up material is an electrical insulator
Chemical: Resistant to most chemicals, see Appendix or consult Rexnord engineer
Temperature: -65°F to +325°F for Continuous, 400°F for Intermittent

For part number sizes shaded in gray please consult Rexnord Bearing Engineering

Thinwall Straight Sleeve Bearing (Metric)

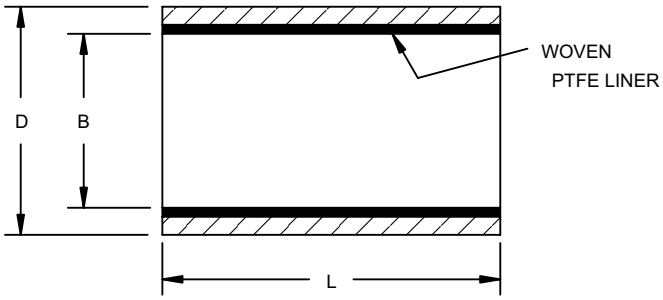

Product Features

The bearing consists of a self-lubricating woven Teflon▼ fiber and polyester liner supported by a filament wound continuous fiberglass fiber and epoxy resin matrix.

Bearing Dimensions

Thinwall - Metric							Model Number Suffix L= Length Suffix in Multiples of 1mm (Tolerance +.000/-.500)									
Part Number	B	Tolerance	D	Tolerance	Max Hsg Bore	Max Shaft Dia	10	20	30	40	50	60	70	80	90	100
7MM1-02006-XXX	6,0855	,0125	8,034	,013	,8000	5,978	010	020	030	040	050	060	070	080	090	100
7MM1-03006-XXX	6,0855	,0125	9,032	,012	,9000	5,978										
7MM1-02008-XXX	8,0900	,0130	10,033	,013	,10000	7,972								080	090	100
7MM1-03008-XXX	8,0900	,0130	11,033	,012	,11000	7,972										
7MM1-02010-XXX	10,0890	,0130	12,034	,012	,12000	9,972										
7MM1-03010-XXX	10,0890	,0130	13,035	,012	,13000	9,972										
7MM1-02012-XXX	12,0880	,0130	14,036	,013	,14000	11,966										
7MM1-03012-XXX	12,0880	,0130	15,037	,013	,15000	11,966										
7MM1-02014-XXX	14,0895	,0125	16,035	,013	,16000	13,966										
7MM1-03014-XXX	14,0895	,0125	18,036	,012	,18000	15,966										
7MM1-02016-XXX	16,0885	,0125	18,036	,012	,18000	15,966										
7MM1-03016-XXX	16,0885	,0125	20,038	,013	,20000	15,966										
7MM1-02018-XXX	18,0900	,0130	20,038	,013	,20000	17,966										
7MM1-03018-XXX	18,0900	,0130	22,039	,012	,22000	17,966										
7MM1-02020-XXX	20,0890	,0130	23,038	,013	,23000	19,959										
7MM1-03020-XXX	20,0890	,0130	23,038	,012	,24000	19,959										
7MM1-02022-XXX	22,0880	,0130	25,039	,012	,25000	21,959										
7MM1-03022-XXX	22,0880	,0130	27,038	,012	,27000	21,959										
7MM1-02025-XXX	25,0875	,0125	28,039	,013	,28000	24,959										
7MM1-03025-XXX	25,0875	,0125	30,038	,013	,30000	24,959										
7MM1-02030-XXX	30,0890	,0130	34,043	,013	,34000	29,959	010									
7MM1-03030-XXX	30,0890	,0130	35,039	,012	,35000	29,959										
7MM1-02040-XXX	40,0890	,0130	44,043	,013	,44000	39,950										
7MM1-03040-XXX	40,0890	,0130	46,043	,012	,46000	39,950										
7MM1-02045-XXX	45,0875	,0125	50,043	,013	,50000	44,950		020								
7MM1-03045-XXX	45,0875	,0125	51,044	,013	,51000	44,950										
7MM1-02050-XXX	50,0890	,0130	55,047	,013	,55000	49,950										
7MM1-03050-XXX	50,0890	,0130	58,041	,012	,58000	49,950										

Additional Notes

Size: Metric sizes - from 4mm to 660mm
Load: Typical dynamic loads - 4,000 to 30,000 psi, Ultimate 77,000 psi
Motion: Oscillatory, pivot, linear sliding and slow speed full rotation
Friction: Coefficients vary from .16 @ 500 psi to .07 @ 20,000 psi
Electrical: Filament wound back-up material is an electrical insulator
Chemical: Resistant to most chemicals, see Appendix or consult Rexnord engineer
Temperature: -65°F to +325°F for Continuous, 400°F for Intermittent

For part number sizes shaded in gray please consult Rexnord Bearing Engineering

Heavywall Straight Sleeve Bearing

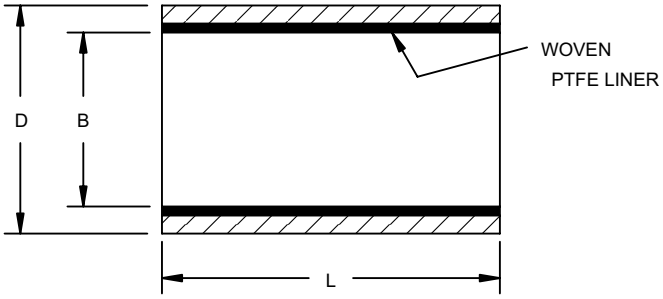

Product Features

The bearing consists of a self-lubricating woven Teflon▾ fiber and polyester liner supported by a filament wound continuous fiberglass fiber and epoxy resin matrix.

Bearing Dimensions

Heavywall									Model Number Suffix L= Length Suffix in Multiples of 1/32" (Tolerance +.000/-.020)										
Part Number	B	Tolerance	D	Tolerance	Housing Bore	Tolerance	Max Shaft Dia	Wt (Ref) Lb/In.	1.000	1.250	1.500	1.750	2.000	2.500	3.000	3.500	4.000	6.000	10.000
701-01028-XXX	1.7590		2.2505		2.2470		1.7500	0.1086											
701-01032-XXX	2.0090		2.5005		2.4970		2.0000	0.1222	032	040	048	056	064	080	096	112	128	192	320
701-01036-XXX	2.2590	±.0010	2.7505		2.7470		2.2500	0.1357											
701-01040-XXX	2.5090		3.0005		2.9970		2.5000	0.1493											
701-01044-XXX	2.7590		3.2505		3.2470		2.7500	0.1628											
701-01048-XXX	3.0097		3.5005		3.4970		3.0000	0.1762											
701-01052-XXX	3.2597	+0.0013	3.7505		3.7470		3.2500	0.1898											
701-01056-XXX	3.5097	-0.0012	4.0005	±.0005	3.9970		3.5000	0.2033											
701-01060-XXX	3.7597		4.2505		4.2470		3.7500	0.2169											
701-01064-XXX	4.0105		4.5005		4.4970	±.001	4.0000	0.2302											
701-01068-XXX	4.2605	±.0015	4.7505		4.7470		4.2500	0.2437											
701-01072-XXX	4.5125		5.0005		4.9970		4.5000	0.2562											
701-01076-XXX	4.7615		5.2505		5.2470		4.7500	0.2702											
701-01080-XXX	5.0112		5.5005		5.4970		5.0000	0.2840											
701-01084-XXX	5.2612	+.0018	5.7505		5.7470		5.2500	0.2975											
701-01088-XXX	5.5142	.0017	6.0008		5.9960		5.5000	0.3095											
701-01092-XXX	5.7642		6.2508		6.2460		5.7500	0.3230											
701-01096-XXX	6.0140		6.5008		6.4960		6.0000	0.3367											
701-01100-XXX	6.6240	±.0020	6.7508		6.7460		6.2500	0.3502	032	040	048	056	064	080	096	112	128	192	320
701-01104-XXX	6.5140		7.0008	+.0007 -.0008	6.9955		6.5000	0.3636											
701-01108-XXX	6.7640		7.2508		7.2455		6.7500	0.3771											
701-01112-XXX	7.0137	+.0023	7.5008		7.4955		7.0000	0.3910											
701-01120-XXX	7.5137	-.0022	8.0008		7.9955		7.5000	0.4179											
701-01128-XXX	8.0135		8.2508		8.4955		8.0000	0.4453											
701-01136-XXX	8.5135		9.0010		8.9955		8.5000	0.4727											
701-01144-XXX	9.0135		9.5010		9.4955	±.0015	9.0000	0.4997											
701-01152-XXX	9.5135		10.0010		9.9955		9.5000	0.5267											
701-01160-XXX	10.0135	±.0025	10.5010	±.0010	10.4955		10.0000	0.5537											
701-01168-XXX	10.5135		11.0010		10.9955		10.5000												
701-01176-XXX	11.0135		11.5010		11.4955		11.0000												
701-01184-XXX	11.5135		12.0010		11.9955		11.5000												
701-01192-XXX	12.0135		12.5010		12.4955		12.0000												

Additional Notes

Size: Standard & Metric sizes - from 1.750" to 12.000" inside diameter
Load: Typical dynamic loads - 4,000 to 30,000 psi, Ultimate 77,000 psi
Motion: Oscillatory, pivot, linear sliding and slow speed full rotation
Friction: Coefficients vary from .16 @ 500 psi to .07 @ 20,000 psi
Electrical: Filament wound back-up material is an electrical insulator
Chemical: Resistant to most chemicals, see Appendix or consult Rexnord engineer
Temperature: -65°F to +325°F for Continuous, 400°F for Intermittent

For part number sizes shaded in gray please consult Rexnord Bearing Engineering

Square Bore Bearing

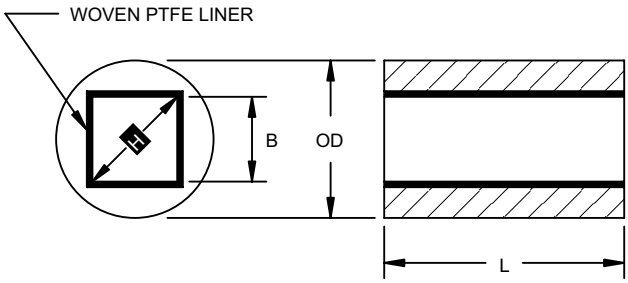

Bearing Dimensions

Square Bore				Model Number Suffix L= Length Suffix in Multiples of 1/32" (Tolerance +.000/-.020)													Maximum Length
Part Number	B ±.001	D ±.0005	H Min	0.250	0.375	0.500	0.625	0.750	0.875	1.000	1.125	1.250	1.375	1.500	1.750	2.000	
701-70004-XXX	0.254	0.5012	0.313	008	012	016	020	024	028	032	036	040	044	048	056	064	3.000
701-70006-XXX	0.379	0.7512	0.490														6.000
701-70008-XXX	0.504	0.8762	0.667														6.000
701-70010-XXX	0.629	1.0012	0.843	008								040	044				10.000
701-70012-XXX	0.754	1.2512	1.020														10.000
701-70014-XXX	0.879	1.5012	1.197		012									048			10.000
701-70016-XXX	1.004	1.6262	1.374												056	064	10.000
701-70018-XXX	1.129	1.8762	1.551			016											10.000
701-70020-XXX	1.254	2.0012	1.727														10.000
701-70022-XXX	1.379	2.2512	1.904				020										10.000
701-70024-XXX	1.504	2.5012	2.081														10.000

Additional Notes

Size: Standard sizes - from .250" to 1.500" inside diameter, larger sizes available

Load: Typical dynamic loads - 4,000 to 30,000 psi, Ultimate 77,000 psi

Motion: Linear sliding and/or torque transmission

Friction: Coefficients vary from .16 @ 500 psi to .07 @ 20,000 psi

Electrical: Filament wound back-up material is an electrical insulator

Chemical: Resistant to most chemicals, see Appendix or consult Rexnord engineer

Temperature: -65°F to +325°F for Continuous, 400°F for Intermittent

For part number sizes shaded in gray please consult Rexnord Bearing Engineering

Hex Bore Bearing

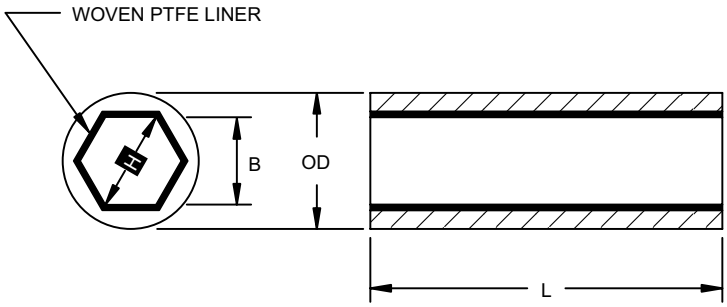

Product Features

The bearing consists of a self-lubricating woven Teflon▾ fiber and polyester liner supported by a filament wound continuous fiberglass fiber and epoxy resin matrix.

Bearing Dimensions

Hex Bore					Model Number Suffix L= Length Suffix in Multiples of 1/32" (Tolerance +.000/-.020)													Maximum Length
Part Number	B	Tolerance	OD ± .0005	H Min.	0.250	0.375	0.500	0.625	0.750	0.875	1.000	1.125	1.250	1.375	1.500	1.750	2.000	
701-90004-XXX	0.255	±.001	0.5012	0.248	008	012	016	020	024	028	032	036	040	044	048	056	064	3.000
701-90006-XXX	0.380		0.6262	0.392														6.000
701-90008-XXX	0.505		0.7512	0.537														6.000
701-90010-XXX	0.630		0.8762	0.681	008								040	044				10.000
701-90012-XXX	0.755		1.0012	0.825														10.000
701-90014-XXX	0.880		1.2512	0.970		012									048			10.000
701-90016-XXX	1.005		1.5004	1.114												056	064	10.000
701-90018-XXX	1.130	±.002	1.6262	1.259			016											10.000
701-90020-XXX	1.255		1.7512	1.403														10.000
701-90022-XXX	1.380		1.8762	1.547				020										10.000
701-90024-XXX	1.505		2.0012	1.692														10.000

Additional Notes

Size: Standard sizes - from .250" to 1.500" inside diameter
Load: Typical dynamic loads - 4,000 to 30,000 psi, Ultimate 77,000 psi
Motion: Linear sliding and/or torque transmission
Friction: Coefficients vary from .16 @ 500 psi to .07 @ 20,000 psi
Electrical: Filament wound back-up material is an electrical insulator
Chemical: Resistant to most chemicals, see Appendix or consult Rexnord engineer
Temperature: -65°F to +325°F for Continuous, 400°F for Intermittent

For part number sizes shaded in gray please consult Rexnord Bearing Engineering

Linear Composite Bearings

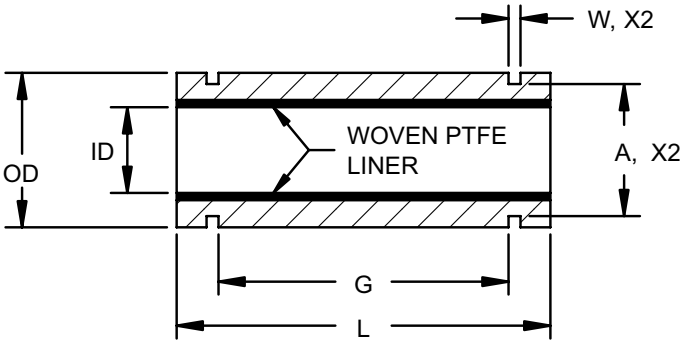

Product Features

The bearing consists of a self-lubricating woven Teflon▼ fiber and polyester liner supported by a filament wound continuous fiberglass fiber and epoxy resin matrix. Open Linear bearings for pedestal shaft mounts available.

Bearing Dimensions

Part Number	I.D.	Tolerance	OD ±.0005	L +.000 -.020	G	Tolerance	Snap Ring Groove				O.D to I.D. Concentricity
							W	Tolerance	A	Tolerance	
701-66004-024	0.2510	±.0005	0.5006	0.750	0.437	±.010	0.0405	±.0015	0.468	±.002	.001 TIR
701-66006-028	0.3760		0.6256	0.875	0.562		0.0405		0.588	±.003	
701-66008-040	0.5010		0.8756	1.250	0.875		0.0475		0.821		
701-66010-048	0.6260		1.1256	1.500	1.000		0.0580	±.0020	1.059	±.004	
701-66012-052	0.7510		1.2506	1.625	1.062		0.0580		1.176		
701-66016-072	1.0010		1.5631	2.250	1.625		0.0700		1.468	±.005	
701-66020-084	1.2510		2.0006	2.625	1.875	±.015	0.0700		1.886		
701-66024-096	1.5010		2.3756	3.000	2.250		0.0885	±.0025	2.239		
701-66032-128	2.0010		3.0006	4.000	3.000		0.1055		2.838		
701-60040-160	2.5055		3.7506	5.000	3.750		0.1225		3.493	±.006	.003 TIR
701-60048-192	3.0060	±.0010	4.5006	6.000	4.500		0.1225		4.190		
701-60064-256	4.0065	±.0015	6.0006	8.000	6.000	±.020	0.1420	±.0030	5.745		

Additional Notes

Size: Standard sizes - from .250" to 4.000" inside diameter
Load: Typical dynamic loads - 4,000 to 30,000 psi, Ultimate 77,000 psi
Motion: Oscillatory, pivot, linear sliding and slow speed full rotation
Friction: Coefficients vary from .16 @ 500 psi to .07 @ 20,000 psi
Electrical: Filament wound back-up material is an electrical insulator
Chemical: Resistant to most chemicals, see Appendix or consult Rexnord engineer
Temperature: -65°F to +325°F for Continuous, 400°F for Intermittent

Split Metallic Outer Race Annular Bearings

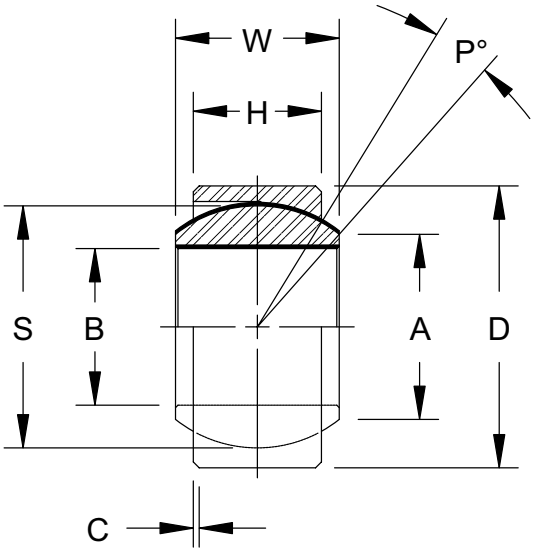

Product Features

The self-lubricating composite ball consists of a woven Teflon▾ fiber and polyester fiber liner supported by a filament wound continuous fiberglass fiber and epoxy resin matrix. The split metallic outer race is carbon steel.

Bearing Dimensions

Part Number	Part Number	B Min	Tolerance	D Max	Tolerance	W +.000 -.005	H +.000 -.005	A (Ref)	C +.010 -.010	P Deg. Min	S Ball O.D.	Limit Load Rating- Lbs.
831-08-14-01	838-08-14-01	0.5030		0.8750		0.437	0.375	0.571			0.719	3,750
831-12-20-01	838-12-20-01	0.7530		1.2500	+.000 -.0005	0.656	0.562	0.858			1.080	8,430
831-14-23-01	838-14-23-01	0.8780		1.4375		0.765	0.656	0.999			1.258	11,480
831-16-26-01	838-16-26-01	1.0030		1.6250		0.875	0.750	1.140			1.437	15,000
831-20-32-01	838-20-32-01	1.2530		2.0000		1.093	0.937	1.424			1.795	23,425
831-22-35-01	838-22-35-01	1.3780	+.001	2.1875		1.187	1.031	1.531			1.937	28,350
831-24-39-01	838-24-39-01	1.5030		2.4375	+.0006	1.312	1.125	1.710		6	2.155	33,750
831-28-45-01	838-28-45-01	1.7530		2.8125		1.531	1.312	1.995	0.022		2.515	45,925
831-32-51-01	838-32-51-01	2.0030		3.1875		1.750	1.500	2.281			2.875	60,000
831-36-57-01	838-36-57-01	2.2530		3.5625		1.969	1.687	2.567			3.235	75,900
831-40-63-01	838-40-63-01	2.5030		3.9375	+.0008	2.187	1.875	2.847			3.590	93,750
831-48-76-01	838-48-76-01	3.0030		4.7500		2.625	2.250	3.421			4.312	135,000
831-64-100-01	838-64-100-01	4.0030	+.003	6.2500	+.0010	3.500	3.000	4.562			5.750	240,000
831-80-124-01	838-80-124-01	5.0020	+.005	7.7500	+.0022	4.375	3.750	5.706			7.190	375,000
831-96-140-01	838-96-140-01	6.0030	+.004	8.7500		4.750	4.125	6.630		5	8.156	495,000

Additional Notes

Size: Standard & Metric sizes - from .500" to 6.000" inside diameter

Load: Typical dynamic loads - 4,000 to 20,000 psi

Motion: Oscillatory, pivot, slow speed full rotation, for linear consult Rexnord engineer

Friction: Coefficients vary from .16 @ 500 psi to .07 @ 20,000 psi

Electrical: Filament wound back-up material of the ball is an electrical insulator

Chemical: Consult Rexnord engineer

Temperature: -65°F to +325°F for Continuous, 400°F for Intermittent

Flange Bearings

Product Features

The bearing consists of a self-lubricating woven Teflon▼ fiber and polyester liner supported by a filament wound continuous fiberglass fiber and epoxy resin matrix.

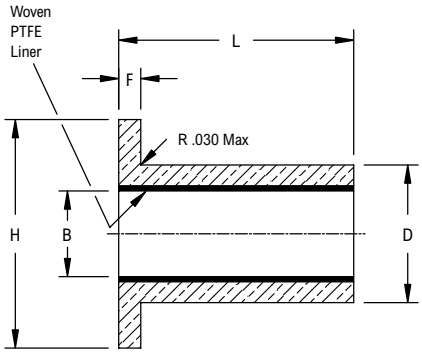

STYLE-702

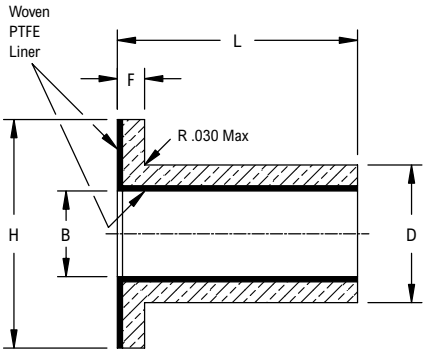

STYLE-703

Bearing Dimensions

Part Number		B ± .0005	D ± .0005	F ± .005	H ± .010	Model Number Suffix L = Length Suffix in Multiples of 1/32" (Tolerance + .000 / - .020)												
Unlined Face	Lined Face					0.250	0.375	0.500	0.625	0.750	0.875	1.000	1.125	1.250	1.375	1.500	1.750	2.000
702-00004-XXX	703-00004-XXX	0.2535	0.3762	0.094	0.625	008	012	016	020	024	028	032	036	040	044	048	056	064
702-00006-XXX	703-00006-XXX	0.3785	0.5012	0.125	0.750													
702-00008-XXX	703-00008-XXX	0.5035	0.6262	0.125	0.875	008												
702-00010-XXX	703-00010-XXX	0.6285	0.7512	0.125	1.000									040	044			
702-00012-XXX	703-00012-XXX	0.7535	0.8762	0.125	1.125		012											
702-00014-XXX	703-00014-XXX	0.8785	1.0637	0.125	1.312											048		
702-00016-XXX	703-00016-XXX	1.0035	1.1887	0.156	1.438			016									056	064
702-00018-XXX	703-00018-XXX	1.1285	1.3137	0.156	1.562													
702-00020-XXX	703-00020-XXX	1.2535	1.4387	0.156	1.688				020									
702-00022-XXX	703-00022-XXX	1.3785	1.5637	0.156	1.812													
702-00024-XXX	703-00024-XXX	1.5035	1.6887	0.156	1.938					024								
702-00026-XXX	703-00026-XXX	1.6285	1.8137	0.156	2.062													
702-00028-XXX	703-00028-XXX	1.7535	1.9387	0.188	2.188						028							
702-00030-XXX	703-00030-XXX	1.8785	2.0637	0.188	2.312													
702-00032-XXX	703-00032-XXX	2.0035	2.1887	0.188	2.438							032						
702-00034-XXX	703-00034-XXX	2.1285	2.3137	0.188	2.562													
702-00036-XXX	703-00036-XXX	2.2535	2.4387	0.188	2.688								036					
702-00040-XXX	703-00040-XXX	2.5035	2.6887	0.188	2.938													

Additional Notes

Size: Standard sizes - from .250" to 2.500" inside diameter

Load: Typical dynamic loads - 4,000 to 30,000 psi, Ultimate 77,000 psi

Motion: Oscillatory, pivot, linear sliding and slow speed full rotation

Friction: Coefficients vary from .16 @ 500 psi to .07 @ 20,000 psi

Electrical: Filament wound back-up material is an electrical insulator

Chemical: Resistant to most chemicals, see Appendix or consult Rexnord engineer

Temperature: -65°F to +325°F for Continuous, 400°F for Intermittent - Style 702
-65°F to +250°F for Continuous or Intermittent - Style 703

For part number sizes shaded in gray please consult Rexnord Bearing Engineering

Thrust Washers

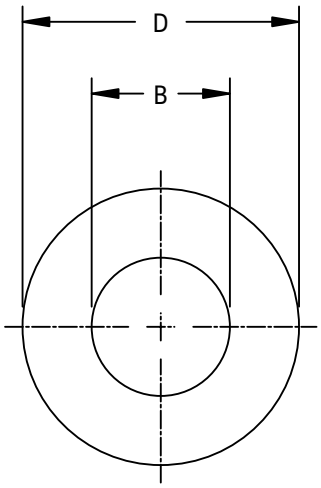

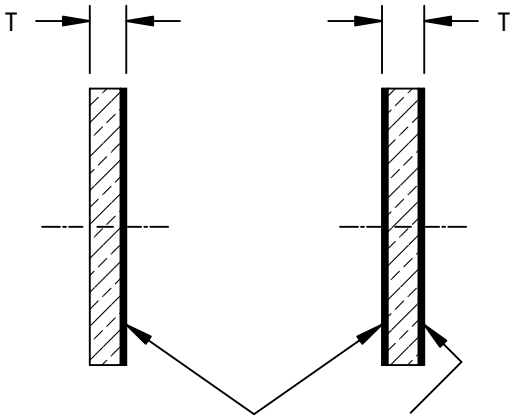

Woven PTFE Liner

Product Features

The thrust washer is constructed by bonding woven Teflon▼ fiber fabric liner to one or both faces of a washer substrate. The substrate may be metallic, such as low carbon steel, stainless steel or aluminum. It may also be a non-metallic substrate such as NEMA grade G-10 or NEMA grade C. Standard washers are made with G-10 substrate.

Bearing Dimensions

Nominal Shaft Diameter	Part Number - 1/16" Thickness		B + .020 - .000	D + .000 - .020	T ± .005
	Lined One Face	Lined Both Faces			
0.250	707-00008-002	707-20008-002	0.270	0.500	0.062
0.312	707-00010-002	707-20010-002	0.332	0.625	0.062
0.375	707-00012-002	707-20012-002	0.395	0.750	0.062
0.437	707-00014-002	707-20014-002	0.457	0.875	0.062
0.500	707-00016-002	707-20016-002	0.520	1.000	0.062
0.625	707-00020-002	707-20020-002	0.645	1.250	0.062
0.750	707-00024-002	707-20024-002	0.770	1.500	0.062
0.875	707-00028-002	707-20028-002	0.895	1.750	0.062
1.000	707-00032-002	707-20032-002	1.020	2.000	0.062
1.125	707-00034-002	707-20034-002	1.145	2.125	0.062
1.250	707-00036-002	707-20036-002	1.270	2.250	0.062
1.375	707-00040-002	707-20040-002	1.395	2.500	0.062
1.500	707-00042-002	707-20042-002	1.520	2.625	0.062
1.625	707-00044-002	707-20044-002	1.645	2.750	0.062
1.750	707-00046-002	707-20046-002	1.770	2.875	0.062
1.875	707-00048-002	707-20048-002	1.895	3.000	0.062
2.000	707-00052-002	707-20052-002	2.020	3.250	0.062

Nominal Shaft Diameter	Part Number - 1/8" Thickness		B + .020 - .000	D + .000 - .020	T ± .005
	Lined One Face	Lined Both Faces			
0.250	707-00008-004	707-20008-004	0.270	0.500	0.125
0.312	707-00010-004	707-20010-004	0.332	0.625	0.125
0.375	707-00012-004	707-20012-004	0.395	0.750	0.125
0.437	707-00014-004	707-20014-004	0.457	0.875	0.125
0.500	707-00016-004	707-20016-004	0.520	1.000	0.125
0.625	707-00020-004	707-20020-004	0.645	1.250	0.125
0.750	707-00024-004	707-20024-004	0.770	1.500	0.125
0.875	707-00028-004	707-20028-004	0.895	1.750	0.125
1.000	707-00032-004	707-20032-004	1.020	2.000	0.125
1.125	707-00034-004	707-20034-004	1.145	2.125	0.125
1.250	707-00036-004	707-20036-004	1.270	2.250	0.125
1.375	707-00040-004	707-20040-004	1.395	2.500	0.125
1.500	707-00042-004	707-20042-004	1.520	2.625	0.125
1.625	707-00044-004	707-20044-004	1.645	2.750	0.125
1.750	707-00046-004	707-20046-004	1.770	2.875	0.125
1.875	707-00048-004	707-20048-004	1.895	3.000	0.125
2.000	707-00052-004	707-20052-004	2.020	3.250	0.125

Additional Notes

Size: Standard sizes - from .250" to 2.000" inside diameter
Load: Typical dynamic loads - 4,000 to 20,000 psi, Ultimate 60,000 psi
Motion: Oscillatory and slow speed full rotation
Friction: Coefficients vary from .16 @ 500 psi to .07 @ 20,000 psi
Electrical: G-10 substrate material is an electrical insulator
Chemical: Resistant to most chemicals, see Appendix or consult Rexnord engineer
Temperature: Cryogenic to +250°F

For part number sizes shaded in gray please consult Rexnord Bearing Engineering

Annular Bearings

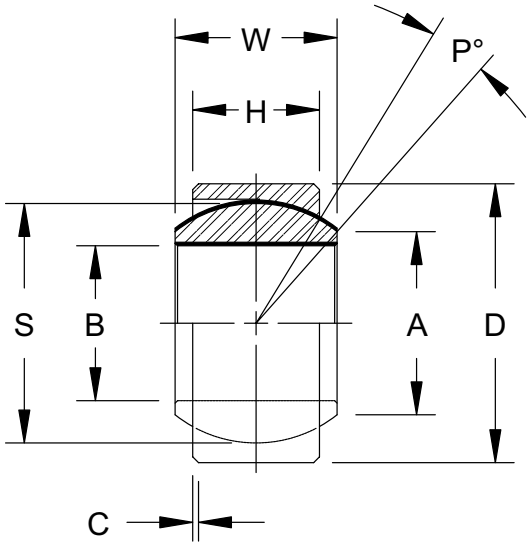

Product Features

The self-lubricating bearing element consists of a woven Teflon▾ fiber and polyester fiber liner supported by a filament wound continuous fiberglass fiber and epoxy resin matrix. The mating element (wear surface) is metallic.

Bearing Dimensions

Part Number	B +.000 -.001	D +.001 -.000	W +.000 -.005	H +.000 -.005	A (Ref)	C +.010 -.010	P Deg. Max	S Ball O.D.	Limit Load Rating- Lbs.
801-08-14-01	0.500	0.8750	0.437	0.375	0.571	0.015	6	0.719	5,400
801-12-20-01	0.750	1.2500	0.656	0.562	0.858			1.080	12,140
801-14-23-01	0.875	1.4375	0.765	0.656	0.999			1.258	16,500
801-16-26-01	1.000	1.6250	0.875	0.750	1.140			1.437	21,560
801-20-32-01	1.250	2.0000	1.093	0.937	1.424			1.795	33,640
801-22-35-01	1.375	2.1875	1.187	1.031	1.531			1.937	40,000
801-24-39-01	1.500	2.4375	1.312	1.125	1.710			2.155	48,480
801-28-45-01	1.750	2.8125	1.531	1.312	1.995			2.515	66,000
801-32-51-01	2.000	3.1875	1.750	1.500	2.281			2.875	86,250
801-36-57-01	2.250	3.5625	1.969	1.687	2.567			3.235	109,150
801-40-63-01	2.500	3.9375	2.187	1.875	2.847			3.590	134,620
801-48-76-01	3.000	4.7500	2.625	2.250	3.421			4.312	194,040
801-64-100-01	4.000	6.2500	3.500	3.000	4.562			5.750	345,000
801-80-124-01	5.000	7.7500	4.375	3.750	5.706			7.190	539,250
801-96-140-01	6.000	8.7500	4.750	4.125	6.630		5	8.156	672,870

Part Number	B +.000 -.001	D +.001 -.000	W +.000 -.005	H +.000 -.005	A (Ref)	C +.010 -.010	P Deg. Max	S Ball O.D.	Limit Load Rating- Lbs.
821-04-10-01	0.2520	0.6562	0.3430	0.2500	0.4050	0.0200	12	0.5300	6,300
821-05-12-01	0.3150	0.7500	0.3750	0.2810	0.4190		11	0.5625	7,490
821-06-13-01	0.3770	0.8125	0.4060	0.3120	0.4750	0.0250	10	0.6250	9,060
821-07-14-01	0.4400	0.9062	0.4370	0.3430	0.5290		9	0.6855	11,380
821-08-16-01	0.5020	1.0000	0.5000	0.3900	0.6400	0.0300		0.8125	15,750
821-09-18-01	0.5650	1.0937	0.5620	0.4370	0.6710	0.0300	10	0.8750	18,980
821-10-19-01	0.6270	1.1875	0.6250	0.5000	0.7390		9	0.9680	24,180
821-12-23-01	0.7520	1.4375	0.7500	0.5930	0.9200			1.1870	36,170
821-14-25-01	0.8770	1.5625	0.8750	0.7030	0.9780			1.3120	48,160
821-16-28-01	1.0020	1.7500	1.0000	0.7970	1.1180			1.5000	63,100
801-40-63-01	2.500	3.9375	2.187	1.875	2.847	0.015	6	3.590	134,620
801-48-76-01	3.000	4.7500	2.625	2.250	3.421			4.312	194,040
801-64-100-01	4.000	6.2500	3.500	3.000	4.562			5.750	345,000
801-80-124-01	5.000	7.7500	4.375	3.750	5.706			7.190	539,250
801-96-140-01	6.000	8.7500	4.750	4.125	6.630		5	8.156	672,870

Additional Notes

Size: Standard sizes - from .250" (821 Series) to 6.000" (801 Series) inside diameter

Load: Typical dynamic loads - 4,000 to 20,000 psi

Motion: Oscillatory, pivot, slow speed full rotation, for linear consult Rexnord engineer

Friction: Coefficients vary from .16 @ 500 psi to .07 @ 20,000 psi

Electrical: The composite component filament wound back-up material is an electrical insulator

Chemical: Resistant to most chemicals, consult Rexnord engineer

Temperature: -65°F to +325°F for Continuous, 400°F for Intermittent

(801) bearings are supplied with 17- 4 PH Stainless Steel Ball. Consult Rexnord Engineering for other available materials

(821) Replaceable composite ball with metallic loader slot outer race

2-Bolt Flange Mounting

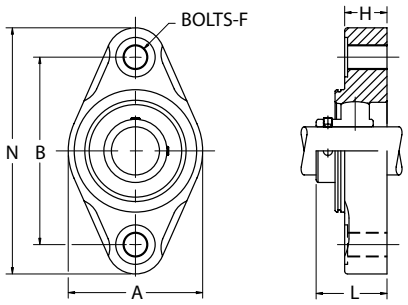

Part Number	Shaft Diameter	A	B	F Bolts	H	L Shaft Protector Length	N
DKLFXM012SP	3/4	2 7/16	3.543	3/8	51/64	1.44	4 9/16
DKLFXM013SP	13/16	2 13/16	3.898		7/8	1.5	5 1/8
DKLFXM014SP	7/8	2 13/16	3.898		7/8	1.5	5 1/8
DKLFXM015SP	15/16	2 13/16	3.898		7/8	1.5	5 1/8
DKLFXM016SP	1	2 13/16	3.898		7/8	1.5	5 1/8
DKLFXM017SP	1 1/16	3 11/32	4.606		1 1/64	1.82	5 53/64
DKLFXM018SP	1 1/8	3 11/32	4.606		1 1/64	1.82	5 53/64
DKLFXM019SP	1 3/16	3 11/32	4.606		1 1/64	1.82	5 53/64
DKLFXM02E20SP	1 1/4S	3 11/32	4.606		1 1/64	1.82	5 53/64
DKLFXM220SP	1 1/4	3 21/32	5.118		1 1/64	1.96	6 3/8
DKLFXM221SP	1 5/16	3 21/32	5.118		1 1/64	1.96	6 3/8
DKLFXM222SP	1 3/8	3 21/32	5.118		1 1/64	1.96	6 3/8
DKLFXM223SP	1 7/16	3 21/32	5.118		1 1/64	1.96	6 3/8
DKLFXM224SP	1 1/2	4 1/64	5.672		1 3/16	2.03	6 59/64

4-Bolt Flange Mounting

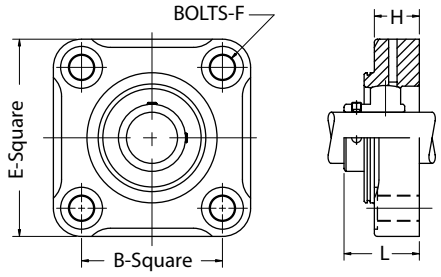

Part Number	Shaft Diameter	B	E	F Bolts	H	L Shaft Protector Length
DKLFM013SP	13/16	2.756	3 55/64	3/8	7/8	1.5
DKLFM014SP	7/8	2.756	3 55/64		7/8	1.5
DKLFM015SP	15/16	2.756	3 55/64		7/8	1.5
DKLFM016SP	1	2.756	3 55/64		7/8	1.5
DKLFM017SP	1 1/16	3.268	4 21/64		1 1/64	1.82
DKLFM018SP	1 1/8	3.268	4 21/64		1 1/64	1.82
DKLFM019SP	1 3/16	3.268	4 21/64		1 1/64	1.82
DKLFM02E20SP	1 1/4S	3.268	4 21/64		1 1/64	1.82
DKLFM220SP	1 1/4	3.622	4 23/32		1 1/64	1.96
DKLFM221SP	1 5/16	3.622	4 23/32		1 1/64	1.96
DKLFM222SP	1 3/8	3.622	4 23/32		1 1/64	1.96
DKLFM223SP	1 7/16	3.622	4 23/32		1 1/64	1.96
DKLFM224SP	1 1/2	4.016	5 5/32		1 3/16	2.03

Pillow Block

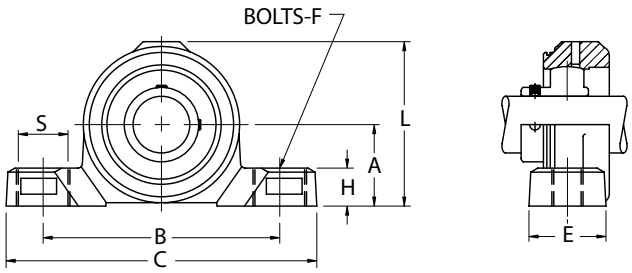

Part Number	Shaft Diameter	A	B	C	E	F Bolts	H	J	L	L Shaft Protector Length	S
DKLPM012SP	3/4	1 5/16	3 25/32	5 1/32	1 3/16	3/8	43/64	3/4	3 1/32	1.44	7/8
DKLPM013SP	13/16	1 7/16	4 11/16	5 31/64	1 23/64		43/64	13/16	3 11/32	1.5	7/8
DKLPM014SP	7/8	1 7/16	4 11/16	5 31/64	1 23/64		43/64	13/16	3 11/32	1.5	7/8
DKLPM015SP	15/16	1 7/16	4 11/16	5 31/64	1 23/64		43/64	13/16	3 11/32	1.5	7/8
DKLPM016SP	1	1 7/16	4 11/16	5 31/64	1 23/64		43/64	13/16	3 11/32	1.5	7/8
DKLPM017SP	1 1/16	1 11/16	4 49/64	6 27/64	1 27/64		25/32	61/64	3 55/64	1.82	15/16
DKLPM018SP	1 1/8	1 11/16	4 49/64	6 27/64	1 27/64		25/32	61/64	3 55/64	1.82	15/16
DKLPM019SP	1 3/16	1 11/16	4 49/64	6 27/64	1 27/64		25/32	61/64	3 55/64	1.82	15/16
DKLPM02E20SP	1 1/4S	1 11/16	4 49/64	6 27/64	1 27/64		25/32	61/64	3 55/64	1.82	15/16
DKLPM220SP	1 1/4	1 7/8	4 31/32	6 37/64	1 33/64		25/32	1 7/16	4 1/4	1.96	15/16
DKLPM221SP	1 5/16	1 7/8	4 31/32	6 37/64	1 33/64		25/32	1 7/16	4 1/4	1.96	15/16
DKLPM222SP	1 3/8	1 7/8	4 31/32	6 37/64	1 33/64		25/32	1 7/16	4 1/4	1.96	15/16
DKLPM223SP	1 7/16	1 7/8	4 31/32	6 37/64	1 33/64		25/32	1 7/16	4 1/4	1.96	15/16
DKLPM224SP	1 1/2	2	5 11/32	7 9/32	1 33/64		25/32	1 13/64	4 13/32	2.03	15/16

3 Bolt Flange Bracket

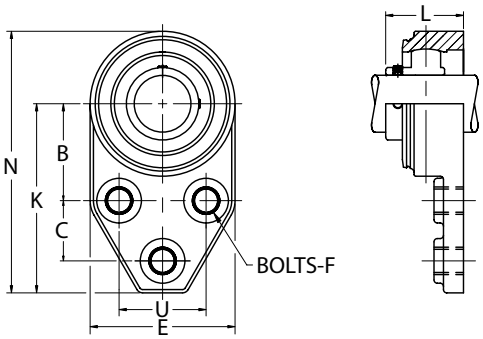

Part Number	Shaft Diameter	B	C	D	E	F Bolts	K	L Shaft Protector Length	N	U
DKLFBM013SP	13/16	1 13/16	1 1/8	1 11/64	2 23/32	3/8	3 17/32	1.5	4 57/64	1 5/8
DKLFBM014SP	7/8	1 13/16	1 1/8	1 11/64	2 23/32		3 17/32	1.5	4 57/64	1 5/8
DKLFBM015SP	15/16	1 13/16	1 1/8	1 11/64	2 23/32		3 17/32	1.5	4 57/64	1 5/8
DKLFBM016SP	1	1 13/16	1 1/8	1 11/64	2 23/32		3 17/32	1.5	4 57/64	1 5/8
DKLFBM017SP	1 1/16	2 1/16	1 1/4	1 11/32	3 13/64		3 55/64	1.82	5 15/32	1 7/8
DKLFBM018SP	1 1/8	2 1/16	1 1/4	1 11/32	3 13/64		3 55/64	1.82	5 15/32	1 7/8
DKLFBM019SP	1 3/16	2 1/16	1 1/4	1 11/32	3 13/64		3 55/64	1.82	5 15/32	1 7/8
DKLFBM02E20SP	1 1/4S	2 1/16	1 1/4	1 11/32	3 13/64		3 55/64	1.82	5 15/32	1 7/8
DKLFBM220SP	1 1/4	2 3/8	1 1/4	1 9/16	3 11/16	7/16	4 15/64	1.96	6 5/64	2
DKLFBM221SP	1 5/16	2 3/8	1 1/4	1 9/16	3 11/16		4 15/64	1.96	6 5/64	2
DKLFBM222SP	1 3/8	2 3/8	1 1/4	1 9/16	3 11/16		4 15/64	1.96	6 5/64	2
DKLFBM223SP	1 7/16	2 3/8	1 1/4	1 9/16	3 11/16		4 15/64	1.96	6 5/64	2

Sleeve Bearings
Rigid: Link-Belt

Contents

	Page
Features and Benefits	532
Nomenclature	533
Engineering	534
Dimensions	
Pillow Block	539
Flange Blocks	545
Take-up Assemblies	546
Replacement Parts	547

Industries Served

Wastewater Management
Industrial Furnace Applications
Dams
Highway Infrastructure
Forest Products
Air Handling

Rigid Sleeve Bearing Units and Take-ups

Rigid sleeve bearing units provide compact and reliable usage in applications where continuous operation and uninterrupted service are required. Because the bearing material wears gradually, sudden breakdowns and costly maintenance are minimized. Sleeve bearings can also operate extremely quietly. The standard bearing materials of babbitt, bronze and cast iron will handle a wide variety of applications such as on log decks, sewage treatment equipment, furnaces and ovens, quiet operating fans and blowers, power plant dampers and stokers, oscillating shaft applications and other general conveying and power transmission machinery. Babbitt bearings are used for moderate speeds and loads and ambient temperatures up to 130°F *(54°C)*. Babbitt has the ability to give excellent service with a minimum of maintenance.

Bronze bearings are recommended for heavier loads, impact, and temperatures beyond the limits of babbitt bearings. They can be operated at ambient temperatures up to 300°F *(149°C)* providing satisfactory lubrication is available. Bronze has excellent all-around bearing characteristics; it has a relatively low coefficient of friction and a remarkable resistance to shock and wear.

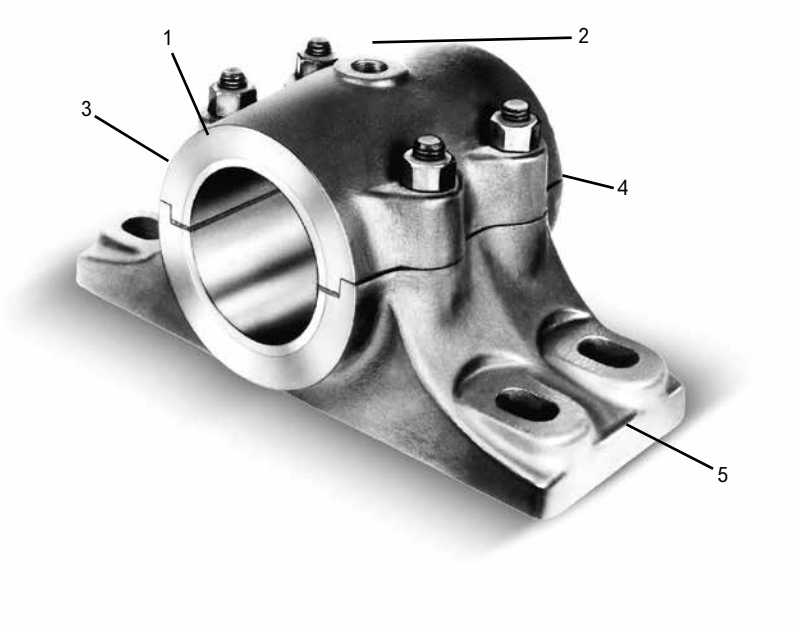

1. Secure Mounting

Bearing of babbitt or bronze is securely anchored in housing.

2. Lubrication

Housing is drilled and tapped for grease cup or lubrication fitting; grooves distribute lubricant over loaded area.

3. Finished Ends

Finished ends permit flush mounting of pulley, sprocket, or collar against bearing when required.

4. Two-piece Pillow Block

Two-piece pillow block has shims to provide for adjustment and compensate for wear.

5. Finished Mounting Surface

Mounting surface is finished to provide firm seating on flat support.

One-piece Pillow Blocks

One-piece pillow blocks are recommended for general applications where it is unnecessary to remove a bearing cap. They are available with babbitt, bronze or plain bore cast iron bearings.

Two-piece Pillow Blocks

Two-piece pillow blocks are used whenever a bearing with a removable cap is required. They are available with babbitt or bronze bearings.

For heavy side pressures or angular loading, housings with gibbed joints provide greater strength. Cast steel housings are used where sudden shocks or heavy impact loads are encountered.

Flanged Units

Flanged units with square flanges have slotted mounting holes to make them interchangeable with most common ball and roller bearing bolting patterns. These units have either babbitt or bronze bearings.

Nomenclature

2K 15 95 F Z–

Symbol	Description
None	One-piece housing, cast iron
2—	Two-piece housing, cast iron
2K	Two-piece housing, cast steel
10	Pillow block, one-piece, 2-bolt base
11	Pillow block, plain iron (no sleeve)
12	Pillow block, angle type split joint, 2-bolt base
13	Pillow block, angle type split joint, 4-bolt base
14	Pillow block, horizontal gibbed joint, 4-bolt base
15	Pillow block, angle type split joint, 40° off horizontal
F22	Flanged unit, square, 4-bolt
DS28	Take-up, conveyor, heavy rigid frame
DSB28	Take-up, conveyor, heavy hinged frame
95	Shaft diameter in 16ths of an inch
F	4-bolt base (units 1000, 1100 only)
None	Babbitt bearing (except units 1100)
Z	Bronze bearing
XX	Take-up adjustment, inches

Rigid Sleeve Bearing Units Selection Guide

To select a rigid sleeve bearing, determine the applied radial load and the applicable operating conditions. The procedure shown here will aid in selecting an appropriate bearing.

The selection procedures and rating formulas used here are in agreement with industry standards for sleeve bearings established by the Mechanical Power Transmission Association. The bearing ratings apply when certain installation and operating conditions are met and when any other adverse ambient conditions such as high or low temperatures, extreme dirt or moisture, chemical contamination, shock or vibration loading direct or induced, oscillating shafts, intermittent operation and related factors are carefully considered.

The ratings used apply when the following conditions are met:

1. Align bearings with the shaft to provide uniform load distribution.
2. Normal running loads should not exceed the ratings shown in the tables. Starting and occasional peak loads should not exceed these ratings by more than 100%.
3. The direction of the load should not be within 30° (.53 radians) of either side of the grease groove and must further meet any load direction limitations imposed by Table 1.
4. The shaft finish through the bearing bore should be at least as smooth as that of normal commercial cold finished steel shafting (about 32 micro-inches or *.82 µm*). There should also be no machined or ground spiral lead on the shaft journal. Shafting should be within the diameter tolerances listed on the next page.
5. Ambient temperatures should not exceed 130°F *(54°C)* for babbitt and 300°F *(149°C)* for bronze bearings. This temperature limit applies to shafts extending from ovens, high temperature fans, etc.
6. Sturdy, vibration-free supporting structures must be provided, along with adequate grease lubrication.

Steps for Selection

Step 1

From Table 1, select the bearing material and housing series and material suitable for the radial load direction.

Step 2

Refer to the radial load rating tables in the Load Ratings and Speed Limits section to determine the shaft diameter necessary to obtain the required radial rating at the given speed.

If the conditions described above cannot be met, the load should be increased by a service factor prior to selecting the bearing sizes from the tables shown in the Load Ratings and Speed Limits section. The service factor may be as high as 2.0 for conditions to the left of the "stair-step" line, or as high as 3.0 for conditions to the right of the line. Consult Rexnord Bearing Division.

Step 3

To position a shaft axially or where light thrust loads are present, provide thick bronze washers backed by a shaft collar or a machined shaft shoulder against the end of the bearing. The bearing ends are already machined.

Table 1 – Bearing material and unit type selection

Material		Recommended Loading Range, Degrees, Radius For Pillow Block Or Flanged Unit*		Available Shaft Sizes, inches	Rigid unit series		
					Pillow Block		Flanged Unit
Bearing	Housing				2-bolt	4-bolt	Square
Babbitt	Cast iron one-piece	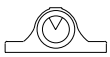	300° **5.2 rad**	1/2 - 2 15/16	1000		
				3/4 - 3 15/16			F2200
				3 7/16 - 3 15/16		1000F	
	Cast iron two-piece	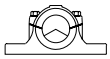	120° **2.1 rad**	7/8 - 3 15/16	2-1200		
				3 7/16 - 4 15/16		2-1300	
			300° **5.2 rad**	1 15/16 - 8		2-1400	
		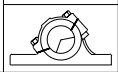	120° **2.1 rad**	1 15/16 - 9		2-1500	
Bronze	Cast iron one-piece	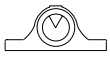	300° **5.2 rad**	1/2 - 2 15/16	1000Z		
				3/4 - 3 15/16			F2200Z
				3 7/16 - 3 15/16		1000FZ	
	Cast iron two-piece		120° **2.1 rad**	7/8 - 3 15/16	2-1200Z		
			300° **5.2 rad**	1 15/16 - 8		2-1400Z	
		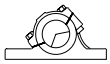	☐ 120° **2.1 rad**	1 15/16 - 8		2-1500Z	
	Cast steel two-piece	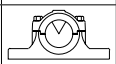	300° **5.2 rad**	1 15/16 - 12		2K1400Z	

* Shaded portion of drawings represents recommended loading range with the grease groove horizontal and opposite the loaded area. For other positioning, consult Rexnord Bearing Division.

☐ 300°(5.2 rad.) for housings with gibbed joint construction.

Additional Information

Sleeve Bearing Materials:

Plain bearings made of babbitt are universally accepted as providing reasonable capacity and dependable service, often under adverse conditions. Babbitt is a relatively soft bearing material and for this reason minimizes danger of scoring or damage to shafts or rotors. It can often be repaired quickly on the spot by rescraping, pouring of new metal, etc. Bearing operating temperature should not exceed 130°F *(54°C)* although occasional peaks to 200°F *(93°C)* may be tolerated. Babbitt bearings are usually restricted to applications involving light to moderate loads and mild shock.

Bronze bearings are suitable for heavier loads than babbitt (75% to 200% higher), depending upon specific conditions of load and speed. Bronze withstands higher shock loads and permits somewhat higher speed operation. It is usually restricted to 300°F *(150°C)* ambient temperature, although normal multi-purpose greases are limited to 200°-250°F *(93°-121°C)* operating temperature. Bronze is a harder material than babbitt and has a greater tendency to score or damage shafts in the event of malfunction such as lack of relubrication. Field repair of bronze bearings generally requires removing shims and scraping or replacement of bushings.

Cast iron bearings (series 1100) are low in cost and suitable for many slow moving shafts and oscillating or reciprocating arms supporting relatively light loads. The lubricating characteristics of cast iron are attributed to the free graphite flakes present in the material. With the use of cast iron bearings, higher shaft clearance is usually utilized. Thus any large wear particles or debris will not join or seize the bearing. This material has been used to temperatures as high as 1000°F *(538°C)* under light loads and slow speed intermittent operations, where ordinary lubricants are ineffective.

Additional Features:

By the very nature of their design, all rigid sleeve bearing units are expansion type, in that the shaft journal is free to slide axially through the bore of the bearing. To fix a unit, a combination of shaft shoulders and/or thrust collars with bronze washers can be utilized. Rigid sleeve bearing units have cored mounting bolt holes suitable for the inch or metric bolts listed.

Bearings can be replaced in units with bronze sleeves. Care should be taken when replacing bronze sleeves, split or solid, to firmly anchor the sleeve to the housing.

Operation:

Rigid sleeve bearing units are not prelubricated. The service instructions packed with shipments provide guide lines for initial lubrication and relubrication intervals. As lack of lubrication results in bearing and shaft wear, care must be taken to assure an adequate supply of correct lubricant, especially during initial start-up and until satisfactory relubrication intervals are determined. Very careful shaft alignment is necessary during installation. Shaft journals must turn freely without binding in the bearing or excessive heat and seizure can result. Any factor which may disrupt or remove the lubricant film should be eliminated as well. Sharp edges on the shaft or the bearing surface can act as scrapers to destroy lubricant films. Do not extend shaft keyways into bearing bores. When rigid sleeve bearings must carry light to medium thrust loads, thrust washers of bronze should be placed against the already machined face of the bearing and backed by substantial thrust collars, shaft shoulders, machined gear, sprocket or sheave faces, etc.

Take-ups:

Rigid sleeve bearing pillow blocks can be mounted on the universal take-up frame LC, and LHD universal take-up frame. Alignment of rigid sleeve bearing take-ups is difficult and must be carefully accomplished. Alignment must also be maintained during any further adjustment of the take-up after operation. Bolt take-up frames firmly to good supporting structure to prevent frame overload and distortion.

Shaft Tolerances:

Shaft diameters for rigid sleeve bearing units are usually held to the following regular commercial tolerances:

Shaft Diameters	Recommended Tolerance
through 2"	Nominal to –.003"
2 1/16" through 4"	Nominal to –.004"
4 1/16" through 6"	Nominal to –.005"
6 1/16" through 13"	Nominal to –.006"

Warning:

The reliability built in all Rexnord bearings can be realized in service only when bearings are correctly selected, properly installed, protected and maintained.

The correct selection of rigid sleeve bearing mounted units requires that the magnitude and nature of all loads, speeds, alignment, mounting, operating requirements and maintenance be adequately considered. The selection of materials for and design of housings, shafting, fasteners, and accessories as well as provisions for installation and maintenance must follow good engineering principles.

Housings must be selected and installed with regard to the degree and direction of the forces that will occur. Housings should not be used under tension loads except with adequate safety factors. For this reason pillow blocks are best suited to withstand radial loads passing through the base. When heavy loads or shock loads are possible, it is most important to mount a unit so that the line of force passes directly into the base, or so that the unit is directly and substantially supported other than through its mounting bolts.

Where the line of force falls outside the base, serious housing and fastener deflection or failure may occur.

Take-ups are best located where loads are moderate and no shock loads are present. As many mounting arrangements are possible with take-ups, proper safety factors must always be considered on all items of the system, including shafts, housings, fasteners, and adjusting screws. Rexnord Bearing Division, should be consulted where unusual loading conditions exist.

Load Ratings – Babbitt Rigid Sleeve Bearing Units

Radial Load Ratings for 10 to 300 RPM (pounds/*newtons*) * ■

Shaft Diameter, inches	Shaft Speed, RPM													
	10		50		100		150		200		250		300	
1/2	100	*445*	100	*445*	100	**445**	95	*423*	95	*423*	95	*423*	95	*423*
5/8	150	*667*	150	*667*	145	**645**	145	*645*	140	*623*	140	*673*	135	*600*
3/4	180	*801*	175	*778*	175	**778**	170	*756*	170	*756*	165	*734*	160	*712*
7/8	260	*1157*	255	*1134*	250	**1112**	245	*1090*	240	*1068*	235	*1045*	230	*1023*
15/16	280	*1246*	275	*1223*	265	**1179**	260	*1157*	255	*1134*	250	*1112*	245	*1090*
1	295	*1312*	290	*1290*	285	**1268**	280	*1246*	270	*1201*	265	*1179*	260	*1157*
1 1/8	415	*1846*	410	*1824*	400	**1779**	390	*1735*	380	*1690*	370	*1646*	355	*1579*
1 3/16, 1 1/4	440	*1957*	430	*1913*	420	**1868**	410	*1824*	395	*1757*	385	*1713*	375	*1668*
1 5/16, 1 3/8,	585	*2602*	570	*2535*	555	**2469**	535	*2380*	520	*2313*	505	*2246*	485	*2157*
1 7/16, 1 1/2	640	*2847*	625	*2780*	605	**2691**	585	*2602*	565	*2513*	545	*2424*	525	*2335*
1 11/16, 1 3/4	875	*3892*	850	*3781*	820	**3648**	785	*3492*	755	*3358*	720	*3203*	690	*3069*
1 15/16, 2	1150	*5120*	1110	*4940*	1060	**4720**	1010	*4490*	965	*4292*	915	*4070*	865	*3848*
2 3/16, 2 1/4	1460	*6490*	1400	*6230*	1330	**5920**	1260	*5600*	1190	*5290*	1120	*4980*	1050	*4670*
2 7/16, 2 1/2	1800	*8010*	1730	*7690*	1630	**7250**	1530	*6810*	1430	*6360*	1340	*5960*	1240	*5520*
2 11/16, 2 3/4	2190	*9740*	2080	*9250*	1950	**8670**	1820	*8100*	1690	*7520*	1560	*6940*	1150	*5120*
2 15/16, 3	2600	*11570*	2470	*10990*	2300	**10230**	2130	*9470*	1960	*8720*	1790	*7960*	675	*3002*
3 7/16, 3 1/2	3550	*15790*	3330	*14810*	3060	**13610**	2790	*12410*	2520	*11210*	1200	*5340*		
3 15/16, 4	4640	*20640*	4310	*19170*	3910	**17390**	3500	*15570*	2760	*12280*				
4 7/8, 4 1/2	5870	*26110*	5410	*24060*	4830	**21480**	4250	*18900*	1410	*6270*				
4 15/16, 5	7240	*32210*	6600	*29360*	5810	**25840**	5010	*22290*						
5 7/16, 5 1/2	8750	*38920*	7900	*35140*	6840	**43030**	4360	*19390*						
5 15/16, 6	10410	*46310*	9300	*41370*	7910	**35190**	2390	*10630*						
6 7/16, 6 1/2	12200	*54270*	10790	*48000*	9020	**40120**								
6 15/16, 7	14120	*62810*	12360	*54980*	10150	**45150**								
7 7/16, 7 1/2	17270	*76820*	14950	*66500*	12050	**53600**								
7 15/16, 8	18390	*81800*	15750	*70060*	10710	**47640**								
9	20750	*92300*	17360	*77220*	4140	**18420**								
10	22950	*102090*	18760	*83450*										
12	30700	*136560*	23910	*106360*										

For speeds lower than 10 RPM consult Rexnord Bearing Division.

Radial Load Rating for 350 to 1000 RPM (pounds/*newtons*) *

Shaft Diameter, inches	Shaft Speed, RPM																	
	350		400		450		500		600		700		800		900		1000	
1/2	95	*423*	90	*400*	90	*400*	90	*400*	85	*378*	85	*378*	85	*378*	80	*356*	80	*356*
5/8	135	*600*	135	*600*	130	*587*	130	*587*	125	*556*	120	*534*	115	*512*	110	*489*	110	*489*
3/4	160	*712*	155	*689*	155	*689*	150	*667*	145	*645*	140	*623*	130	*578*	125	*556*	120	*534*
7/8	225	*1001*	220	*979*	215	*956*	210	*934*	200	*890*	190	*845*	180	*801*	150	*667*		
15/16	240	*1068*	235	*1045*	225	*1001*	220	*979*	210	*934*	200	*890*	185	*823*	105	*467*		
1	250	*1112*	245	*1090*	240	*1068*	230	*1023*	220	*979*	205	*912*						
1 1/8	345	*1535*	335	*1490*	325	*1446*	315	*1401*	295	*1312*	245	*1090*						
1 3/16, 1 1/4	360	*1601*	350	*1557*	340	*1512*	325	*1446*	305	*1357*	190	*845*						
1 5/16, 1 3/8,	470	*2091*	455	*2024*	435	*1935*	420	*1868*	345	*1535*								
1 7/16, 1 1/2	500	*2224*	480	*2135*	460	*2046*	440	*1957*	205	*912*								
1 11/16, 1 3/4	655	*2914*	625	*2780*	590	*2624*	340	*1512*										
1 15/16, 2	815	*3625*	730	*3247*	335	*1490*												
2 3/16, 2 1/4	975	*4337*	410	*1824*														
2 7/16, 2 1/2	645	*2869*																

■ Load ratings are based on industry standards established by the Mechanical Power Transmission Association.

* For plain bore Cast Iron Sleeve Bearing Units use radial load ratings at speeds to the left of the shaded area.

Load Ratings – Bronze Rigid Sleeve Bearing Units

Radial Load Rating for 10 to 300 RPM (pounds/*newtons*) ■

Shaft Diameter, inches	Shaft Speed, RPM													
	10		50		100		150		200		250		300	
1/2	200	*890*	200	*890*	200	*890*	195	*867*	195	*867*	195	*867*	195	*867*
5/8	250	*1112*	250	*1112*	245	*1090*	245	*1090*	240	*1090*	240	*1068*	240	*1068*
3/4	300	*1334*	300	*1334*	295	*1312*	295	*1312*	290	*1290*	285	*1268*	285	*1268*
7/8	435	*1935*	430	*1913*	425	*1890*	420	*1868*	415	*1846*	410	*1824*	405	*1802*
15/16	465	*2068*	460	*2046*	455	*2024*	450	*2002*	445	*1979*	435	*1935*	430	*1913*
1	495	*2202*	490	*2180*	485	*2157*	480	*2135*	470	*2091*	465	*2068*	460	*2046*
1 1/8	700	*3114*	690	*3069*	680	*3025*	670	*2980*	660	*2936*	650	*2891*	640	*2847*
1 3/16, 1 1/4	735	*3269*	730	*3247*	715	*3180*	705	*3136*	695	*3092*	680	*3025*	670	*2980*
1 5/16, 1 3/8,	980	*4359*	965	*4293*	950	*4226*	930	*4137*	915	*4070*	895	*3981*	880	*3914*
1 7/16, 1 1/2	1070	*4760*	1050	*4670*	1030	*4580*	1010	*4490*	995	*4426*	975	*4337*	955	*4248*
1 11/16, 1 3/4	1470	*6540*	1440	*6410*	1410	*6270*	1370	*6090*	1340	*5960*	1310	*5830*	1280	*5690*
1 15/16, 2	1920	*8540*	1880	*8360*	1830	*8140*	1790	*7960*	1740	*7740*	1690	*7520*	1640	*7300*
2 3/16, 2 1/4	2440	*10850*	2390	*10630*	2320	*10320*	2240	*9960*	2170	*9650*	2100	*9340*	2030	*9030*
2 7/16, 2 1/2	3020	*13430*	2940	*13080*	2850	*12680*	2750	*12230*	2650	*11790*	2560	*11390*	2460	*10940*
2 11/16, 2 3/4	3660	*16280*	3560	*15840*	3430	*15260*	3300	*14680*	3170	*14100*	3040	*13520*	2620	*11650*
2 15/16, 3	4370	*19440*	4230	*18820*	4060	*18060*	3890	*17300*	3720	*16550*	3550	*15790*	2440	*10850*
3 7/16, 3 1/2	5960	*26510*	5740	*25530*	5470	*24330*	5200	*23130*	4930	*21930*	3610	*16060*	1440	*6410*
3 15/16, 4	7790	*34650*	7460	*33180*	7060	*31400*	6650	*29580*	5910	*26290*				
4 7/8, 4 1/2	9860	*43860*	9400	*41810*	8820	*39230*	8240	*36650*	5400	*24020*				
4 15/16, 5	12180	*54180*	11540	*51330*	10740	*47770*	9950	*44260*	4090	*18190*				
5 7/16, 5 1/2	14740	*65570*	13880	*61740*	12820	*57030*	10340	*45990*	1820	*8100*				
5 15/16, 6	17530	*77980*	16420	*73040*	15040	*66900*	9520	*42350*						
6 7/16, 6 1/2	20560	*91460*	19150	*85180*	17390	*77350*	7900	*35140*						
6 15/16, 7	23840	*106050*	22070	*98170*	19870	*88390*	5350	*23800*						
7 7/16, 7 1/2	29170	*129750*	26850	*119430*	23950	*106530*	1880	*8360*						
7 15/16, 8	31090	*138300*	28450	*126550*	23410	*104130*								
9	35150	*156360*	31760	*141280*	18540	*82470*								
10	38950	*172260*	34760	*154620*	12220	*54360*								
12	52300	*232640*	45520	*202480*										

For speeds lower than 10 RPM consult Rexnord Bearing Division.

Radial Load Rating for 350 to 1000 RPM (pounds/*newtons*)

Shaft Diameter, inches	Shaft Speed, RPM																	
	350		400		450		500		600		700		800		900		1000	
1/2	195	*867*	190	*845*	190	*845*	190	*845*	185	*823*	185	*823*	185	*823*	180	*800*	180	*800*
5/8	235	*1045*	235	*1045*	235	*1045*	230	*1023*	225	*1001*	220	*979*	220	*979*	215	*956*	210	*934*
3/4	280	*1246*	280	*1246*	275	*1223*	270	*1201*	265	*1179*	260	*1157*	255	*1134*	250	*1112*	240	*1068*
7/8	400	*1779*	395	*1757*	390	*1735*	385	*1713*	375	*1668*	365	*1624*	355	*1579*	325	*1446*	245	*1090*
15/16	425	*1890*	420	*1868*	415	*1846*	410	*1824*	395	*1757*	385	*1713*	375	*1668*	295	*1312*	200	*890*
1	450	*2002*	445	*1979*	440	*1957*	430	*1913*	420	*1868*	405	*1802*	360	*1601*	255	*1134*	150	*667*
1 1/8	630	*2802*	620	*2758*	605	*2691*	595	*2647*	575	*2558*	525	*2335*	360	*1601*	195	*867*		
1 3/16, 1 1/4	660	*2936*	645	*2869*	635	*2825*	625	*2780*	600	*2669*	485	*2157*	300	*1334*	115	*512*		
1 5/16, 1 3/8,	865	*3848*	845	*3759*	830	*3692*	815	*3625*	735	*3269*	465	*2068*	195	*867*				
1 7/16, 1 1/2	935	*4159*	915	*4070*	895	*3981*	875	*3892*	635	*2825*	315	*1401*						
1 11/16, 1 3/4	1240	*5520*	1210	*5380*	1180	*5250*	930	*4137*	410	*1824*								
1 15/16, 2	1590	*7070*	1500	*6670*	1110	*4940*	715	*3180*										
2 3/16, 2 1/4	1960	*8720*	1390	*6180*	830	*3692*												
2 7/16, 2 1/2	1860	*8270*	1090	*4850*														
2 11/16, 2 3/4	1580	*7030*	545	*2424*														

■ Load ratings are based on industry standards established by the Mechanical Power Transmission Association.

1000, 1000Z

Photo Shows a 2-Bolt Rigid Sleeve Bearing Pillow Block Unit with Bronze Bushing

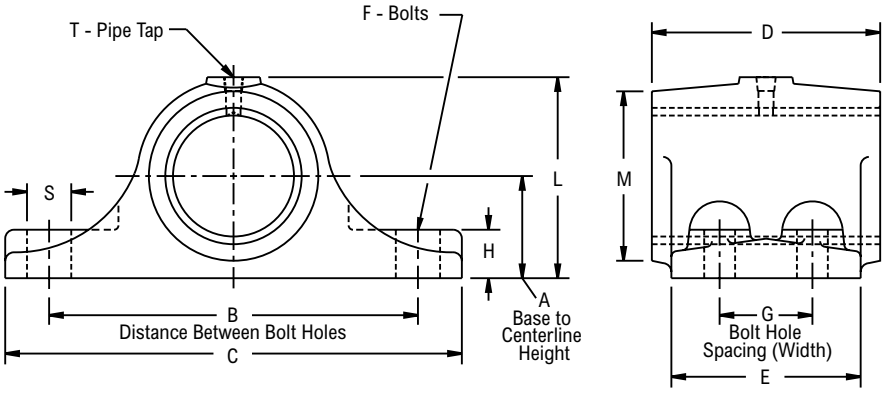

Product Features

- Corrosion-resistant powder coating
- Cast iron one piece housing
- Babbitt or Bronze sleeve
- 2 or 4-bolt base
- Relubricatable
- See Features and Benefits for additional info on page 532.

Bearing Dimensions

Shaft Diameter	Babbitt Part Number	Bronze Part Number	A Base to Centerline Height	B Distance Between Bolt Holes	G Bolt Hole Spacing (Width)	C	D	E	F	H	L	M	S	T	Approx. Weight
2-Bolt															
1/2	1008	1008Z	3/4	2 3/8	-	3 1/4	1 3/8	1	5/16	3/8	1 1/2	1 3/16	1/2	1/8	0.80
5/8	1010	1010Z	7/8	3	-	4 1/4	2	1 3/8	3/8	1/2	1 3/4	1 1/2	5/8	1/8	1.60
3/4	1012	1012Z													1.50
7/8	1014	1014Z	1	3 1/4	-	4 1/2	2	1 3/8	3/8	1/2	1 31/32	1 3/4	5/8	1/8	1.90
15/16	1015	1015Z													1.70
1	1016	1016Z													1.60
1 1/8	1018	1018Z	1 1/4	4	-	5 1/4	2 1/2	1 5/8	3/8	5/8	2 3/8	2	5/8	1/8	2.60
1 3/16	1019	1019Z													2.50
1 1/4	1020	1020Z													2.40
1 3/8	1022	1022Z	1 3/8	5	-	6 3/4	3	2	1/2	3/4	2 11/16	2 3/8	13/16	1/4	4.50
1 7/16	1023	1023Z													4.30
1 1/2	1024	1024Z													4.10
1 11/16	1027	1027Z	1 5/8	5 1/2	-	7 1/4	3 1/2	2 1/4	1/2	3/4	3 3/16	2 3/4	7/8	1/4	6.00
1 3/4	1028	1028Z													5.70
1 15/16	1031	1031Z	1 3/4	6	-	8	4	2 3/4	5/8	7/8	3 1/2	3 1/8	1	1/4	8.50
2	1032	1032Z													8.30
2 3/16	1035	1035Z	2	6 1/2	-	8 1/2	4 1/2	3	5/8	1	3 7/8	3 3/8	1	3/8	11.00
2 7/16	1039	1039Z	2 1/4	7	-	9 1/4	5	3 1/4	3/4	1 1/8	4 3/8	3 3/4	1 1/8	3/8	15.00
2 15/16	1047	1047Z	2 1/2	8 1/2	-	11 1/4	6	4	7/8	1 1/4	5	4 1/2	1 3/8	3/8	26.00
4-Bolt															
3 7/16	1055F	1055FZ	3	10	2 3/4	12 1/2	7	5	3/4	1 3/8	6	5 1/4	1 1/4	1/2	39.00
3 15/16	1063F	1063FZ	3 1/4	11	3	13 3/4	8	5 1/2	3/4	1 1/2	6 9/16	5 7/8	1 3/8	1/2	54.00

Additional Notes

- Please call 1-866-REXNORD for availability
- One pipe tapped hole for lubrication
- Grease cup or fitting not included
- For the Selection Guide, Load Ratings and Speed Limits, see the Link-Belt Sleeve Bearing Engineering section on pages 534 - 537.
- Note: Dimensions subject to change. Certified dimensions of ordered material furnished on request.

1100

Photo Shows a 2-Bolt Rigid Sleeve Bearing Pillow Block Unit with Cast Iron Bushing

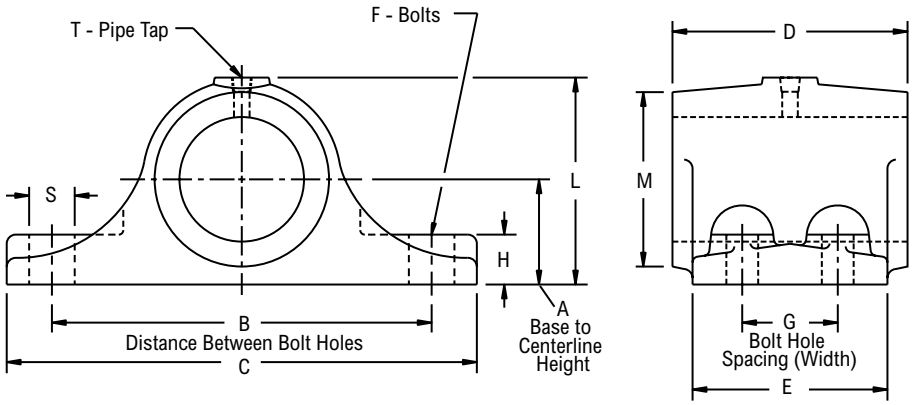

Product Features

- Corrosion-resistant powder coating
- Cast iron one piece housing
- Cast iron sleeve
- 2 or 4-bolt base
- Relubricatable
- See Features and Benefits for additional info on page 532.

Bearing Dimensions

Shaft Diameter	Part Number	A Base to Centerline Height	B Distance Between Bolt Holes	G Bolt Hole Spacing (Width)	C	D	E	F	H	L	M	S	T	Approx. Weight
2-Bolt														
3/4	1112	3/4	2 3/8	-	3 1/4	1 3/8	1	5/16	3/8	1 1/2	1 3/16	1/2	1/8	0.60
7/8	1114	7/8	3	-	4 1/4	2	1 3/8	3/8	1/2	1 3/4	1 1/2	5/8	1/8	1.40
15/16	1115													1.30
1	1116													1.20
1 1/8	1118	1	3 1/4	-	4 1/2	2	1 3/8	3/8	1/2	1 31/32	1 3/4	5/8	1/8	1.60
1 3/16	1119													1.50
1 1/4	1120													1.40
1 7/16	1123	1 1/4	4	-	5 1/4	2 1/2	1 5/8	3/8	5/8	2 3/8	2	5/8	1/8	2.10
1 1/2	1124													2.00
1 11/16	1127	1 3/8	5	-	6 3/4	3	2	1/2	3/4	2 11/16	2 3/8	13/16	1/4	3.50
1 3/4	1128													3.40
1 15/16	1131	1 5/8	5 1/2	-	7 1/4	3 1/2	2 1/4	1/2	3/4	3 3/16	2 3/4	7/8	1/4	5.00
2	1132													4.90
2 3/16	1135	1 3/4	6	-	8	4	2 3/4	5/8	7/8	3 1/2	3 1/8	1	3/8	6.80
2 7/16	1139	2	6 1/2	-	8 1/2	4 1/2	3	5/8	1	3 7/8	3 3/8	1	3/8	9.00
2 11/16	1143	2 1/4	7	-	9 1/4	5	3 1/4	3/4	1 1/8	4 3/8	3 3/4	1 1/8	3/8	12.00
2 15/16	1147													11.00
3 7/16	1155	2 1/2	8 1/2	-	11 1/4	6	4	7/8	1 1/4	5	4 1/2	1 3/8	1/2	19.00
4-Bolt														
3 15/16	1163F	3	10	2 3/4	12 1/2	7	5	3/4	1 3/8	6	5 1/4	1 1/4	1/2	31.00

Additional Notes

- Please call 1-866-REXNORD for availability
- One pipe tapped hole for lubrication
- Grease cup or fitting not included
- Note: Approximate load ratings from babbitt ratings
- For the Selection Guide, Load Ratings and Speed Limits, see the Link-Belt Sleeve Bearing Engineering section on pages 534 - 537.
- Note: Dimensions subject to change. Certified dimensions of ordered material furnished on request.

21200, 21200Z

Photo Shows a 2-Bolt Rigid Sleeve Bearing Two-Piece Pillow Block Unit with Bronze Bushing

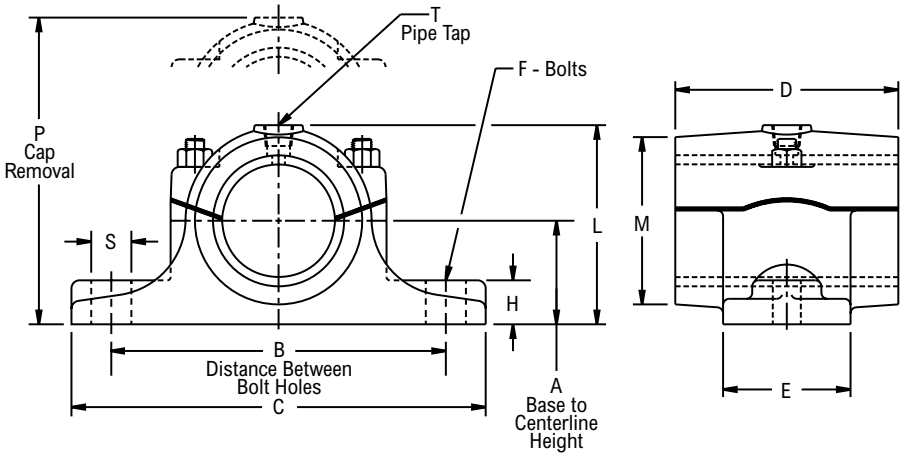

Product Features

- Corrosion-resistant powder coating
- Cast iron two piece housing
- Babbitt or Bronze sleeve
- 2-bolt base
- Relubricatable
- See Features and Benefits for additional info on page 532.

Bearing Dimensions

Shaft Diameter	Babbitt Part Number	Bronze Part Number	A Base to Centerline Height	B Distance Between Bolt Holes	C	D	E	F	H	L	M	P	S	T	Approx. Weight
7/8	21214	21214Z	1	3 5/8	4 3/4	2	1 3/8	3/8	9/16	2 1/16	1 13/16	3	9/16	1/8	1.90
15/16	21215	21215Z													1.80
1	21216	21216Z													1.70
1 1/16	21217	21217Z	1 1/4	4 1/8	5 1/4	2 1/2	1 5/8	3/8	5/8	2 7/16	2	3 1/2	5/8	1/8	2.60
1 1/8	21218	21218Z													2.50
1 3/16	21219	21219Z													2.40
1 1/4	21220	21220Z													2.30
1 5/16	21221	21221Z	1 3/8	4 7/8	6 1/4	3	2	1/2	3/4	2 11/16	2 5/16	3 7/8	11/16	1/4	4.10
1 3/8	21222	21222Z													4.00
1 7/16	21223	21223Z													
1 1/2	21224	21224Z													3.80
1 9/16	21225	21225Z	1 1/2	5 1/4	6 3/4	3 1/2	2 1/4	1/2	13/16	3	2 11/16	4 3/8	3/4	1/4	6.80
1 5/8	21226	21226Z													6.40
1 11/16	21227	21227Z													6.00
1 3/4	21228	21228Z													5.60
1 15/16	21231	21231Z	1 3/4	6	7 1/2	4	2 1/2	5/8	15/16	3 7/16	3	4 7/8	13/16	1/4	8.50
2	21232	21232Z													8.00
2 3/16	21235	21235Z	1 7/8	6 1/2	8 1/2	4 1/2	2 3/4	5/8	1	3 3/4	3 3/8	5 1/4	1	3/8	11.00
2 1/4	21236	21236Z													
2 7/16	21239	21239Z	2 1/8	7	8 7/8	5	3	5/8	1 1/8	4 3/16	3 3/4	5 3/4	1	3/8	14.00
2 1/2	21240	21240Z													13.00
2 11/16	21243	21243Z	2 1/4	7 3/4	10	5 1/2	3 1/4	3/4	1 3/16	4 1/2	4	6 3/8	1 1/8	3/8	19.00
2 15/16	21247	21247Z	2 1/2	8 1/2	10 3/4	6	3 1/2	3/4	1 5/16	4 7/8	4 1/4	6 3/4	1 1/8	3/8	23.00
3	21248	21248Z													22.00
3 7/16	21255	21255Z	2 7/8	9 1/4	12	7	4	7/8	1 1/2	5 5/8	5	7 5/8	1 3/8	1/2	35.00
3 15/16	21263	21263Z	3 1/8	10 1/2	13 1/2	8	4 1/2	1	1 5/8	6 3/16	5 5/8	8 1/2	1 1/2	1/2	48.00

Additional Notes

- Please call 1-866-REXNORD for availability
- One pipe tapped hole for lubrication
- Grease cup or fitting not included
- LHD sliding base take-up can be drilled for these pillow blocks
- For the Selection Guide, Load Ratings and Speed Limits, see the Link-Belt Sleeve Bearing Engineering section on pages 534 - 537.
- Note: Dimensions subject to change. Certified dimensions of ordered material furnished on request.

21300

Photo Shows a 4-Bolt Rigid Sleeve Bearing Two-Piece Pillow Block Unit with Babbitt Bushing

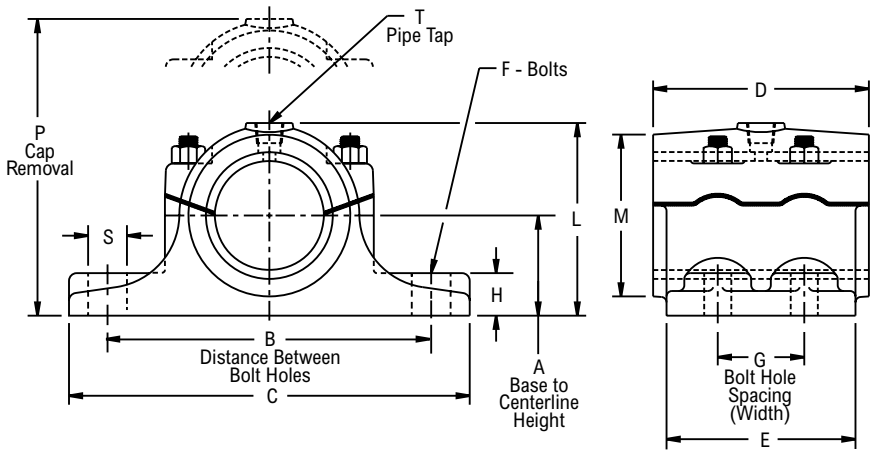

Product Features

- Corrosion-resistant powder coating
- Cast iron two piece housing
- Babbitt sleeve
- 4-bolt base
- Relubricatable
- See Features and Benefits for additional info on page 532.

Bearing Dimensions

Shaft Diameter	Part Number	A Base to Centerline Height	B Distance Between Bolt Holes	G Bolt Hole Spacing (Width)	C	D	E	F	H	L	M	P	S	T	Approx. Weight
							4-Bolt								
3 7/16	21355	3 1/4	10 1/2	2 3/4	13	7	5	3/4	1 3/8	6 1/4	5 1/4	8 1/8	1 1/4	1/2	43.00
3 15/16	21363	3 1/2	12	3	14 3/4	8	5 1/2	3/4	1 1/2	6 13/16	5 7/8	9 3/8	1 3/8	1/2	61.00
4 7/16	21371	4 1/8	13 1/2	3 1/2	16 1/2	9	6 1/4	7/8	1 3/4	7 7/8	6 5/8	10 3/8	1 1/2	1/2	92.00
4 15/16	21379	4 1/2	15	4	18	10	7	7/8	1 7/8	8 9/16	7 1/4	11 3/8	1 5/8	1/2	116.00

Additional Notes

- Please call 1-866-REXNORD for availability
- One pipe tapped hole for lubrication
- Grease cup or fitting not included
- For the Selection Guide, Load Ratings and Speed Limits, see the Link-Belt Sleeve Bearing Engineering section on pages 534 - 537.
- Note: Dimensions subject to change. Certified dimensions of ordered material furnished on request.

21400, 21400Z, 2K1400Z

Photo Shows a 4-Bolt Rigid Sleeve Bearing Two-Piece Pillow Block Unit with Bronze Bushing

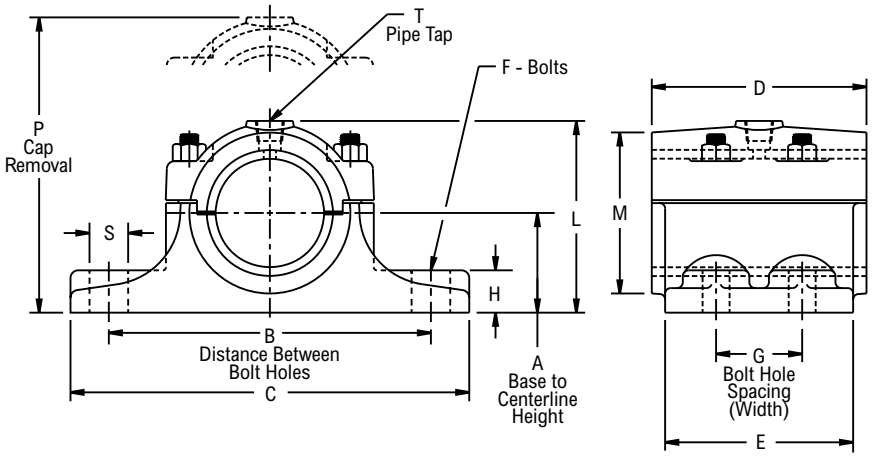

Product Features

- Corrosion-resistant powder coating
- Cast iron or cast steel housing
- Two-piece gibbed joint design
- Babbitt or Bronze sleeve
- 4-bolt base
- Relubricatable
- See Features and Benefits for additional info on page 532.

Bearing Dimensions

Shaft Diameter	Babbitt Part Number	Bronze Part Number	A Base to Centerline Height	B Distance Between Bolt Holes	G Bolt Hole Spacing (Width)	C	D	E	F	H	L	M	P	S	T	Approx. Weight
Cast Iron																
1 15/16	21431	21431Z	1 3/4	6 1/2	1 3/4	8 1/4	4	3 1/2	1/2	7/8	3 7/16	3	4 1/2	3/4	1/4	10.00
2 3/16	21435	21435Z	1 7/8	6 3/4	1 3/4	8 1/2	4 1/2	3 1/2	1/2	1	3 3/4	3 3/8	4 15/16	3/4	3/8	14.00
2 7/16	21439	21439Z	2 1/8	8	2	10 1/4	5	4	5/8	1 1/8	4 3/16	3 3/4	5 3/8	1	3/8	19.00
2 11/16	21443	21443Z	2 1/4	8 1/4	2 1/4	10 1/2	5 1/2	4 1/4	5/8	1 1/4	4 1/2	4	6	1	3/8	25.00
2 15/16	21447	21447Z	2 1/2	8 3/4	2 1/2	11	6	4 1/2	5/8	1 3/8	4 7/8	4 1/4	6 7/8	1	3/8	30.00
3 7/16	21455	21455Z	3 1/4	10 1/2	2 3/4	13	7	5	3/4	1 3/8	6 1/4	5 1/4	8 9/32	1 1/4	1/2	43.00
3 15/16	21463	21463Z	3 1/2	12	3	14 3/4	8	5 1/2	3/4	1 1/2	6 13/16	5 7/8	9 13/16	1 3/8	1/2	61.00
4 7/16	21471	21471Z	4 1/8	13 1/2	3 1/2	16 1/2	9	6 1/4	7/8	1 3/4	7 7/8	6 5/8	10 1/4	1 1/2	1/2	92.00
4 15/16	21479	21479Z	4 1/2	15	4	18	10	7	7/8	1 7/8	8 9/16	7 1/4	11 3/16	1 5/8	1/2	119.00
5 7/16	21487	-	5	15 3/4	4 1/2	19 1/4	11	7 3/4	1	2	9 3/8	7 7/8	12 1/4	1 3/4	1/2	166.00
5 15/16	21495	21495Z	5 1/2	16 1/2	5	20 1/2	12	8 1/2	1 1/8	2 1/8	10 1/4	8 1/2	13 7/8	1 7/8	1/2	198.00
6 7/16	214103	214103Z	6	18	5 1/2	22	13	9 1/2	1 1/8	2 1/4	11	9 1/8	15 1/8	1 7/8	1/2	260.00
6 1/2	214104	214104Z														255.00
7	214112	214112Z	6 1/2	19	6	23	14	10	1 1/4	2 3/8	11 3/4	9 3/4	15 7/8	2	1/2	311.00
8	-	214128Z	7	21 1/2	6 3/4	26	16	11	1 3/8	2 1/2	13 5/16	11 3/8	17 7/8	2 1/4	1/2	425.00
Cast Steel																
1 15/16	-	2K1431Z	1 3/4	6 1/2	1 3/4	8 1/4	4	3 1/2	1/2	7/8	3 7/16	3	4 1/2	3/4	1/4	11.00
2 3/16	-	2K1435Z	1 7/8	6 3/4	1 3/4	8 1/2	4 1/2	3 1/2	1/2	1	3 3/4	3 3/8	4 15/16	3/4	3/8	15.00
2 7/16	-	2K1439Z	2 1/8	8	2	10 1/4	5	4	5/8	1 1/8	4 3/16	3 3/4	5 3/8	1	3/8	21.00
2 11/16	-	2K1443Z	2 1/4	8 1/4	2 1/4	10 1/2	5 1/2	4 1/4	5/8	1 1/4	4 1/2	4	6	1	3/8	28.30
2 15/16	-	2K1447Z	2 1/2	8 3/4	2 1/2	11	6	4 1/2	5/8	1 3/8	4 7/8	4 1/4	6 7/8	1	3/8	34.00
3 7/16	-	2K1455Z	3 1/4	10 1/2	2 3/4	13	7	5	3/4	1 3/8	6 1/4	5 1/4	8 9/32	1 1/4	1/2	49.00
3 15/16	-	2K1463Z	3 1/2	12	3	14 3/4	8	5 1/2	3/4	1 1/2	6 13/16	5 7/8	9 13/16	1 3/8	1/2	69.00
4 7/16	-	2K1471Z	4 1/8	13 1/2	3 1/2	16 1/2	9	6 1/4	7/8	1 3/4	7 7/8	6 5/8	10 1/4	1 1/2	1/2	104.00
4 15/16	-	2K1479Z	4 1/2	15	4	18	10	7	7/8	1 7/8	8 9/16	7 1/4	11 3/16	1 5/8	1/2	134.00
5 7/16	-	2K1487Z	5	15 3/4	4 1/2	19 1/4	11	7 3/4	1	2	9 3/8	7 7/8	12 1/4	1 3/4	1/2	187.00
5 15/16	-	2K1495Z	5 1/2	16 1/2	5	20 1/2	12	8 1/2	1 1/8	2 1/8	10 1/4	8 1/2	13 7/8	1 7/8	1/2	213.00
6 1/2	-	2K14104Z	6	18	5 1/2	22	13	9 1/2	1 1/8	2 1/4	11	9 1/8	15 1/8	1 7/8	1/2	287.00
7	-	-	6 1/2	19	6	23	14	10	1 1/4	2 3/8	11 3/4	9 3/4	15 7/8	2	1/2	350.00
8	-	2K14128Z	7	21 1/2	6 3/4	26	16	11	1 3/8	2 1/2	13 5/16	11 3/8	17 7/8	2 1/4	1/2	478.00
9	-	2K14144Z	8	23	6	29	16	10 1/2	1 1/2	2 3/4	14 7/8	12 1/2	20 3/8	2 3/4	1/2	530.00
10	-	2K14160Z	9	25	6	31	16	10 1/2	1 3/4	3	16 7/8	14	22 7/8	3	1/2	650.00
12	-	2K14192Z	11	29	7 1/2	36	18	12 1/2	2	3 1/2	20	16	27	3 1/2	1/2	910.00

Additional Notes

- Please call 1-866-REXNORD for availability
- One pipe tapped hole (two holes for shafts larger than 5 in for lubrication
- Grease cup or fitting not included
- LHD sliding base take-up can be drilled for these pillow blocks
- For the Selection Guide, Load Ratings and Speed Limits, see the Link-Belt Sleeve Bearing Engineering section on pages 534 - 537.
- Note: Dimensions subject to change. Certified dimensions of ordered material furnished on request.

21500, 21500Z

Photo Shows a 4-Bolt Rigid Sleeve Bearing Two-Piece Pillow Block Unit with Bronze Bushing

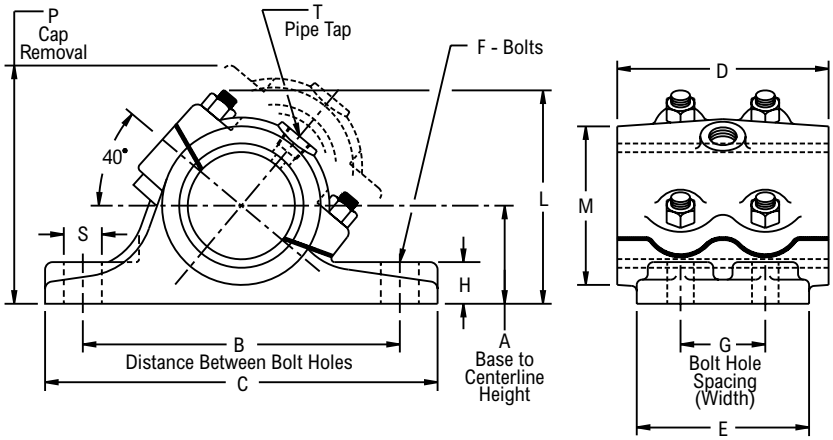

Product Features

- Corrosion-resistant powder coating
- Cast iron housing
- Two-piece angular joint design
- Babbitt or Bronze sleeve
- 4-bolt base
- Relubricatable
- See Features and Benefits for additional info on page 532.

Bearing Dimensions

Shaft Diameter	Babbitt Part Number	Bronze Part Number	A Base to Centerline Height	B Distance Between Bolt Holes	G Bolt Hole Spacing (Width)	C	D	E	F	H	L	M	P	S	T	Approx. Weight
1 15/16	21531	21531Z	2 1/4	6 1/2	1 3/4	8 1/4	4	3 1/2	1/2	7/8	4 1/2	3	5 1/4	3/4	1/4	10.00
2 3/16	21535	21535Z	2 1/2	6 3/4	1 3/4	8 1/2	4 1/2	3 1/2	1/2	1	4 7/8	3 3/8	5 3/4	3/4	3/8	14.00
2 7/16	21539	21539Z	2 3/4	8	2	10 1/4	5	4	5/8	1 1/8	5 5/16	3 3/4	6 1/8	1	3/8	17.00
2 11/16	21543	21543Z	3	8 1/4	2 1/4	10 1/2	5 1/2	4 1/4	5/8	1 1/4	6	4	7	1	3/8	27.00
2 15/16	21547	21547Z	3 1/4	8 3/4	2 1/2	11	6	4 1/2	5/8	1 3/8	6 3/8	4 1/4	7 1/2	1	3/8	29.00
3 7/16	21555	21555Z	3 1/2	10 1/2	2 3/4	13	7	5	3/4	1 1/2	7 1/8	5 1/4	9	1 1/4	1/2	43.00
3 15/16	21563	21563Z	3 3/4	12	3	14 3/4	8	5 1/2	3/4	1 5/8	8 1/4	5 7/8	10 1/4	1 3/8	1/2	60.00
4 7/16	21571	21571Z	4 1/8	13 1/2	3 1/2	16 1/2	9	6 1/4	7/8	1 3/4	8 7/8	6 5/8	11	1 1/2	1/2	87.00
4 15/16	21579	21579Z	4 1/2	15	4	18	10	7	7/8	1 7/8	9 3/4	7 1/4	12	1 5/8	1/2	119.00
5 7/16	21587	21587Z	5	15 3/4	4 1/2	19 3/4	11	8	1	2	10 13/16	7 7/8	13 1/2	1 7/8	1/2	163.00
5 15/16	21595	21595Z	5 1/2	16 1/2	5	20 1/2	12	8 1/2	1 1/8	2 1/8	11 29/32	8 1/2	14 5/8	1 7/8	1/2	192.00
6 1/2	215104	215104Z	6	18	5 1/2	22	13	9 1/2	1 1/8	2 1/4	11 3/4	9 1/8	14 3/4	1 7/8	1/2	255.00
7	215112	215112Z	6 1/2	19	6	23	14	10	1 1/4	2 3/8	13 11/16	9 3/4	16 5/8	2	1/2	295.00
8	215128	215128Z	8	23	6	29	16	10 1/2	1 1/2	2 3/4	16 1/8	12 1/2	22	2 3/4	1/2	575.00

Additional Notes

- Please call 1-866-REXNORD for availability
- One pipe tapped hole (two holes for shafts larger than 5 in for lubrication
- Grease cup or fitting not included
- For the Selection Guide, Load Ratings and Speed Limits, see the Link-Belt Sleeve Bearing Engineering section on pages 534 - 537.
- Note: Dimensions subject to change. Certified dimensions of ordered material furnished on request.

F2200, F2200Z

Photo Shows a 4-Bolt Rigid Sleeve Bearing Flanged Unit with Bronze Bushing

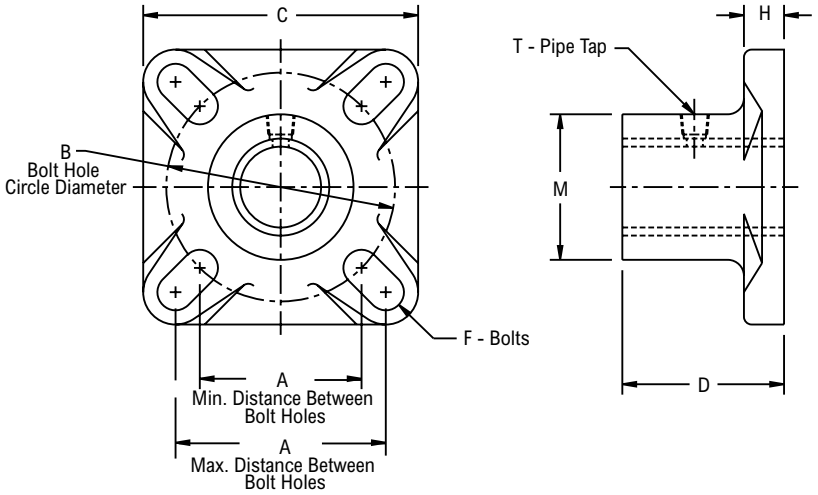

Product Features

- Corrosion-resistant powder coating
- Cast iron one piece housing
- Babbitt or Bronze sleeve
- Relubricatable
- See Features and Benefits for additional info on page 532.

Bearing Dimensions

Shaft Diameter	Babbitt Part Number	Bronze Part Number	A Min. Distance Between Bolt Holes	A Max. Distance Between Bolt Holes	B Bolt Hole Circle Diameter	C	D	F	H	M	T	Approx. Weight
3/4	F2212	F2212Z	2 1/8	2 1/2	3	3 3/8	1 1/2	3/8	7/16	1 1/2	1/8	1.70
7/8	F2214	F2214Z	2 1/8	2 3/4	3	3 3/4	2	3/8	1/2	1 7/8	1/8	2.50
15/16	F2215	F2215Z										
1	F2216	F2216Z										2.40
1 3/16	F2219	F2219Z	2 1/2	3 1/4	3 9/16	4 1/4	2 1/2	1/2	5/8	2 1/4	1/8	3.70
1 1/4	F2220	F2220Z										3.60
1 7/16	F2223	F2223Z	2 29/32	4	4 1/8	5 1/8	3	1/2	3/4	2 1/2	1/4	5.00
1 1/2	F2224	F2224Z										4.80
1 11/16	F2227	F2227Z	3 9/32	4 1/8	4 5/8	5 3/8	3 1/2	1/2	3/4	2 7/8	1/4	10.40
1 3/4	F2228	F2228Z										10.20
1 15/16	F2231	F2231Z	3 23/32	5 1/8	5 1/4	6 3/8	4	5/8	7/8	3 1/4	1/4	10.60
2	F2232	F2232Z										10.30
2 3/16	F2235	F2235Z	4 1/16	5 1/8	5 3/4	6 3/8	4 1/2	5/8	7/8	3 5/8	1/4	14.80
2 7/16	F2239	F2239Z	4 13/32	5 5/8	6 1/4	6 7/8	5	5/8	1	4	3/8	16.50
2 15/16	F2247	F2247Z	5 7/32	6	7 3/8	7 3/4	6	3/4	1 1/8	4 3/4	3/8	27.00
3	F2248	F2248Z										26.30
3 7/16	F2255	F2255Z	5 29/32	6 3/4	8 3/8	8 9/16	7	3/4	1 1/4	5 1/2	1/2	40.50
3 15/16	F2263	F2263Z	6 23/32	7 5/8	9 1/2	9 3/4	8	7/8	1 1/2	6 3/8	1/2	65.00

Additional Notes

- Please call 1-866-REXNORD for availability
- One pipe tapped hole for lubrication
- Grease cup or fitting not included
- For the Selection Guide, Load Ratings and Speed Limits, see the Link-Belt Sleeve Bearing Engineering section on pages 534 - 537.
- Note: Dimensions subject to change. Certified dimensions of ordered material furnished on request.

DSB2800

Photo Shows a Heavy Duty Removable Top Conveyor Take-up Frame with Rigid Sleeve Bearing Take-up Unit

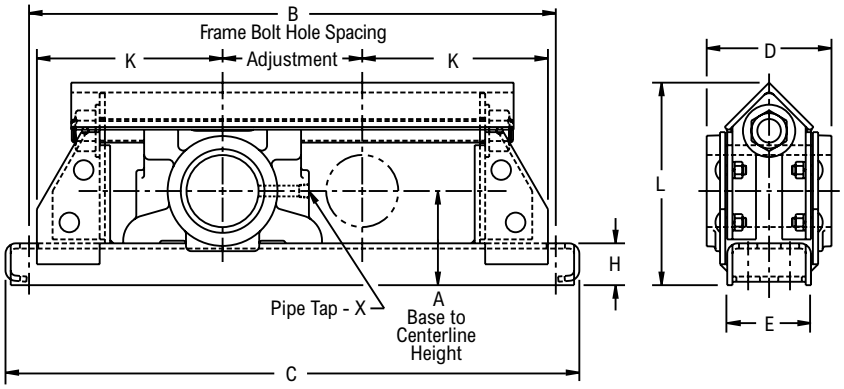

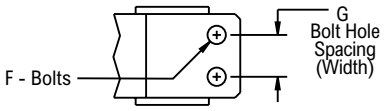

Product Features

- Protected screw type frame
- Corrosion-resistant powder coating
- Cast iron housing
- Babbitt sleeve
- Relubricatable
- See Features and Benefits for additional info on page 532.

Bearing Dimensions

Shaft Diameter	Adjust.	Part Number	A Base to Centerline Height	B Frame Bolt Hole Spacing	G Bolt Hole Spacing (Width)	C	D	E	F	H	K	L	X	Radial Factor	Approx. Weight
1 15/16	12	DSB283112	3 1/4	26 1/2	-	29 1/2	4	3	5/8	1 3/4	7 3/4	7 1/4	1/4	1	39.00
	18	DSB283118		32 1/2		35 1/2									45.00
2 3/16	12	DSB283512	3 3/8	27 1/2	-	29 1/2	4	3	5/8	1 3/4	7 3/4	7 1/4	3/8	1	42.00
	18	DSB283518		33 1/2		35 1/2									48.00
2 7/16	12	DSB283912	3 1/2	28 1/2	-	30 1/2	5	3	3/4	1 3/4	8 1/4	7 1/2	3/8	1	49.00
	18	DSB283918		34 1/2		36 1/2									55.00
	24	DSB283924		40 1/2		42 1/2									60.00
2 15/16	12	DSB284712	4 1/8	30 1/2	2	32 1/2	6	4	5/8	2	9 1/4	8 3/4	3/8	1	72.00
	18	DSB284718		36 1/2		38 1/2									81.00
	24	DSB284724		42 1/2		44 1/2									89.00
3 7/16	12	DSB285512	4 1/2	32	2	34 1/4	7	4	3/4	2	10	9 11/16	1/2	1	94.00
	18	DSB285518		38		40 1/4									103.00
	24	DSB285524		44		46 1/4									111.00
3 15/16	12	DSB286312	5	36	2 1/2	38 1/2	8	5	3/4	2 1/4	12	10 15/16	1/2	1	138.00
	18	DSB286318		42		44 1/2									150.00
	24	DSB286324		48		50 1/2									160.00

Additional Notes

- Please call 1-866-REXNORD for availability
- One pipe tapped hole for lubrication
- Grease cup or fitting not included
- For replacement bearing unit, specify take-up number without amount of adjustment, i.e. DSB2831
- Take-ups with adjustment of 18 in *(457.2 mm)* or more have center supporting pad welded to bottom of frame
- For radial loads, multiply load rating by a factor of 1.0
- For the Selection Guide, Load Ratings and Speed Limits, see the Link-Belt Sleeve Bearing Engineering section on pages 534 - 537.
- Note: Dimensions subject to change. Certified dimensions of ordered material furnished on request.

Rigid Sleeve Bearing Replacement Parts

Bushing

1000Z Part Numbers

Shaft Diameter	Pillow Block	Replacement Bushing
	Part Number	Part Number
1/2	1008Z	285Y222101
5/8	1010Z	285Y222104
3/4	1012Z	285Y222105
7/8	1014Z	285Y2221
15/16	1015Z	285Y2222
1	1016Z	285Y2223
1 1/8	1018Z	285Y2224
1 3/16	1019Z	285Y2225
1 1/4	1020Z	285Y2226
1 3/8	1022Z	285Y2228
1 7/16	1023Z	285Y2229
1 1/2	1024Z	285Y22210
1 11/16	1027Z	285Y22211
1 3/4	1028Z	285Y22212
1 15/16	1031Z	285Y22213
2	1032Z	285Y22214
2 3/16	1035Z	285Y22215
2 7/16	1039Z	285Y22217
2 15/16	1047Z	285Y22223
3 7/16	1055FZ	285Y22225
3 15/16	1063FZ	285Y22227

F2200Z Part Numbers

Shaft Diameter	Flange Block	Replacement Bushing
	Part Number	Part Number
3/4	F2212Z	285Y22296
7/8	F2214Z	285Y2221
15/16	F2215Z	285Y2222
1	F2216Z	285Y2223
1 3/16	F2219Z	285Y2225
1 1/4	F2220Z	285Y2226
1 7/16	F2223Z	285Y2229
1 1/2	F2224Z	285Y22210
1 11/16	F2227Z	285Y22211
1 3/4	F2228Z	285Y22212
1 15/16	F2231Z	285Y22213
2	F2232Z	285Y22214
2 3/16	F2235Z	285Y22215
2 7/16	F2239Z	285Y22217
2 15/16	F2247Z	285Y22223
3	F2248Z	285Y22224
3 7/16	F2255Z	285Y22225
3 15/16	F2263Z	285Y22227

Additional Notes

Bronze replacement bearings are sold with lube groove. Provision should be made to lock the bearing to the housing.

Rigid Sleeve Bearing Replacement Parts

Bushing

Shims

21200Z Part Numbers

Shaft Diameter	Pillow Block	Replacement Bushing	Shims	
	Part Number	Part Number	Part Number	Quantity
7/8	21214Z	285BY24	131Y9541	2
15/16	21215Z	285BY25	131Y95421	2
1	21216Z	285BY26	131Y95421	2
1 1/16	21217Z	285BY215	131Y95424	2
1 1/8	21218Z	285BY27	131Y9542	2
1 3/16	21219Z	285BY28	131Y95422	2
1 1/4	21220Z	285BY29	131Y95422	2
1 3/8	21222Z	285BY210	131Y95423	4
1 7/16	21223Z	285BY211	131Y95423	4
1 1/2	21224Z	285BY212	131Y95423	4
1 9/16	21225Z	285BY213	131Y95424	4
1 5/8	21226Z	285BY214	131Y95424	4
1 11/16	21227Z	285BY215	131Y95424	4
1 3/4	21228Z	285BY216	131Y95424	4
1 15/16	21231Z	285BY217	131Y95425	4
2	21232Z	285BY218	131Y95425	4
2 3/16	21235Z	285BY219	131Y95426	4
2 1/4	21236Z	285BY220	131Y95426	4
2 7/16	21239Z	285BY222	131Y95427	4
2 1/2	21240Z	285BY224	131Y95427	4
2 11/16	21243Z	285BY225	131Y95428	4
2 15/16	21247Z	285BY229	131Y95429	4
3	21248Z	285BY230	131Y95429	4
3 7/16	21255Z	285BY232	131Y95430	4
3 15/16	21263Z	285BY236	131Y95431	4

21400Z, 2K1400Z Part Numbers

Shaft Diameter	Pillow Block	Replacement Bushing	Shims	
	Part Number	Part Number	Part Number	Quantity
1 15/16	21431Z, 2K1431Z	285BY31	131Y3661	4
2 3/16	21435Z, 2K1435Z	285BY33	131Y3663	4
2 7/16	21439Z, 2K1439Z	285BY37	131Y3665	4
2 11/16	21443Z, 2K1443Z	285BY39	131Y3667	4
2 15/16	21447Z, 2K1447Z	285BY313	131Y3669	4
3 7/16	21455Z, 2K1455Z	285BY317	131Y36611	6
3 15/16	21463Z, 2K1463Z	285BY319	131Y36613	6
4 7/16	21471Z	285BY321	131Y36615	8
4 7/16	2K1471Z	285BY322	131Y36615	8
4 15/16	21479Z	285BY325	131Y36617	8
4 15/16	2K1479Z	285BY326	131Y36617	8
5 7/16	21487Z, 2K1487Z	285BY329	131Y36618	12
5 15/16	21495Z, 2K1495Z	285BY331	131Y36621	12
6 7/16	214103Z, 2K14103Z	285BY333	131Y36622	12
6 1/2	214104Z, 2K14104Z	285BY334	131Y36622	12
7	214112Z, 2K14112Z	285BY335	131Y36625	12
7 1/2	214120Z, 2K14120Z	285BY336	131Y36628	12
8	214128Z, 2K14128Z	285BY337	131Y36630	12
9	2K14144Z	285BY338	131Y36620	2
10	2K14160Z	285BY340	131Y36624	2
12	2K14192Z	285BY341	131Y36626	2

Additional Notes

Replacement bronze bearings are pre-split with lube groove. Provision should be made to lock each bearing segment to the base and cap. Replacement bronze bearings and shims must be ordered as individual items.

Rigid Sleeve Bearing Replacement Parts

Bushing

Shims

21500Z Part Numbers

Shaft Diameter	Pillow Block	Replacement Bushing	Shims	
	Part Number	Part Number	Part Number	Quantity
1 15/16	21531Z	285BY217	131Y95425	4
2 3/16	21535Z	285BY219	131Y95426	4
2 7/16	21539Z	285BY222	131Y95427	4
2 11/16	21543Z	285BY225	131Y95428	4
2 15/16	21547Z	285BY229	131Y95429	4
3 7/16	21555Z	285BY233	131Y9549	6
3 15/16	21563Z	285BY237	131Y95410	6
4 7/16	21571Z	285BY240	131Y95411	8
4 15/16	21579Z	285BY242	131Y95412	8
5 7/16	21587Z	285BY244	131Y95434	12
5 15/16	21595Z	285BY331	131Y36621	12
6 1/2	215104Z	285BY334	131Y36622	12
7	215112Z	285BY335	131Y36625	12
8	215128Z	285BY337	131Y36616	2

Additional Notes

Replacement bronze bearings are pre-split with lube groove. Provision should be made to lock each bearing segment to the base and cap. Replacement bronze bearings and shims must be ordered as individual items.

Sleeve Bearings
Flex Block: Link-Belt

Contents

	Page
Features and Benefits	552
Nomenclature	553
Engineering	554
Dimensions	
Pillow Blocks	557
Flange Blocks	558
Take-up Frames	560

Industries Served

Commercial Furnaces
Heat Treatment
Wastewater Management
Dams
Air Handling

3200 Series Flex-block Sleeve Bearing Units

Flex-block Sleeve Bearings are alignable and self-lubricating. Because the bearing material wears gradually under operation, sudden breakdowns and costly maintenance are minimized. The standard bearing insert materials of oil impregnated porous sintered bronze, or self-lubricating graphite are widely used for the extreme applications of modern industry.

1. One-piece Housing

Sturdy one-piece housings, with machined mounting surfaces, are available as pillow blocks or flanged units.

2. Machined Surface

Component has machined spherical surface for proper seating in housing and for initial mounting alignment.

3. Self-Lubricating or Oil Impregnated

Bearing sleeve, pressed into component, is available in self-lubricating or oil impregnated material.

4. Extend Unit Life

When the component retaining screw is loosened, the insert can be rotated 180° to utilize unused bearing surface and extend the life of the unit.

Bearings Components

Heart of the flex-block bearing is the alignable insert into which is pressed a self-lubricating bearing. The component has a machined spherical surface that is alignable in the housing.

Two types of bearings are available:

1. Sintered bronze sleeve, oil impregnated, for operating temperatures to 200°F *(93°C)*.
2. Self-lubricating carbon-graphite sleeve, for temperatures to 700°F *(371°C)*.

One-piece Cast Iron Housings

Compact one-piece cast iron housings provide strength and superior rigidity. All units are designed with standard mounting dimensions and have finished mounting surfaces for proper installation stability. Pillow blocks have slotted bolt holes with ample space provided for drilling dowel pin holes. Flanged units have drilled mounting holes.

Pillow Blocks

3200P

Alignable pillow blocks have a high-test iron housing, 2-bolt base, and self-lubricating bearing. For shaft sizes 5/8" through 3 15/16".

Flanged Units - 2-bolt

3200FX

Alignable flanged units have 2-bolt cast iron housing and self-lubricating bearing. For shaft sizes 5/8" through 1 3/4".

Flanged Units - 4-bolt

3200F

Alignable flanged units have 4-bolt cast iron housing and self-lubricating bearing. For shaft sizes 5/8" through 3 7/16".

Nomenclature

32 16 F T1 S C

Symbol	Description
32	Standard duty series
16	Shaft diameter in 16ths of an inch
F	Flanged unit, 4-bolt
FX	Flanged unit, 2-bolt
P	Pillow block
T1	Porous sintered bronze, oil impregnated, 200°F max.
T3	Self-lubricating carbon graphite, 700°F max.
T4	Plain bore (cast iron), 1000°F max.
None	Standard length
S	Short sleeve, (F, FX units)
C	Closed end unit

The nomenclature shown is provided to identify the basic and optional features of bearing and mounted unit assemblies. The most commonly specified variations are listed; however, availability of all variations cannot be assumed. Link-Belt Bearing Division, Rexnord Corporation should be consulted regarding optional features, availability, and the application requirements.

Flex-block Sleeve Bearing Selection Guide

To select a flex-block sleeve bearing, determine the applied radial load and the applicable operating conditions. The procedure shown here will aid in selecting an appropriate bearing.

The bearing ratings apply when certain installation and operating conditions are met and when any other adverse ambient conditions such as high or low temperatures, extreme dirt or moisture, chemical contamination, shock or vibration loading direct or induced, oscillating shafts, intermittent operation and related factors are carefully considered.

The ratings used apply when the following conditions are met:

1. Normal running loads should not exceed the ratings shown in the tables. Starting and occasional peak loads should not exceed these ratings by more than 100%.
2. The shaft finish through the bearing bore should be at least as smooth as commercial steel shafting which varies from 8 to 50 micro-inches *(0.2 µm to 1.3 µm)*. There also should be no machined or ground spiral lead on the shaft journal. For improved bearing performance the shaft finish should not exceed 12 micro-inches *(0.3 µm)*. Shafting should also be within the diameter tolerances.
3. Ambient temperatures should not be lower than 32°F *(0°C)* for T1 bearing material. The upper operating temperature limits are as follows: T1—200°F *(93°C)* T3—700°F *(371°C)*
4. Sturdy, vibration free supporting structures should be provided.
5. Flex-block units should not be exposed to severe dirt conditions.

Steps for Selection

Step 1

Determine the maximum operating temperature of the application.

Step 2

From Table 1, select the bearing insert material.

Step 3

Refer to the radial load rating tables to determine the shaft diameter necessary to obtain the required radial load rating at the given speed. Where short bearings are required, multiply the radial load by the short bearing factor before selecting the bearing.

Step 4

To position a shaft axially or where light thrust loads are present, provide flat washers of the desired material backed by a shaft collar or a machined shaft shoulder against the end of the bearing. The bearing ends are already machined.

Table 1 – Bearing insert material selection

Bearing Insert Suffix	Bearing material	Type of Lubrication	Type of Unit	Available Bore size
T1	Oil impregnated porous sintered bronze	Oil	P FX F	5/8" – 3 15/16" 5/8" – 1 3/4" 5/8" – 3 7/16"
T3	Machined carbon-graphite	Self-lubricating	P FX F	5/8" – 3 15/16" 5/8" – 1 3/4" 5/8" – 3 7/16"

Bearing Insert Suffix	Minimum Temperature Limit	Maximum Temperature Limit	Comments
T1	32°F *(0°C)*	200°F *(93°C)*	
T3	. . . .	700°F *(371°C)*	material somewhat brittle—handle with care—no significant shock loads

Additional Information

Flex-block Bearing Materials:

Sleeve bearing inserts made of T1 oil impregnated porous sintered bronze are universally accepted as providing reasonable capacity and dependable service. When lubricant is present damage to shafts or rotors is minimized. Additional SAE 40 oil can be periodically added to extend the bearing life. The T1 bearing operating temperature should not exceed 200°F *(93°C)*. Applications are restricted to those involving light to moderate loads and mild shock. Caution: Do not use stainless steel shaft.

T3 machined carbon graphite bearings are self-lubricating with material worn from the bearing. T3 bearing inserts are limited to a maximum operating temperature of 700°F *(371°C)*. The radial load applied, the shaft surface finish and the speed of operation determine the wear life of the bearing. As machined carbon graphite is somewhat brittle, care should be taken during handling and mounting to avoid chipping the corners, etc.

Additional Features:

By the very nature of their design all flex-block sleeve bearing units are expansion type, in that the shaft journal is free to move axially through the bore of the bearing. To fix a unit, a combination of shaft shoulders and/or thrust collars with flat washers of the desired material can be utilized.

Flex-block pillow blocks have cored mounting bolt holes suitable for the inch or metric bolts listed. Flanged units have drilled mounting holes 1/32" *(0.8 mm)* larger than the largest inch bolt shown.

Bearings are not replaceable in the components. Replacement components can be ordered but generally the entire unit is replaced when required.

2 and 4-bolt flanged units can be supplied with regular or short bearings.

The short bearing inserts do not project beyond the housing mounting face. When the short bearing is selected, the applied radial load must be multiplied by the short bearing factor before selecting the bearing size.

End closures can be furnished but they require specially machined housings. When end closures are used, shafts should extend no more than 1/8" *(3.2 mm)* beyond the end of the bearing.

Operation:

Flex-block sleeve bearing units are self-lubricating and ready for operation. Being alignable, they are also easy to mount and careful shaft alignment is not required. However shaft journals must turn freely without binding in the bearing or excessive heat and seizure can result. Any factors which may disrupt or remove the lubricant film should be eliminated. Sharp edges on the shaft or the bearing surface can act as scrapers to destroy lubricant film. Do not extend shaft keyways into bearing bores.

Take-ups:

Flex-block pillow blocks can be mounted on universal take-up frames LC.

Shaft Tolerances:

Shaft diameters for flex-block sleeve bearing units are usually held to the following regular commercial tolerances:

Shaft Diameters Recommended Tolerance

5/8" through 2"	Nominal to –.003"
2 1/2" through 4"	Nominal to –.004"

Caution: Do not use stainless steel shaft, if bearing insert T1 is used.

Commercial shaft finish if free of nicks, burrs, scratches, etc. is generally satisfactory. Improved surface finish of 12 micro-inches *(0.3 µm)* or less will extend wear life.

Warning

The reliability built in all Rexnord bearings can be realized in service only when bearings are correctly selected, properly installed, protected and maintained.

The correct selection of flex-block sleeve bearing mounted units requires that the magnitude and nature of all loads, speeds, alignment, mounting, operating requirements and maintenance be adequately considered. The selection of materials for and design of shafting, fasteners, seals and accessories as well as provisions for installation and maintenance must follow good engineering principles.

Housings should not be used under tension loads except with adequate safety factors. For this reason pillow blocks are best suited to withstand radial loads passing through the base. When heavy loads or shock loads are possible it is most important to mount a unit so that the line of force passes directly into the mounting surface, or so that the unit is directly and substantially supported other than through its mounting bolts. Where the line of force falls outside the mounting surface, serious housing and fastener deflection or failure may occur. Rexnord Bearing Division should be consulted where unusual loading conditions exist.

Radial Load Ratings for 10 to 300 RPM (pounds/*newtons*)*

Shaft Diameter	Basic Bearing Number	Type Bearing Material	Shaft Speed RPM														Short Bearing Factor
Inches			10 to 25		50		75		100		150		200		300		
5/8	3210	T1	586	*2607*	586	*2607*	586	*2607*	586	*2607*	476	*2117*	357	*1588*	238	*1059*	
11/16	3211	T3	296	*1317*	296	*1317*	296	*1317*	296	*1317*	240	*1068*	180	*801*	120	*534*	…
3/4	3212	T1	940	*4181*	940	*4181*	940	*4181*	940	*4181*	638	*2838*	479	*2131*	318	*1415*	
		T3	470	*2091*	470	*2091*	470	*2091*	470	*2091*	318	*1415*	240	*1068*	159	*707*	1.25
7/8	3214	T1	985	*4381*	985	*4381*	985	*4381*	860	*3825*	572	*2544*	430	*1913*	286	*1272*	
15/16	3215	T3															
1	3216		493	*2193*	493	*2193*	493	*2193*	430	*1913*	287	*1277*	215	*956*	144	*641*	…
1 1/8	3218	T1	1545	*6870*	1545	*6870*	1400	*6230*	1050	*4670*	701	*3118*	527	*2344*	350	*1557*	
1 3/16	3219	T3	773	*3438*	773	*3438*	700	*3114*	526	*2340*	350	*1557*	262	*1165*	175	*778*	1.22
1 1/4	3220	T1	2110	*9390*	985	*4381*	1720	*7650*	1295	*5760*	862	*3834*	650	*2891*	433	*1926*	
1 15/16	3221	T3															
1 3/8	3222																
1 7/16	3223		1055	*4690*	493	*2193*	860	*3825*	646	*2874*	430	*1913*	323	*1437*	215	*956*	1.42
1 1/2	3224	T1	3190	*14900*	3190	*14190*	2160	*9610*	1630	*7250*	1090	*4850*	815	*3625*	545	*2424*	
		T3	1595	*7100*	1595	*7100*	1080	*4800*	812	*3612*	543	*2415*	406	*1806*	272	*1210*	1.54
1 5/8	3226	T1	3450	*15350*	3240	*14410*	2160	*9610*	1620	*7210*	1090	*4850*	815	*3625*	545	*2424*	
1 11/16	3227	T3															
1 3/4	3228		1725	*7670*	1620	*7210*	1080	*4800*	812	*3612*	543	*2415*	406	*1806*	272	*1210*	1.41
1 15/16	3231	T1	4360	*19390*	3440	*15300*	2340	*10410*	1720	*7650*	1150	*5120*	860	*3825*	575	*2558*	
		T3	2180	*9700*	1720	*7650*	1170	*5200*	860	*3825*	575	*2558*	430	*1913*	288	*1281*	1.39
2	3232	T1	4750	*21130*	3620	*16100*	2420	*10760*	1810	*8050*	1210	*5380*	910	*4048*	608	*2705*	
2 1/8	3234	T3															
2 3/16	3235		2375	*10560*	1810	*8050*	1210	*5380*	908	*4039*	606	*2696*	454	*2019*	303	*1348*	1.47
2 1/4	3236	T1	6050	*26910*	4110	*18280*	2750	*12200*	2050	*9120*	1370	*6090*	1030	*4580*	687	*3056*	
2 7/16	3239	T3	3025	*13460*	2052	*9130*	1375	*6120*	1026	*4560*	686	*3051*	513	*2282*	343	*1526*	1.45
2 1/2	3240	T1	7500	*33360*	4590	*20420*	3050	*13570*	2290	*10190*	1530	*6810*	1145	*5090*	765	*3403*	
2 11/16	3243	T3	3750	*16680*	2290	*10190*	1530	*6810*	1145	*5090*	764	*3398*	573	*2549*	382	*1699*	1.51
2 3/4	3244	T1	9120	*40570*	5070	*22550*	3380	*15030*	2530	*11250*	1685	*7500*	1265	*5630*	844	*3754*	
2 15/16	3247	T3	4560	*20280*	2532	*11260*	1690	*7510*	1266	*5630*	845	*3759*	633	*2816*	423	*1882*	1.61
3 7/16	3255	T1	11500	*51150*	5720	*25440*	3820	*16990*	2880	*12810*	1925	*8560*	1440	*6410*	965	*4293*	
		T3	5710	*25410*	2860	*12720*	1910	*8500*	1440	*6410*	963	*4284*	720	*3203*	483	*2148*	1.31
3 15/16	3263	T1	15000	*66720*	7500	*33360*	5000	*22240*	3730	*16590*	2500	*11120*	1870	*8320*	1248	*5550*	
		T3	7520	*33450*	3750	*16680*	2500	*11120*	1865	*8300*	1250	*5560*	935	*4159*	625	*2780*	…

** For speeds slower than 10 RPM or for oscillating shafts, consult Rexnord Bearing Division*

Radial Load Ratings for 400 to 2500 RPM (pounds/*newtons*)*

Shaft Diameter Inches	Basic Bearing Number	Type Bearing Material	Shaft Speed RPM 400		500		750		1000		1500		2000		2500		Short Bearing Factor
5/8	3210	T1	180	*801*	144	*641*	96	*427*	71	*316*	48	*214*	36	*160*	29	*129*	
11/16	3211	T3	90	*400*	72	*320*	48	*214*	36	*160*	24	*107*	24	*80*	15	*67*	…
3/4	3212	T1	238	*1059*	191	*850*	128	*569*	96	*427*	64	*285*	48	*214*	38	*169*	
		T3	120	*534*	92	*409*	63	*280*	48	*214*	32	*142*	24	*107*	19	*84*	1.25
7/8	3214	T1	215	*956*	175	*778*	114	*507*	86	*383*	57	*254*	43	*191*	34	*151*	
15/16	3215	T3															
1	3216		108	*480*	86	*383*	57	*254*	43	*191*	29	*129*	22	*98*	..	…	….
1 1/8	3218	T1	263	*1170*	211	*939*	140	*623*	105	*467*	70	*311*	53	*236*	42	*187*	
1 3/16	3219	T3	131	*583*	105	*467*	70	*311*	53	*236*	35	*156*	..	…	..	…	1.22
1 1/4	3220	T1	322	*1432*	258	*1148*	172	*765*	130	*578*	86	*383*	65	*289*	52	*231*	
1 15/16	3221	T3															
1 3/8	3222																
1 7/16	3223		162	*721*	130	*578*	86	*383*	65	*289*	43	*191*	..	…	..	…	1.42
1 1/2	3224	T1	408	*1815*	325	*1446*	216	*961*	163	*725*	109	*485*	82	*365*	65	*289*	
		T3	203	*903*	162	*721*	109	*485*	81	*360*	…	…	..	…	..	…	1.54
1 5/8	3226	T1	408	*1815*	325	*1446*	216	*961*	162	*725*	109	*485*	82	*365*			
1 11/16	3227	T3															
1 3/4	3228		203	*903*	162	*721*	109	*485*	81	*360*	…	…	..	…			1.42
1 15/16	3231	T1	431	*1917*	344	*1530*	234	*1041*	172	*765*	115	*512*					
		T3	215	*956*	172	*765*	115	*512*	…	….	…	…					1.39
2	3232	T1	455	*2024*	363	*1615*	242	*1076*	181	*805*	125	*556*					
2 1/8	3234	T3															
2 3/16	3235		227	*1010*	182	*810*	121	*538*	…	….	…	…					1.47
2 1/4	3236	T1	515	*2291*	413	*1837*	275	*1223*	205	*912*	137	*609*					
2 7/16	3239	T3	257	*1143*	205	*912*	137	*609*	…	….	…	…					1.45
2 1/2	3240	T1	574	*2553*	460	*2046*	305	*1357*	229	*1019*							
2 11/16	3243	T3	287	*1277*	229	*1019*	153	*681*	…	….							1.51
2 3/4	3244	T1	635	*2825*	507	*2255*	338	*1503*	253	*1125*							
2 15/16	3247	T3	317	*1410*	253	*1125*	…	….	…	….							1.61
3 7/16	3255	T1	725	*3225*	580	*2580*	382	*1699*	290	*1390*							
		T3	363	*1615*	290	*1290*	…	….	…	….							1.31
3 15/16	3263	T1	936	*4164*	750	*3336*	500	*2224*									
		T3	468	*2082*	…	….	…	….									…

* *Load ratings are based on industry standards established by the Mechanical Power Transmission Association.*

3200P

Photo Shows a 2-Bolt Flex Block Sleeve Bearing Pillow Block Unit with Bronze Bushing

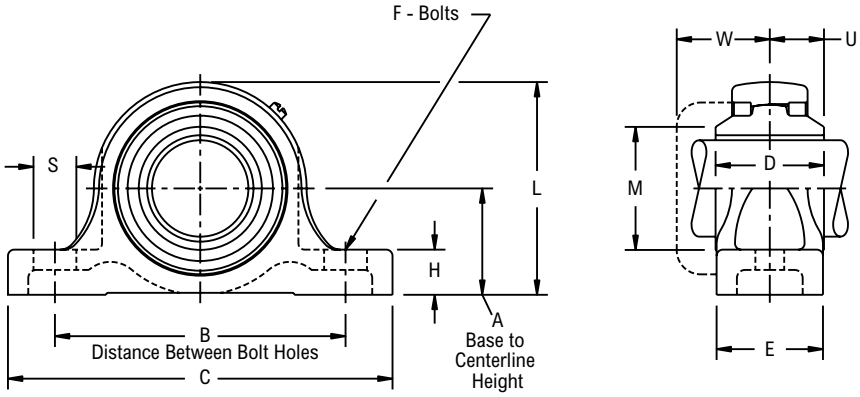

Product Features

Corrosion-resistant powder coating
Cast iron housing
T1 sintered bronze sleeve
T3 carbon graphite sleeve
2-bolt base
Alignable
See Features and Benefits for additional info on page 552.

Bearing Dimensions

Shaft Diameter	Carbon Graphite Self-Lubricating Part Number	Porous Sintered Bronze Oil Impregnated Part Number	A Base to Centerline Height	B Distance Between Bolt Holes	C	D	E	F	H	L	M	S	U	W	Approx. Weight
5/8	3210PT3	3210PT1	1 3/16	3 1/2	4 5/8	15/16	1 1/2	3/8	1/2	2 11/32	1 1/8	3/4	15/32	1 13/64	1.30
11/16	3211PT3	3211PT1													1.20
3/4	3212PT3	3212PT1	1 5/16	3 7/8	5 1/8	1 1/4	1 1/2	3/8	1/2	2 19/32	1 3/16	11/16	5/8	1 19/64	1.80
7/8	3214PT3	3214PT1	1 7/16	4	5 3/8	1 1/8	1 5/8	3/8	9/16	2 7/8	1 9/16	11/16	9/16	1 9/32	2.10
15/16	3215PT3	3215PT1													2.00
1	3216PT3	3216PT1													1.90
1 1/8	3218PT3	3218PT1	1 11/16	4 5/8	6 5/16	1 3/8	1 3/4	1/2	11/16	3 5/16	1 7/8	15/16	11/16	1 29/64	2.80
1 3/16	3219PT3	3219PT1													2.70
1 1/4	3220PT3	3220PT1	1 7/8	4 15/16	6 3/8	1 11/16	1 7/8	1/2	13/16	3 11/16	2 1/8	13/16	27/32	1 35/64	4.50
1 5/16	3221PT3	3221PT1													4.40
1 3/8	3222PT3	3222PT1													4.30
1 7/16	3223PT3	3223PT1													4.10
1 1/2	3224PT3	3224PT1	2	5 3/8	7 1/16	2 1/8	1 7/8	1/2	13/16	4	2 1/8	15/16	1 1/16	1 41/64	5.30
1 5/8	3226PT3	3226PT1	2 1/8	5 5/8	7 1/4	2 1/8	2	1/2	13/16	4 5/16	2 7/16	7/8	1 1/16	1 21/32	6.40
1 11/16	3227PT3	3227PT1													6.30
1 3/4	3228PT3	3228PT1													6.10
1 15/16	3231PT3	3231PT1	2 1/4	6 3/16	7 7/8	2 1/4	2 1/8	5/8	7/8	4 1/2	2 9/16	15/16	1 1/8	1 25/32	7.20
2	3232PT3	3232PT1	2 1/2	6 3/4	9 1/16	2 3/8	2 3/8	5/8	1	5	2 7/8	1 5/16	1 3/16	2 1/64	9.20
2 1/8	3234PT3	3234PT1													9.00
2 3/16	3235PT3	3235PT1													8.80
2 1/4	3236PT3	3236PT1	2 11/16	7 1/2	9 1/2	2 11/16	2 1/2	5/8	1 1/8	5 7/16	3 1/4	1 1/16	1 11/32	2 7/64	13.40
2 7/16	3239PT3	3239PT1													13.20
2 1/2	3240PT3	3240PT1	3	8 1/8	10 1/2	3	2 7/8	3/4	1 5/16	6	3 9/16	1 3/16	1 1/2	2 1/16	17.10
2 11/16	3243PT3	3243PT1													16.50
2 3/4	3244PT3	3244PT1	3 1/4	8 7/8	11 3/4	3 5/16	3 1/4	3/4	1 3/8	6 1/2	3 3/4	1 5/16	1 21/32	2 7/32	22.50
2 15/16	3247PT3	3247PT1													21.90
3 7/16	3255PT3	3255PT1	3 3/4	10	13	3 3/4	3 1/2	7/8	1 5/8	7 7/8	4 7/16	1 5/8	1 7/8	2 1/2	32.50
3 15/16	3263PT3	3263PT1	4 7/16	11 7/8	15 1/4	4 15/16	4 3/8	7/8	1 13/16	8 15/16	4 7/8	1 7/8	2 15/32	3 1/64	59.70

Additional Notes

Please call 1-866-REXNORD for availability
For replacement insert number, omit housing suffix designation, i.e. 3210T1
For the Selection Guide, Load Ratings and Speed Limits, see the Link-Belt Flex-block Bearing Engineering section on pages 554 - 556.
Note: Dimensions subject to change. Certified dimensions of ordered material furnished on request.

3200FX

Photo Shows a 2-Bolt Flex Block Sleeve Bearing Flanged Unit with Graphite Bushing

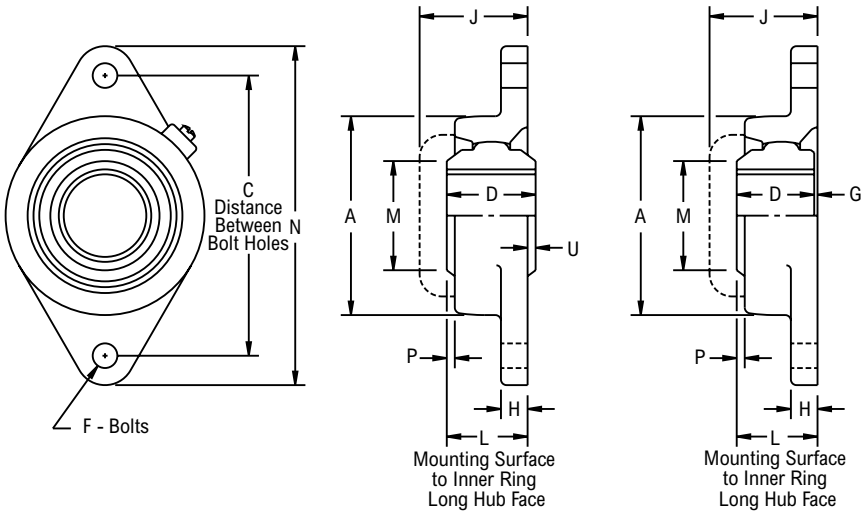

Product Features

- Corrosion-resistant powder coating
- Cast iron housing
- T1 sintered bronze sleeve
- T3 carbon graphite sleeve
- 2-bolt mounting
- Alignable
- See Features and Benefits for additional info on page 552.

Bearing Dimensions

Shaft Diameter	Carb on Graphite Self-Lubricating Part Number	Porous Sintered Bronze Oil Impregnated Part Number	C Distance Between Bolt Holes	L Mounting Surface to Inner Ring Long Hub Face	A	D Reg	D Short	F	G	H	J	M	N	P	U	Approx. Weight
5/8	3210FXT3	3210FXT1	3	1 7/64	2 1/8	15/16	-	3/8	17/64	1/2	1 25/32	1 1/8	3 7/8	7/64	-	1.00
11/16	3211FXT3	3211FXT1														0.90
3/4	3212FXT3	3212FXT1	3 17/32	1 23/64	2 7/16	1 1/4	1 1/8	3/8	1/4	9/16	2 1/64	1 3/16	4 13/32	5/32	-	1.20
7/8	3214FXT3	3214FXT1	3 57/64	1 5/16	2 11/16	1 1/8	-	7/16	3/16	19/32	2	1 9/16	4 29/32	1/16	-	1.70
15/16	3215FXT3	3215FXT1														1.60
1	3216FXT3	3216FXT1														1.50
1 1/8	3218FXT3	3218FXT1	4 19/32	1 15/32	3 3/16	1 3/8	1 1/4	7/16	7/32	19/32	2 15/64	1 7/8	5 19/32	5/32	-	2.50
1 3/16	3219FXT3	3219FXT1														2.30
1 1/4	3220FXT3	3220FXT1	5 1/8	1 21/32	3 5/8	1 11/16	1 1/2	1/2	5/32	5/8	2 23/64	2 1/8	6 1/8	1/4	1/32	3.70
1 5/16	3221FXT3	3221FXT1														3.60
1 3/8	3222FXT3	3222FXT1														3.50
1 7/16	3223FXT3	3223FXT1														3.30
1 1/2	3224FXT3	3224FXT1	5 21/32	1 31/32	4	2 1/8	1 3/4	1/2	5/32	5/8	2 35/64	2 1/8	6 25/32	25/64	5/32	4.90
1 5/8	3226FXT3	3226FXT1	5 27/32	1 31/32	4 1/4	2 1/8	1 13/16	1/2	5/32	5/8	2 9/16	2 7/16	7 3/32	3/8	5/32	6.20
1 11/16	3227FXT3	3227FXT1														6.00
1 3/4	3228FXT3	3228FXT1														5.90

Additional Notes

- Please call 1-866-REXNORD for availability
- For replacement insert number, omit housing suffix designation, i.e. 3210T1
- For short sleeves, add suffix “S”, i.e. 3220FXT1S
- For the Selection Guide, Load Ratings and Speed Limits, see the Link-Belt Flex-block Bearing Engineering section on pages 554 - 556.
- Note: Dimensions subject to change. Certified dimensions of ordered material furnished on request.

3200F

Photo Shows a 4-Bolt Flex Block Sleeve Bearing Flanged Unit with Graphite Bushing

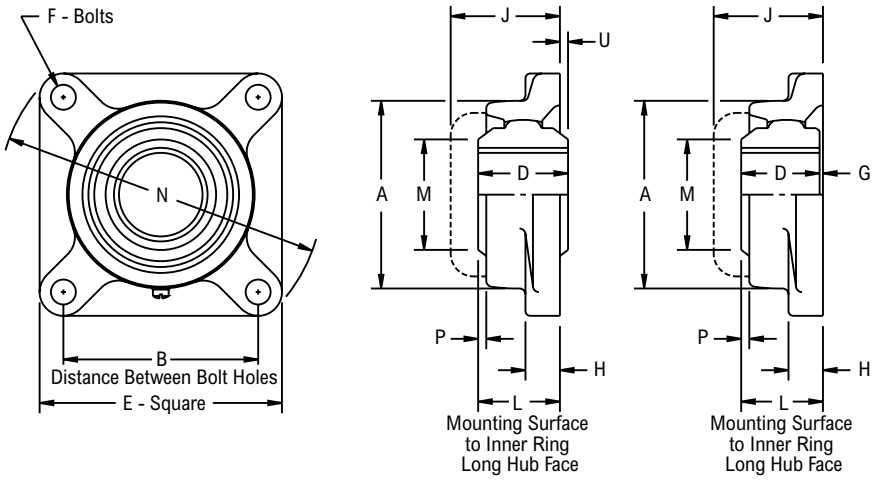

Product Features

- Corrosion-resistant powder coating
- Cast iron housing
- T1 sintered bronze sleeve
- T3 carbon graphite sleeve
- 4-bolt mounting
- Alignable
- See Features and Benefits for additional info on page 552.

Bearing Dimensions

Shaft Diameter	Carbon Graphite Self-Lubricating Part Number	Porous Sintered Bronze Oil Impregnated Part Number	B Distance Between Bolt Holes	L Mounting Surface to Inner Ring Long Hub Face	A	D Reg	D Short	E	F	G	H	J	M	N	P	U	Approx. Weight
5/8	3210FT3	3210FT1	2 1/8	1 7/64	2 1/8	15/16	-	3	3/8	17/64	1/2	1 25/32	1 1/8	3 7/8	7/64	-	1.20
11/16	3211FT3	3211FT1															1.10
3/4	3212FT3	3212FT1	2 1/2	1 23/64	2 7/16	1 1/4	1 1/8	3 3/8	3/8	1/4	9/16	2 1/64	1 3/16	4 13/32	5/32	-	1.50
7/8	3214FT3	3214FT1	2 3/4	1 5/16	2 11/16	1 1/8	-	3 3/4	7/16	3/16	19/32	2	1 9/16	4 29/32	1/16	-	2.10
15/16	3215FT3	3215FT1															2.00
1	3216FT3	3216FT1															1.90
1 1/8	3218FT3	3218FT1	3 1/4	1 15/32	3 3/16	1 3/8	1 1/4	4 1/4	7/16	7/32	19/32	2 15/64	1 7/8	5 19/32	5/32	-	3.20
1 3/16	3219FT3	3219FT1															2.90
1 1/4	3220FT3	3220FT1	3 5/8	1 21/32	3 5/8	1 11/16	1 1/2	4 5/8	1/2	5/32	5/8	2 23/64	2 1/8	6 1/8	1/4	1/32	4.50
1 5/16	3221FT3	3221FT1															4.40
1 3/8	3222FT3	3222FT1															4.30
1 7/16	3223FT3	3223FT1															4.10
1 1/2	3224FT3	3224FT1	4	1 31/32	4	2 1/8	1 3/4	5 1/8	1/2	5/32	5/8	2 35/64	2 1/8	6 25/32	25/64	5/32	5.60
1 5/8	3226FT3	3226FT1	4 1/8	1 31/32	4 1/4	2 1/8	1 13/16	5 3/8	1/2	5/32	5/8	2 9/16	2 7/16	7 3/32	3/8	5/32	7.10
1 11/16	3227FT3	3227FT1															6.80
1 3/4	3228FT3	3228FT1															6.70
1 15/16	3231FT3	3231FT1	4 3/8	2 5/32	4 1/2	2 1/4	1 15/16	5 5/8	1/2	7/32	3/4	2 13/16	2 9/16	7 7/16	27/64	3/32	7.80
2	3232FT3	3232FT1	5 1/8	2 11/32	4 15/16	2 3/8	2	6 3/8	5/8	11/32	29/32	3 11/64	2 7/8	8 1/2	13/32	1/32	10.00
2 1/8	3234FT3	3234FT1															9.80
2 3/16	3235FT3	3235FT1															9.50
2 1/4	3236FT3	3236FT1	5 5/8	2 5/8	5 3/8	2 11/16	2 1/4	6 7/8	5/8	3/8	15/16	3 25/64	3 1/4	9 7/32	27/64	1/16	12.80
2 7/16	3239FT3	3239FT1															12.60
2 1/2	3240FT3	3240FT1	5 7/8	2 19/32	5 7/8	3	2 1/2	7 3/8	5/8	3/32	3/4	3 5/32	3 9/16	9 13/16	7/16	13/32	16.60
2 11/16	3243FT3	3243FT1															15.90
2 3/4	3244FT3	3244FT1	6	2 13/16	6 3/8	3 5/16	2 11/16	7 3/4	3/4	1/8	3/4	3 3/8	3 3/4	10 1/4	17/32	1/2	20.40
2 15/16	3247FT3	3247FT1															19.80
3 7/16	3255FT3	3255FT1	6 3/4	3 13/32	7 1/2	3 3/4	3 5/16	8 9/16	3/4	3/32	1	4 1/32	4 7/16	11 3/8	1/2	11/32	29.50

Additional Notes

- Please call 1-866-REXNORD for availability
- For replacement insert number, omit housing suffix designation, i.e. 3210T1
- For short sleeves, add suffix “S”, i.e. 3220FT1S
- For the Selection Guide, Load Ratings and Speed Limits, see the Link-Belt Flex-block Bearing Engineering section on pages 554 - 556.
- Note: Dimensions subject to change. Certified dimensions of ordered material furnished on request.

LC

Photo Shows a Light Duty Conveyor Take-Up Frame

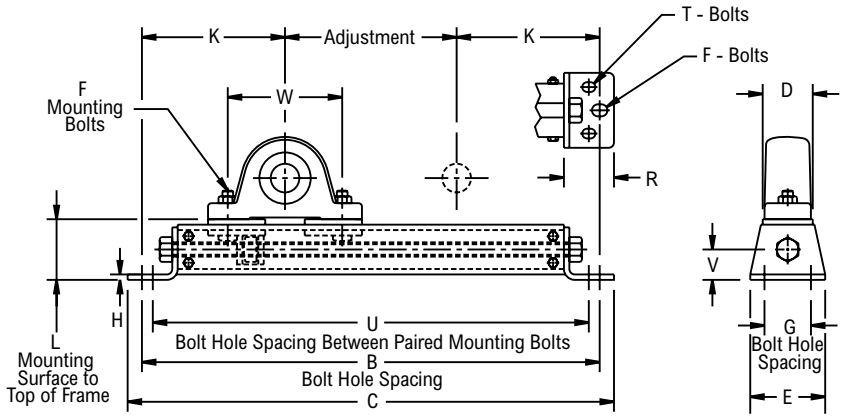

Product Features

- Bolted steel frames
- 2 or 4-bolt frame mounting
- Bolt hole centers adjustable
- Pillow blocks not included
- See Features and Benefits for additional info on page 552.

Bearing Dimensions

Size Code	Adjust. Length	Part Number	Bolt Hole Spacing B Frame	Bolt Hole Spacing G Width Direction	Bolt Hole Spacing U Between Pairs	L Mouting Surface to Top of Frame	C	D	E	F	H	K	R	T	V	W min	W max	Approx. Weight
205	6	LC16	16	1 5/8	15 1/4	2 1/8	17	1 3/4	2 5/8	3/8	3/16	5	1 3/4	5/16	1 1/16	3	5 15/16	5.25
	9	LC19	19		18 1/4		20											6.30
	12	LC112	22		21 1/4		23											6.60
210	6	LC26	19 1/8	2 1/8	18 1/8	2 11/16	20 1/4	2 3/8	3 1/8	1/2	1/4	6 9/16	2 3/16	3/8	1 11/32	3 3/4	7 1/4	10.00
	9	LC29	22 1/8		21 1/8		23 1/4											10.20
	12	LC212	25 1/8		24 1/8		26 1/4											11.50
	18	LC218	31 1/8		30 1/8		32 1/4											13.80
211/212	9	LC39	25 5/16	2 3/4	24 1/16	3 5/16	26 9/16	3	4	5/8	5/16	8 5/32	2 3/4	1/2	1 5/8	4 1/4	9	20.40
	12	LC312	28 5/16		27 1/16		29 9/16											22.25
	18	LC318	34 5/16		33 1/16		35 9/16											26.50
	24	LC324	40 5/16		39 1/16		41 9/16											33.00

Additional Notes

Please call 1-866-REXNORD for availability

For pillow block dimensions, see Pillow Block Ball Bearing section

Note: Dimensions subject to change. Certified dimensions of ordered material furnished on request.

Engineering Information

Contents

Contents	Page
Vibration Information	562
Shaft Size Tolerance	564
Setscrew Torque	565
Bearing Selection	567

Vibration Analysis and Defect Frequency Information

Vibration analysis equipment is used to chart the amplitude and frequency of vibration on key areas of a machine. The theory behind predictive maintenance programs is to predict failures in order to reduce downtime costs. This way parts can be ordered and replaced on scheduled downtime without interrupting production.

Note: Vibration analysis is only effective as a trend analysis tool. It must be part of a thoroughly planned program that establishes "norms" for each individual piece of equipment. Significant variations from these norms may then point to a problem. The problems must then be sized accordingly; does something need to be replaced, does it just need to be greased or adjusted? The "norms" must be well established in order to recognize an abnormal condition.

The following tables show the Vibration Frequency Coefficients.

Rex Roller Bearing Vibration Frequency Coefficients

Size Code	Roller Diameter (in)	Number of Rollers/Row	Pitch Diameter (in)	Contact Angle (deg)	RSF Roller Spin	FTF Fundamental Train	RPFI Inner Ring Defect	RPFO Outer Ring Defect	RDF Roller Defect
2	0.347	13	1.754	18.833	0.0406	0.0068	0.1286	0.0880	0.0812
3	0.378	13	1.987	17.767	0.0424	0.0068	0.1280	0.0887	0.0847
4	0.354	15	2.173	16.317	0.0499	0.0070	0.1445	0.1055	0.0998
5	0.445	14	2.559	16.633	0.0466	0.0069	0.1361	0.0972	0.0932
6	0.408	17	2.796	14.983	0.0559	0.0072	0.1617	0.1217	0.1118
7	0.424	19	3.135	15.000	0.0606	0.0072	0.1790	0.1377	0.1211
8	0.467	19	3.459	14.050	0.0607	0.0072	0.1791	0.1376	0.1214
9	0.559	18	4.035	14.117	0.0591	0.0072	0.1701	0.1299	0.1182
10	0.615	19	4.711	14.300	0.0628	0.0073	0.1784	0.1383	0.1255
11	0.822	18	5.519	13.467	0.0548	0.0071	0.1717	0.1283	0.1095
12	0.874	20	6.077	12.583	0.0568	0.0072	0.1901	0.1433	0.1136
13	1.114	18	7.048	13.950	0.0515	0.0071	0.1730	0.1270	0.1030
14	1.386	16	8.113	14.167	0.0475	0.0070	0.1554	0.1113	0.0951
15	1.414	17	8.843	13.133	0.0509	0.0070	0.1637	0.1196	0.1017
16	1.535	18	9.823	12.250	0.0521	0.0071	0.1729	0.1271	0.1042

* There are two rows per bearing

* Table coefficient values multiplied by speed = hertz (cps) or HZ value X 60 = cycles per minute (cpm) frequency value

Link-Belt Roller Bearing Vibration Frequency Coefficients

Size Code	Roller Diameter (in)	Number of Rollers/Row	Pitch Diameter (in)	Contact Angle (deg)	RSF Roller Spin	FTF Fundamental Train	RPFI Inner Ring Defect	RPFO Outer Ring Defect	RDF Roller Defect
B416	0.347	13	1.753	18.833	0.0406	0.0068	0.1286	0.0880	0.0812
B420	0.378	13	1.986	17.767	0.0424	0.0068	0.1280	0.0887	0.0847
B424 B524 B624	0.354	15	2.172	16.317	0.0499	0.0070	0.1445	0.1055	0.0998
B428 B528	0.445	14	2.558	16.633	0.0466	0.0069	0.1361	0.0972	0.0932
B432 B531 B631	0.408	17	2.794	14.983	0.0559	0.0072	0.1617	0.1217	0.1118
B436 B536 B635	0.424	19	3.134	15.000	0.0606	0.0072	0.1790	0.1377	0.1211
B440 B540 B639	0.467	19	3.457	14.050	0.0607	0.0072	0.1791	0.1376	0.1214
B448 B548 B647	0.559	18	4.034	14.117	0.0591	0.0072	0.1701	0.1299	0.1182
B456 B556 B655	0.615	19	4.709	14.300	0.0628	0.0071	0.1784	0.1383	0.1255
B464 B564 B663	0.822	18	5.517	13.467	0.0548	0.0070	0.1717	0.1283	0.1095
B572 B671	0.874	20	6.077	12.583	0.0568	0.0072	0.1901	0.1433	0.1136
B580 B679	1.114	18	7.047	13.950	0.0515	0.0071	0.1730	0.1270	0.1030

* There are two rows per bearing

* Table coefficient values multiplied by speed = hertz (cps) or HZ value X 60 = cycles per minute (cpm) frequency value

Link-Belt Heavy Duty Ball Bearing Vibration Frequency Coefficients

Size Code	Ball Diameter (in)	Number of Balls	Pitch Diameter (in)	BSF Ball Spin	FTF Fundamental Train	BPFI Inner Ring Defect	BPFO Outer Ring Defect	BDF Ball Defect
312	0.3750	7	1.4173	0.0293	0.0062	0.0738	0.0428	0.0585
316	0.4375	7	1.7126	0.0305	0.0062	0.0732	0.0435	0.0610
319	0.4874	8	2.0079	0.0325	0.0063	0.0827	0.0507	0.0650
323	0.5313	8	2.2638	0.0335	0.0063	0.0823	0.0510	0.0672
324	0.5938	8	2.5591	0.0340	0.0063	0.0822	0.0512	0.0680
328	0.6875	8	2.8543	0.0327	0.0063	0.0827	0.0507	0.0652
331	0.7500	8	3.1496	0.0330	0.0063	0.0825	0.0508	0.0660
335	0.8125	8	3.4440	0.0333	0.0063	0.0823	0.0510	0.0667
339	0.8750	8	3.7402	0.0337	0.0063	0.0823	0.0510	0.0673
344	1.0000	8	4.3307	0.0342	0.0063	0.0820	0.0513	0.0683
347	1.0625	8	4.6260	0.0343	0.0065	0.0820	0.0513	0.0687
351	1.1250	8	4.9213	0.0345	0.0065	0.0818	0.0515	0.0692
356	1.2500	8	5.5118	0.0348	0.0065	0.0818	0.0515	0.0697
363	1.4375	8	6.2008	0.0340	0.0065	0.0817	0.0516	0.0680

* Table coefficient values multiplied by speed = hertz (cps) or HZ value X 60 = cycles per minute (cpm) frequency value

Link-Belt 6800 & 6600 Series Roller Bearing Vibration Frequency Coefficients

Size Code	RSF Roller Spin	FTF Fundamental Train	RPFI Inner Ring Defect	RPFO Outer Ring Defect
22209	0.0497	0.0070	0.1640	0.1188
22210	0.0530	0.0071	0.1730	0.1272
22211	0.0553	0.0071	0.1810	0.1352
22213	0.0523	0.0071	0.1730	0.1269
22215	0.0591	0.0072	0.1890	0.1438
22216	0.0553	0.0071	0.1810	0.1352
22217	0.0523	0.0071	0.1730	0.1269
22218	0.0524	0.0071	0.1730	0.1269
22220	0.0522	0.0071	0.1730	0.1269
22222	0.0493	0.0069	0.1650	0.1186
22224	0.0522	0.0071	0.1730	0.1269
22226	0.0524	0.0071	0.1730	0.1270
22228	0.0523	0.0071	0.1730	0.1269
22230	0.0522	0.0071	0.1730	0.1269
22232	0.0523	0.0071	0.1730	0.1269
22234	0.0492	0.0070	0.1650	0.1186
22236	0.0523	0.0071	0.1730	0.1269
22238	0.0573	0.0072	0.1900	0.1433
22240	0.0557	0.0071	0.1811	0.1356
22244	0.0540	0.0071	0.1818	0.1349
23048	0.0857	0.0075	0.2645	0.2187
23056	0.0826	0.0075	0.2563	0.2103

* There are two rows per bearing

* Table coefficient values multiplied by speed = hertz (cps) or HZ value X 60 = cycles per minute (cpm) frequency value

Link-Belt Ball Bearing Vibration Frequency Coefficients

Size Code	Ball Diameter (in)	Number of Balls	Pitch Diameter (in)	BSF Ball Spin	FTF Fundamental Train	BPFI Inner Ring Defect	BPFO Outer Ring Defect	BDF Ball Defect
203	0.2969	7	1.1220	0.0293	0.0062	0.0738	0.0428	0.0585
204	0.3125	8	1.3189	0.0332	0.0063	0.0825	0.0508	0.0633
205	0.3125	9	1.5157	0.0387	0.0067	0.0905	0.0595	0.0775
206	0.3750	9	1.8110	0.0385	0.0067	0.0905	0.0595	0.0770
207	0.4375	9	2.1063	0.0383	0.0067	0.0905	0.0595	0.0768
208	0.4688	9	2.3622	0.0367	0.0065	0.0912	0.0588	0.0733
209	0.5000	9	2.5590	0.0377	0.0065	0.0908	0.0592	0.0752
210	0.5000	10	2.7559	0.0445	0.0068	0.0985	0.0682	0.0888
211	0.5625	10	3.0512	0.0437	0.0068	0.0987	0.0680	0.0873
212	0.6250	10	3.3464	0.0430	0.0068	0.0988	0.0678	0.0862
213	0.6563	10	3.6417	0.0447	0.0068	0.0983	0.0683	0.0895
214	0.6563	10	3.6417	0.0451	0.0068	0.0982	0.0684	0.0903
215	0.6875	11	4.0354	0.0475	0.0068	0.1073	0.0760	0.0950
216	0.7813	11	4.6260	0.0470	0.0069	0.1074	0.0759	0.0941
217	0.7813	11	4.6260	0.0480	0.0070	0.1072	0.0762	0.0958
218	1.0000	10	5.5118	0.0454	0.0069	0.0981	0.0685	0.0908
220	1.0000	10	5.5118	0.0445	0.0068	0.0985	0.0682	0.0888

* Table coefficient values multiplied by speed = hertz (cps) or HZ value X 60 = cycles per minute (cpm) frequency value

Shaft Size Tolerance

A snug fit-up between shaft and bearing inner race is required for proper bearing performance. In fact, a press fit is necessary to obtain full basic dynamic capacity. As application conditions and requirements vary, fit-up and mounting requirements change as well.

A slip fit mounting in accordance with the shaft tolerances shown in the tables below will provide generally acceptable service life on normal applications under light to moderate load and speed conditions. A shaft tolerance resulting in looser fits (such as commercial grade shafting) may be expected to have greatly reduced reliability and increasing problems of shaft fret wear, bearing inner ring fracture and shaft slippage. In general, looser fits than recommended are feasible only for very light loading and lower speeds.

Shafting should be designed for adequate strength and stiffness for the intended application. It should be round, straight, free of nicks and burrs and of correct size.

If a special tolerance shaft is to be used, consideration should be given to the use of a precision tolerance bearing, particularly in the case of severe loading or high speed applications to obtain optimum bearing performance.

The tables below list shaft size tolerance information for various types of mounting and application conditions.

Recommended Roller Bearing Shaft Tolerance Table

Shaft Diameter	Recommended Shaft Tolerances	
	Setscrew Mounted	Adapter Mounted
thru 2"	+.0000" to -.0005"	+.000" to -.003"
2 1/16" to 4"	+.0000" to -.0010"	+.000" to -.004"
4 1/16" to 6"	+.0000" to -.0015"	+.000" to -.005"
6 1/16" to 13"	+.0000" to -.0015"	+.000" to -.006"
17mm to 50mm	+.000mm to -.013mm	+.00mm to -.07mm
55mm to 100mm	+.000mm to -.025mm	+.00mm to -.10mm
105mm to 150mm	+.000mm to -.038mm	+.00mm to -.13mm
155mm to 330mm	-	+.00mm to -.15mm

Recommended Ball Bearing Shaft Tolerance Table

Shaft Diameter	Recommended Shaft Tolerances		
	Setscrew Mounted	Adapter Mounted	Centrik-Lok
thru 2"	+.0000" to -.0005"	+.000" to -.003"	+.000" -.003"
2 1/16" to 4"	+.0000" to -.0010"	+.000" to -.004"	+.000" -.004"
17mm to 50mm	+.000mm to -.013mm	-	-
55mm to 100mm	+.000mm to -.025mm	-	-

Recommended Sleeve Bearing Shaft Tolerance Table

Shaft Diameter	Recommended Shaft Tolerances
thru 2"	+.000" to -.003"
2 1/16" to 4"	+.000" to -.004"
4 1/16" to 6"	+.000" to -.005"
6 1/16" to 13"	+.000" to -.006"

Recommended Setscrew Torque Values

Proper tightening torque can be found in the below tables. Achieving these values will distort the set collars and spring load the setscrews to prevent their loosening during operation. If an Allen wrench is used as the torque wrench, place length of pipe over long end and pull until wrench begins to twist.

The axial load capacities listed in the below tables are for knurled cup setscrews having 90° spacing, tightened to recommended torque range on a shaft seat not harder than 35 Rockwell C. The axial load values may be used in design, as a safety factor has been applied.

The setscrew torque values and allowable axial loads are applicable to Rexnord Bearing products only. These values can not be applied to bearings manufactured by other vendors having different setscrew spacing, different type of setscrews and/or different size setscrews.

Rexnord Roller Bearing Seating Torque

Setscrew Size (in)	2000	3000	5000	Setscrew Torque Range (in-lb)	Axial Load Capacity 2000 & 3000 (lb)	Axial Load Capacity 5000 (lb)
5/16	2012-2104	3107		185	500	
3/8	2107-2200	3111-3115	5107-5115	325	650	1300
7/16	2203-2204	3203-3315	5200-5203	460	825	1650
1/2	2206-2308	3207-3308	5207-5307	680	990	1980
5/8	2311-2400	3315	5311-5507	1350	1320	2640
3/4			5515-5700	1600	1650	3300

Link-Belt Roller Bearing Seating Torque

Setscrew Size (in)	B22400	B22500	Setscrew Torque Range (in-lb)	Axial Load Capacity B22400 (lb)	Axial Load Capacity B22500 (lb)
5/16	B22412-420		185	500	
3/8	B22423-432	B22523-531	325	650	1300
7/16	B22435-436	B22532-535	460	825	1650
1/2	B22439-456	B22536-556	680	990	1980
5/8	B22459-464	B22559-580	1350	1320	2640

Link-Belt Ball Bearing Seating Torque

Setscrew Size (in)	Y200/W200 Eccentric Lock	U200 Setscrew	S200 Setscrew	U300 Setscrew	Setscrew Torque Range (in-lb)	Axial Load Capacity (lb)
#10		2B08-211	2B08-211	312	33-40	175
1/4	2B08-216	212-2E20	212-216	314-316	87-92	330
5/16	217-2E20	220-228	217-228	318-324	165-185	500
3/8	220-2E32	230-239	230-256	326-331	290-325	650
7/16	232-239	240-243		332-339	430-460	825
1/2		244-2E56		343-347	620-680	990
5/8		263-2E64		348-356	1225-1350	1320
3/4				363	2125-2350	1650

Setscrew Size (in)	CL200 Centrik-Lok	M_CL200 Centrik-Lok	Setscrew Torque Range (in-lb)
#10	212-2E20	216	65-72
1/4	220-228	219-224	151-168
5/16	230-239	227-235	313-348
3/8	240-2E64	239-256	540-600

Introduction to Load Ratings

The values shown in the Radial Load Rating Tables are used to select the most economical bearing capable of sustaining the required speed and load for the desired life. Do not depend entirely on the rated capacity to judge how well the complete mounted unit will perform. Environmental and maintenance conditions can detract from this performance. The realistic approach to mounted bearing application is to consider "theoretical" rated capacity of the base bearing plus the housing design, seals, method of securing to shaft, lubrication, etc., as they effect the desired life expectancy and the economics of overall equipment design.

Basis of Load Ratings

The Anti-Friction Bearing Manufacturer's Association (AFBMA), recommends the use of a standard formula for determining the basic rating of anti-friction bearings. The use of the formula determines the rating for any given bearing and is based upon failure from surface contact fatigue of the roller or race material.

The AFBMA Basic Load Rating definition may be thought of as having two basic principles involved; one being of a physical nature relating to a load carrying ability (Basic Load Rating) and the other taking into consideration failure level or probability of bearing survival (Rating Life).

The definitions of these principles are:

1. The "Basic Load Rating" of a bearing is that consistent stationary equivalent radial load which a group of apparently identical roller bearings with stationary outer ring can endure for one million revolutions of the inner ring.
2. The "Rating Life" of a group of apparently identical bearings is defined as "the number of revolutions that 90% of a group of bearings will complete or exceed before first evidence of fatigue develops." This is often referred to as L_{10} or B-10 Life.

C Rating

The common industry term "C" Rating inter-relates these two rating conditions. The "C" Rating is defined as "the equivalent radial load which may be imposed on the bearings to give an L_{10} (B-10) life of one million revolutions" (500 hours at 33 1/3 rpm). The "C" Rating is calculated from an empirical formula based on size and geometry. The empirical relationship is based on assumptions in several important areas; i.e., press fit mounting to shaft, adequate mineral oil lubrication, no misalignment, uniform loading, moderate speed and temperature, absolute cleanliness, etc. While it would appear logical that all bearings of identical geometry, dimensions and material should produce identical results under identical conditions, in reality, due to variations within specified tolerances of material and manufacturing, failures will occur at random periods of life. Ideally these failures should still result from metal fatigue rather than physical wear of the components. The "C" Rating can be expanded into combinations of load and speed to life hours by utilizing specified load-life relationships. These may then be referred to as the capacity ratings for any speed and life hours with the implied "L_{10}" survival probability consideration. This load rating for a given life condition is often termed Capacity Rating Or Rated Capacity and are shown in the Load Rating Tables in the front of each section.

Co Rating

The Basic Static Capacity (Co) is that amount of radial or equivalent radial load that can be imposed on a non-rotating bearing without producing excessive brinelling. This rating applies to the performance of the internal parts of the roller bearing. For the vast majority of applications, a bearing can be run normally after sustaining a static load of Co. First fracture of primary race components does not occur until well above the Co Rating. Co does not necessarily represent static strength of the housing or structure in which the bearing is mounted.

Conditions Affecting Rated Life

When the bearings are mounted in commercial housings and offered as a "package" to the user it should then be understood that the values shown in the catalog Load Rating Tables apply only to the base bearing under laboratory conditions. Common application factors which have an adverse effect on rated life are:

1 - Improper mounting (alignments, fit up to shaft)

2 - Contamination by abrasive or corrosive material

3 - Non-uniform load or vibration

4 - Inadequate or improper lubrication

5 - Excessive temperature or temperature change

6 - Excessive speed

The base bearing when mounted in a commercial housing frequently fails from other causes before it reaches the theoretical basis for the rated life. Thus, selection of housing style, seal type, mounting method, specific lubricant, etc., must also be considered to optimize life on the actual application.

Adjusted Rating Life

While actual results or "usable" bearing life is the primary interest of both those who design and those who utilize bearings, a great many factors impact the translation of "theoretical" rated capacity into actual performance. Once the theoretical bearing L_{10} life has been calculated, it can be adjusted for higher reliability, special bearing material properties, and/or operating condition effects on lubrication. Detailed information can be obtained from the Rexnord Engineering Department.

Theoretical Bearing L_{10} Life Calculation

While bearings are usually selected on the basis of capacity, there are occasions when they are selected based on calculated L_{10} life. The L_{10} life is defined as the number of revolutions (or hours) that 90% of a group of bearings will meet or exceed before evidence of raceway spalling fatigue occurs. The L_{10} life can be calculated using the following empirical formula:

Roller Bearing:

$$L_{10} = \frac{1 \times 10^6}{60 \times RPM} \left(\frac{C}{Pe}\right)^{10/3} = \text{Life in Hours}$$

Ball Bearing:

$$L_{10} = \frac{1 \times 10^6}{60 \times RPM} \left(\frac{C}{P}\right)^{3} = \text{Life in Hours}$$

where C = C Rating

Pe = Equivalent Radial Load or Required Radial Capacity

The basic dynamic load ratings, C, in this catalog have been increased significantly compared to previous values. Improved surface characteristics have been produced primarily by improving manufacturing and measuring techniques for the race surfaces. Along with the capability to rotate under higher loads, the static load ratings, Co, have also been increased.

With the larger load ratings it may be possible to use smaller bearings (size code) for a given application. Caution is advised in such cases to consider the strength of the shaft and housing—especially when the applied load is not aimed directly into the machined mounting surface.

Bearing Selection

Optimum bearing performance is the result of selecting the bearing and the shaft to suit the particular application. Bearing size is often controlled by a shaft size selection, based on shaft bending and torsional stresses. In other applications, bearing load capacity is the determining design factor. In either case, the selection procedure outlined below is used to determine the bearing capacity required to meet the application requirements.

Bearing Selection Procedure

This procedure involves conversion of all forces and conditions into one resultant equivalent radial load on each bearing and utilization of the bearing load rating table.

STEP 1.

Determine all forces acting on the bearings. The following types of loading must be considered.

A. Static loads - weight of shaft assembly and other equipment supported by the bearings. (When these are small in relation to applied loads they are often disregarded).

B. Applied loads - forces applied on shaft during normal function of equipment and are determined prior to bearing selection.

C. Drive loads - forces transmitted from power source to the shaft through belts, chains, gears, etc. (see Drive Load).

D. Eccentric loads - centripetal force due to a designed unbalanced load rotating with shaft (see Eccentric Loads).

STEP 2.

Resolve the radial forces acting on the shaft into radial loads on each bearing. (See Translation of Shaft Forces into Bearing Loads)

STEP 3.

Combine the radial forces vertically to obtain a resultant radial load (Pr) at each bearing (see combining radial loads).

STEP 4.

Add or subtract all thrust forces (if any) to determine the total thrust load (P_t) acting on the shaft. Assume this thrust load is acting at the bearing with the greatest radial load (P_r).

STEP 5.

Calculate the equivalent radial load (P_e) using the applicable thrust formula. If no thrust is present, then $P_e = P_r$. (See selection guides)

STEP 6.

Apply the modification factors (M) and obtain a required radial capacity (P) to reflect actual application conditions. (See Load Modification Factors)

P = Pe x M

STEP 7.

Select a bearing size from the load rating table at the front of each section. Use the largest calculated Required Radial Capacity value (P) and the application speed and life requirements in making the optimum selection. Usually, a single set collar bearing provides an adequate, economic selection. However, in applications involving shock and vibration, increased rigidity, or when shaft locking or housing strength is desired, a double set or adapter mount unit should be specified.

NOTE: If bearing selection has been made without consideration of shaft strength, shaft size (as indicated by bearing bore) should be checked.

Applied Loads

Each shaft performs a basic work function in a system, regardless of the type or style of equipment. The forces relating to this work function normally represent the primary load on the shaft and are most accurately determined by those responsible for total equipment design. When this load information is supplied, these loads are combined with other loadings to determine a bearing selection.

Radial Loads

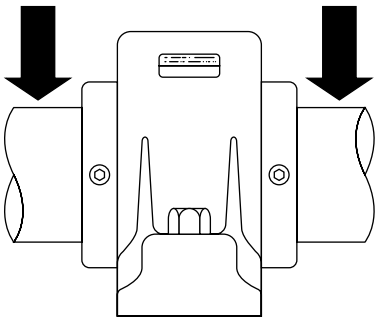

Drive Loads

To determine the radial force on a shaft from a belt or chain drive where the horsepower being transmitted is known, the following formula should be used:

$$F = \frac{HP \times 126{,}000 \times K}{PD \times RPM} \qquad \text{Formula (1)}$$

Where:

F -	Radial Force on Shaft
HP -	Horsepower transmitted
PD -	Pulley diameter or pitch diameter of sprocket or sheave in inches
RPM -	Revolutions per minute
K -	See Drive Tension Factors (below)
126,000 -	A constant for conversion of horsepower, speed and pulley diameter to radial pounds of force

Drive Tension Factors - K:

While subject to considerable variations due to different installation and maintenance practice, the following Drive Tension Factors "K" are recommended for normal applications:

"K" Factors

Type of Drive	Normal Tension	4 or more V-belts, Tight Belts, Short Centers, High Ratios
Chain	1	1
V-velts (1 to 3 belts)	1.5	2
Flat Belts	2	3

Eccentric Loads

An unbalanced shaft generates a centripetal force which acts radially on the shaft per the following formula:

C.F. = .000028 x r x W x (RPM)2 — Formula (2)

C.F. =	Centripetal Force (Lbs.)
r =	Radius of rotation of unbalanced load in inches
W =	Weight of unbalanced load in lbs.
RPM =	Revolutions per minute

Since the centripetal force varies in direction it should be added to the maximum combined load from other sources. A modification factor (see Load Modification Factors) must also be included on this type loading.

Bearing Selection

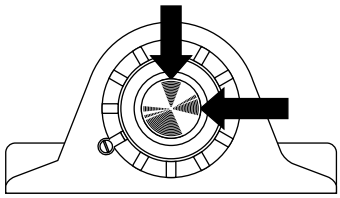

Translation of Shaft Forces into Bearing Loads

Any radial force (F) can be resolved into individual loads on each bearing. The amount of load supported by each bearing is determined from the summation of moments using the following formulas:

When the load (F) is between supports, it produces bearing loads (Fa, Fb) in same direction on both bearings (A & B), and equal to the applied load. (F = Fa + Fb).

An overhung load produces a bearing load (Fa) in the opposite direction of the far bearing (A); and since a lever arm is involved, the magnitude of load (Fb) on nearest bearing (B) will be greater than the overhung load (F), by the amount of load (Fa) on far bearing (A). (F = Fb - Fa).

$$Fa = \frac{F \times e}{c} \qquad \text{Formula (3)}$$

$$Fb = \frac{F \times d}{c} \qquad \text{Formula (4)}$$

Note Direction of Forces Fa, Fb

F -	Force on shaft required to transmit power and or other radial forces acting on shaft from one point
Fa -	Radial force on bearing “A”
Fb -	Radial force on bearing “B”
c -	Distance between bearing centerlines in inches
d -	Distance between centerline of bearing “A” and force “F” in inches
e -	Distance between centerline of bearing “B” and force “F” in inches

Combining Radial Loads

Typical applications involve both an applied load and a drive load. Normal Engineering Procedure would be to treat each load source separately, but to ultimately combine these loads as shown below:

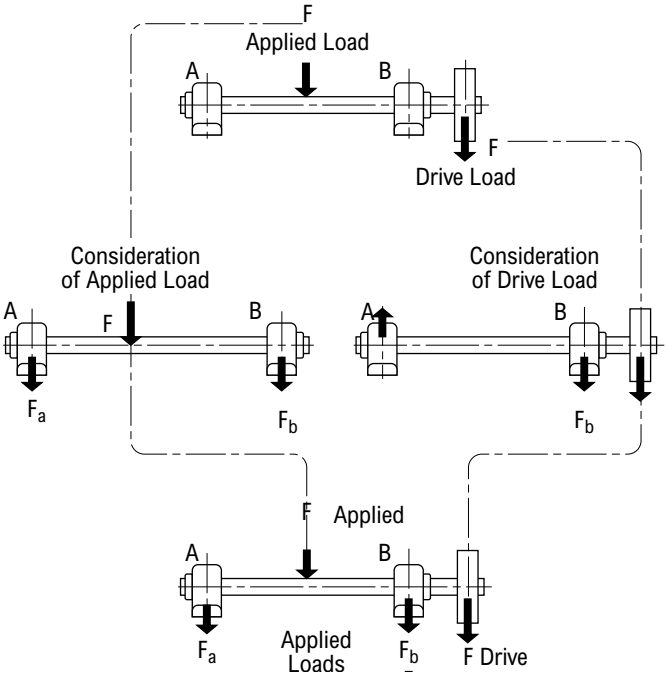

In applications where all loads are in the same plane, the forces can be added or subtracted. However, in most applications, all radial forces are not in the same direction. Where two or more radial forces are not in the same plane, these forces should be changed to vertical and horizontal components as shown by the following formula:

$$Fv = \text{Force } F \ \text{Sine} \angle \qquad \text{Formula (5)}$$

$$Fh = \text{Force } F \ \text{Cos} \angle \qquad \text{Formula (6)}$$

Where:

Fv =	Vertical component in lbs.
Fh =	Horizontal component in lbs.
Sine ∠ =	Sine of angle between force “F” and horizontal
Cos ∠ =	Cos of angle between force “F” and horizontal

These horizontal and vertical components are combined to obtain a net horizontal force (Prh) and a net vertical force (Prv). The resultant radial force on a bearing is determined as follows:

$$P_r = \sqrt{P_{rv}^2 + P_{rh}^2} \qquad \text{Formula (7)}$$

Where:

P_r =	Resultant radial load
P_{rv} =	Total vertical radial load
P_{rh} =	Total horizontal radial load

Resultant radial loads (P_r) can also be determined graphically, using vectors representing both size and direction of imposed loads.

Bearing Selection

Pure Thrust Loads

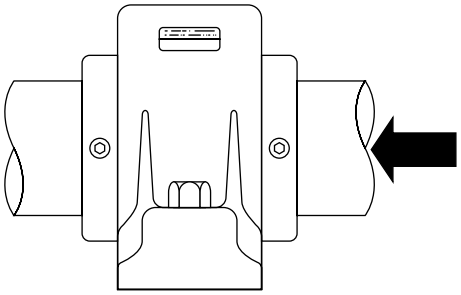

Centrifugal pumps, propellers, drilling equipment, vertical shafts and screw conveyors represent types of equipment where one of the bearings supporting the shaft may be required to take primarily thrust loads. Rex units are capable of taking thrust loads in either direction.

Thrust load ratings for units may be obtained as follows:

$$\text{Thrust Rating} = \frac{\text{Catalog Radial Load Rating}}{\text{Maximum Thrust Factor}}$$

The "Thrust Rating" is the maximum thrust load a bearing can withstand at the selected RPM and L_{10} Life.

NOTE: Assume thrust load is supported by one bearing only. High thrust loads require special shaft and mounting considerations. Installation must also be considered to assure maximum performance.

Combined Radial and Thrust Loads

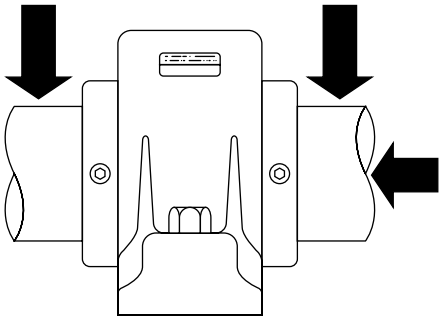

In many applications such as, helical, bevel or spiral-bevel gears the bearings are required to carry combined radial and thrust loads. Rex Bearings are in effect two single-row angular contact bearings having a common inner race with a spherical surface. They are, therefore, capable of carrying both radial and thrust loads in either direction.

For purposes of selection, it is always advisable to assume that, if any thrust loading is present, it is carried by the bearing with the heaviest radial load. (In most applications it is almost impossible to split a thrust load between two or more bearings. Also, unless floating units are used, it is difficult to mount bearings so that only one specific bearing carries all the thrust load imposed on a shaft.)

When both thrust and radial loads are involved, the formulas in the Thrust Table are used. The formula combine both loads into an equivalent radial load for which a bearing may be selected from the Load Rating Table. The correct formula is selected based upon size of the unit and percentage of thrust to radial load involved.

Equivalent Radial Load

When selecting a bearing for an application involving thrust loading, a shaft size range must be determined or estimated and bearing series decided to obtain a formula from the Thrust Table below. When a specific bearing has been selected from the Radial Load Rating Table as a result of the use of this formula from the Thrust Table, and its shaft size or style is outside the range of the original formula, the selection is not valid and the equivalent radial load (Pe) must be recalculated using the new formula related to that shaft size and bearing series.

Load Modification Factors

Normal calculations of bearing loads do not take into consideration special load conditions such as oscillatory, shock, or variable loads. To take such conditions into account, load modification factors are applied to the calculated load. These factors, whether termed load modification factors, application factors, or service factors, are all intended to allow extra bearing capacity to offset inordinate loading conditions.

Since factor selection is always a matter of judgement, even personnel experienced in bearing selection and application vary in their assessment of factors for individual application conditions.

The factors listed below are intended only as a general guide and may be adjusted for particular situations.

Oscillatory Loads

Some bearing applications involve shaft oscillation instead of complete rotation. The table below lists the M factors corresponding to the maximum included angle of oscillation. The applied load is multiplied by this M factor to determine the equivalent radial load. When using the load rating tables, the vertical column headings represent cycles per minute instead of RPM.

Basic failure mode changes at oscillation angles below 30° - consult Rexnord.

Oscillation Factors

φ	30	60	90	120	150	180
M	.58	.72	.81	.89	.95	1.00

φ = Included oscillation angle - degrees

M = Modifying factor.

Shock Loads

Shock is an actual dynamic load on the bearing. Consequently capacity must be allocated to handle shock loading in addition to the basic dynamic loading normally calculated or analyzed in an application.

Shock Factors

Operating Condition	Frequency Overload		
	Occasional 33%	Frequent 67%	Continuous 100%
No Shock	1.00	1.00	1.00
Light Shock	1.14	1.24	1.33
Moderate Shock	1.32	1.52	1.67
Heavy Shock or Extreme Vibration	1.52	1.80	2.00

Resultant Load

The Resultant Radial Load Pr or Equivalent Radial Load Pe multiplied by selected Modifying Factors will give the Required Radial Capacity P in terms of catalog load rating tables.

For Radial Load Only:

$$P = P_r \times M \qquad \text{Formula (9)}$$

For combined Radial and Thrust Loads as well as Thrust Loads:

$$P = P_e \; M \qquad \text{Formula (10)}$$

If safety factors or other allowances have been included in the initial bearing loads to reflect application conditions, then do not duplicate those factors from the following table to avoid exaggerating bearing loads. In case two or more factors are involved, the values should be multiplied together to obtain the combined "M" Factor.

Variable Loads

In many cases, a bearing is subjected to varying loads and speeds.

The following formula calculates the equivalent load on the bearing when this occurs.

$$P_e = \sqrt[3.33]{\frac{P_1^{3.33}n_1t_1 + P_2^{3.33}n_2t_2 + \ldots P_n^{3.33}n_nt_n}{N}} \qquad \text{Formula (11)}$$

where P_1, P_2, P_n are the loads (in lbf) acting at speeds n_1, n_2, n_n (in rpm)

t_1, t_2, t_n are the durations (in decimal percentage) of each load and speed

$N = t_1n_1 + t_2n_2 + \ldots t_nn_n$

For cases where the load is variable but the speed is constant, the following simplified formula is used:

$$P_e = \sqrt[3.33]{P_1^{3.33}t_1 + P_2^{3.33}t_2 + \ldots P_n^{3.33}t_n} \qquad \text{Formula (12)}$$

When the load varies from a minumum to a maximum load and is a continuous and gradual change, the equivalent load is calculated using the following formula:

$$P_e = \frac{P_{min} + 2P_{max}}{3} \qquad \text{Formula (13)}$$

For calculations of more complex loading conditions, consult the Rexnord Bearing Engineering Department.

Application Example

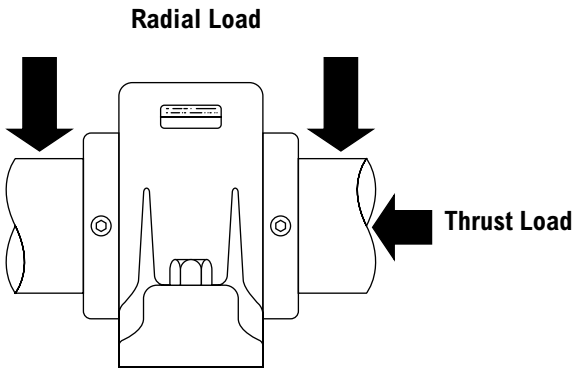

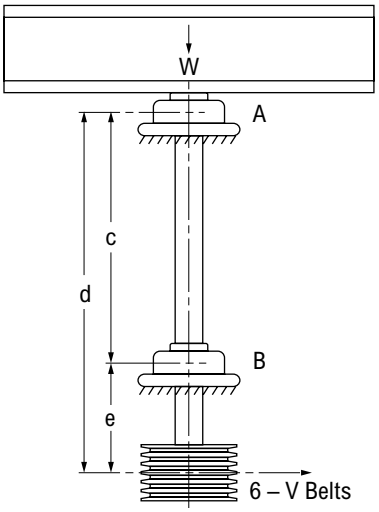

Determine the Flange Block Requirements for the Mixing Tub as shown:

Operating Data	Symbol	Value
Wt. of mixing tub and load	W	2400 lbs.
Horsepower	HP	10
Speed	RPM	200
"K" Factor	K	2
Sheave Pitch Dia.	PD	14"
Bearing "A" to "B"	c	24"
Bearing "A" to Sheave	d	32"
Bearing "B" to Sheave	e	8"
L-10 Life required	-	15,000 Hrs.

Radial force on shaft from V-Belt drive (F) is calculated by using formula (1),

$$F = \frac{HP \times 126{,}000 \times K}{PD \times RPM} = \frac{10 \times 126{,}000 \times 2}{14 \times 200} = 900 \text{ lbs.}$$

F1 load from drive, will produce radial loads on bearings "A" and "B." These radial loads are determined by using formulae (3) and (4)

Bearing "A"

$$Fa = \frac{F \times e}{c} = \frac{900 \times 8}{24} = 300 \text{ lbs.}$$

$$Fb = \frac{F \times d}{c} = \frac{900 \times 32}{24} = 1200 \text{ lbs.}$$

A bearing selection is made based upon bearing "B" because it carries the greater radial load. The total thrust load, 2400 lbs. from the weight of the mixing tub and load, should also be considered as acting on that bearing.

The thrust and radial loads are combined to an equivalent radial load by selecting the proper X, Y Factors in the Bearing Selection Guide.

In this case use:

$$P_e = .67\ P_r + 2.60\ P_t = .67\ (1200) + 2.60\ (2400)$$
$$= 804 + 6240 = 7044$$

Referring to the Rexnord Roller Bearing Radial Load Rating Table, a size code 9 bearing has a rating of 9855 lbs. at 200 rpm and 15,000 hours life. Using the derating factor at the bottom of the table, a Normal Duty 2211 bearing has a rating of (1-.15) x 9855 = 8377 lbs. This exceeds the 7044 lbs. of equivalent radial load that was calculated so the 2211 is satisfactory. Therefore, a ZB2211 Normal Duty Flange Block would be selected. Using the formula and C, the bearings L_{10} life would be:

$$L_{10} = \frac{1 \times 10^6}{60 \times 200} \left[\frac{46{,}800 \times .85}{7044} \right]^{10/3} = 26{,}728 \text{ hours}$$

Application Example - Chain and Belt Drives

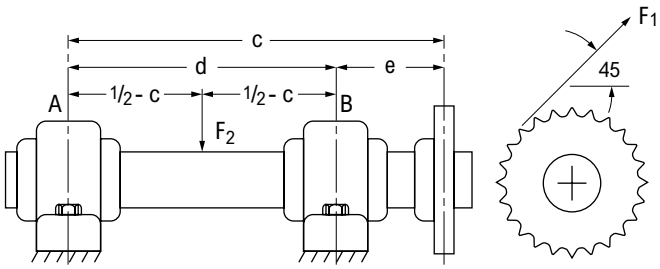

Determine the pillow block requirements for the application shown below:

Operating Data	Symbol	Value
Load from drive	F1	1200 lbs.
Dead load on shaft	F2	1000 lbs.
Speed	RPM	1000
L_{10} Life required	-	15,000 Hrs.
Bearing "A" to "B"	c	90"
Bearing "A" to sprocket	d	100"
Bearing "B" to sprocket	e	10"
Sin 45°		.707
Cos 45°		.707

Radial load on bearings consist of two parts: from the dead load and from the drive. Because these loads act in different directions, they will have to be combined by using formula 5, 6 and 7.

Bearing "A"

Load from weight in center of shaft:

$F_{2a} = \frac{1000}{2} =$ 500 lbs. because weight is centered between both bearings. Load is downward.

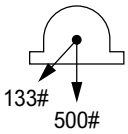

Load from drive:

$F_{1a} = \frac{F_1 \times e}{c} = \frac{1200 \times 10}{90} = 133$ lbs at 45° downward

To combine the loads, the 133 lb. load must be broken up into vertical and horizontal loads.

$F_v = F_{1a} \times \sin 45^\circ = 133 \times .707 = 94$ lb. vertical downward

$F_h = F_{1a} \times \cos 45^\circ = 133 \times .707 = 94$ lb. horizontal

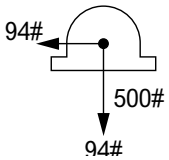

Total Downward 594#

Now combine the total downward load and horizontal load.

$P_r = \sqrt{(94)^2 + (594)^2} = 602$ lbs. radial load on "A"

Combined Radial Loads

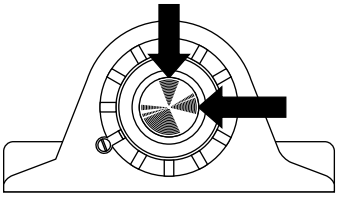

Bearing "B"

Load from weight in center of shaft:

$F_{2b} = \frac{1000}{2} = 500$ lbs. downward

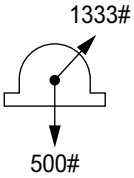

Load from drive:

$F_{1b} = \frac{F_1 \times d}{c} = \frac{1200 \times 100}{90} = 1333$ lbs. at 45° upward

Now break up the 1333 lb. load into horizontal and vertical loads: $F_v = F_{1b} \times \sin 45° = 1333 \times .707 = 944$ lbs. vertical upward

$F_h = F_{1b} \times \cos 45° = 1333 \times .707 = 944$ lbs. horizontal

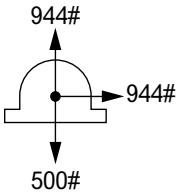

Total vertical load = 444# upward

Now combining the total upward load and horizontal load

$P_r = \sqrt{(444)^2 + (944)^2} = 1042$ lbs. radial load on "B"

Bearing selection will be based on Bearing "B" because it has the highest load of the two bearings. Referring to the Rexnord Roller Bearing Radial Load Rating Table, a size code 3 bearing has a rating of 1858 lbs. at 1000 rpm and 15,000 hours life. Using the derating factor at the bottom of the table, a Normal Duty 2102 bearing has a rating of (1-.15) X 1858 = 1579 lbs. This exceeds the 1042 lbs. of equivalent radial load that was calculated for Bearing "B" so the 2102 is satisfactory. Therefore, a ZA2102 Normal Duty Pillow Block would be selected.

Using the formula and the C Rating, the bearings L_{10} life would be:

$$L_{10} = \frac{1 \times 10^6}{60 \times 1000} \left[\frac{14{,}300 \times .85}{1042}\right]^{10/3} = 59{,}949 \text{ hours}$$

Application Example - Chain and Belt Drives

Determine the pillow block requirements for the jack shaft driven by a chain sprocket and power take-off through a 4-V Belt Sheave as shown:

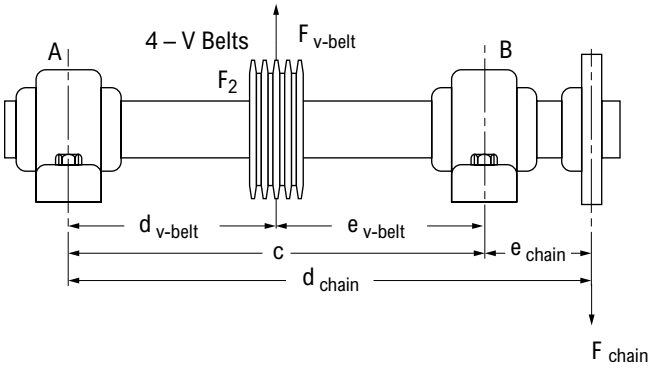

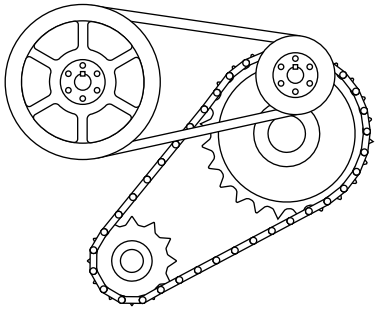

Operating Data	Symbol	Value
Horsepower	HP	30
Speed	RPM	200
L_{10} Life required	-	80,000 Hrs.
"K" Factor	$K_{v\text{-}belt}$	2
"K" Factor	K_{chain}	1
Sprocket Pitch Dia	PD_{chain}	10"
Sheave Pitch Dia	$PD_{v\text{-}belt}$	15"
Bearing "A" to "B"	c	20"
Bearing "A" to sheave	$d_{v\text{-}belt}$	10"
Bearing "A" to sprocket	d_{chain}	30"
Bearing "B" to sheave	$e_{v\text{-}belt}$	10"
Bearing "B" to sprocket	e_{chain}	10"

Radial force on shaft from chain drive (f_{chain}) is calculated by using Formula (1).

$$F_{chain} = \frac{HP \times 126{,}000 \times K}{PD \times RPM} = \frac{30 \times 126{,}000 \times 1}{10 \times 200} = 1890 \text{ lbs.}$$

(**NOTE:** Chain pull in this case is downward)

Radial force on shaft from V-Belt power take-off (F_{vbelt}) is calculated by using Formula (1).

$$F_{v\text{-}belt} = \frac{HP \times 126{,}000 \times K}{PD \times RPM} = \frac{30 \times 126{,}000 \times 2}{15 \times 200} = 2520 \text{ lbs.}$$

(**NOTE:** V-belt pull in this case is upward)

Radial load on bearings is now determined by combining resulting loads from both chain pull and V-Belt pull using Formula (3) and (4).

Bearing "A"

Load from chain pull

$$F_a = \frac{F_{chain} \times e_{chain}}{c} = \frac{1890 \times 10}{20} = 945 \text{ lbs.}$$

(**NOTE:** F_a from chain pull is upward)

Load from V-Belt pull

$$F_a = \frac{F_{v\text{-}belt} \times e_{v\text{-}belt}}{c} = \frac{2520 \times 10}{20} = 1260 \text{ lbs.}$$

(**NOTE:** F_a from V-Belt is upward)

Combining both $F_{a's}$ and because both loads are upward add both loads to get total:

Total load on "A" = 945 lbs. + 1260 lbs. = 2205 lbs.

Bearing "B"

Load from chain pull

$$F_b = \frac{F_{chain} \times d_{chain}}{c} = \frac{1890 \times 30}{20} = 2835 \text{ lbs.}$$

(**NOTE:** F_b from chain pull is downward)

Load from V-Belt pull

$$F_b = \frac{F_{v\text{-}belt} \times d_{v\text{-}belt}}{c} = \frac{2520 \times 10}{20} = 1260 \text{ lbs.}$$

(**NOTE:** F_b from V-Belt is upward)

Combining both $F_{b's}$ and because one load is upward and one is downward, subtract to get total:

Total load on "B" = 2835 lbs. - 1260 lbs. = 1575 lbs.

Bearing selection will be based on Bearing "A" because it has the highest load of the two bearings. Referring to the Rexnord Roller Bearing Radial Load Rating Table, a size code 7 bearing has a rating of 3466 lbs. at 200 rpm and 80,000 hours life. Using the derating factor at the bottom of the table, a Normal Duty 2203 bearing has a rating of (1-.15) X 3466 = 2946 lbs. This exceeds the 2205 lbs. of equivalent radial load that was calculated for Bearing "A" so the 2203 is satisfactory. Therefore, a ZA2203 Normal Duty Pillow Block would be selected.

Using the formula and the C Rating, the bearings L_{10} life would be:

$$L_{10} = \frac{1 \times 10^6}{60 \times 200} \left[\frac{27{,}200 \times .85}{2205}\right]^{10/3} = 210{,}092 \text{ hours}$$

866-REXNORD/866-739-6673 (Within the US)
414-643-2366 (Outside the US)
www.rexnord.com

Why Choose Rexnord?

When it comes to providing highly engineered products that improve productivity and efficiency for industrial applications worldwide, Rexnord is the most reliable in the industry. Commitment to customer satisfaction and superior value extend across every business function.

Delivering Lowest Total Cost of Ownership

The highest quality products are designed to help prevent equipment downtime and increase productivity and dependable operation.

Valuable Expertise

An extensive product offering is accompanied by global sales specialists, customer service and maintenance support teams, available anytime.

Solutions to Enhance Ease of Doing Business

Commitment to operational excellence ensures the right products at the right place at the right time.

Rexnord Company Overview

Rexnord is a growth-oriented, multi-platform industrial company with leading market shares and highly trusted brands that serve a diverse array of global end markets.

Process & Motion Control

The Rexnord Process & Motion Control platform designs, manufactures, markets and services specified, highly engineered mechanical components used within complex systems where our customers' reliability requirements and the cost of failure or downtime are extremely high.

Water Management

The Rexnord Water Management platform designs, procures, manufactures and markets products that provide and enhance water quality, safety, flow control and conservation.

©2017 Rexnord
BR101-100EN 04/17